An Engineering Review of the Existing Steering Arrangement of the Sailing Vessel "Bluenose II"

Prepared for the Minister of Transportation and Infrastructure Renewal of the Province of Nova Scotia

FINAL REPORT – REVISION B – February 15th, 2016

Tom Degremont and Sam Howell,
Langan Design Partners, LLC

105 Spring St
Newport, RI 02840

T 401.849.2249
E info@langandesign.com

LANGANDESIGN.COM

1 Table of Contents

2 Introduction

The following report is an independent engineering review of the steering system of the sailing schooner "Bluenose II". The vessel is owned by the Province of Nova Scotia.

This report was commissioned by the Minister of Transportation and Infrastructure Renewal for the Province of Nova Scotia.

As part of a complete rebuild of the vessel, which occurred between 2010 and 2014, a new plate steel rudder and a rebuilt worm drive steerer were designed and built. Following the installation of the rudder it was discovered that the steering system as built was proving to be inoperable: the effort required to turn the wheel, and therefore the rudder, was too large for safe operation. Turning the rudder at the dock proved difficult and angles greater than 20 degrees were not achievable by a single helmsperson.

In 2014 a new hydraulic system was installed to allow the vessel to operate. This solution has proved workable but has given rise to concerns relating to reliability and complexity.

The goal of this engineering report is to describe the current configuration, review it in the light of the concerns discovered at launch, and to assess more broadly its impact on the operation, reliability and longevity of the vessel.

The authors have prepared a new steering system proposal based upon the findings of this review. This proposal can be found in a separate document entitled "Proposal for a Modified Steering System for Bluenose II".

The authors would like to make clear that this report is not concerned with the decisions that have led to the current design solution. This report is forward looking and takes as a starting point the current configuration.

Given that there are 3 different iterations of the vessel the following naming convention is being used in this report:

- Bluenose (1921) is the original vessel designed by William Roué
- Bluenose II (1963) is the replica built by the Oland Brewery
- Bluenose II (2014) is the reconstructed vessel at the center of this engineering review.

3 Description of current steering configuration

3.1 General steering arrangement

In this report the steering system is meant to include the following:

- The rudder itself including the rudder blade, the upper and lower rudder stocks and the gudgeons and pintles that serve to attach it to the vessel.
- The rudder tube which includes the upper and lower bearings
- The current steering system, in this case the hydraulically operated machinery situated on deck that controls the angle of the rudder
- The re-manufactured manual steering apparatus that was installed in 2014 and subsequently replaced with the hydraulic system

For a description of the terms used in this report please refer to figure 1 below.

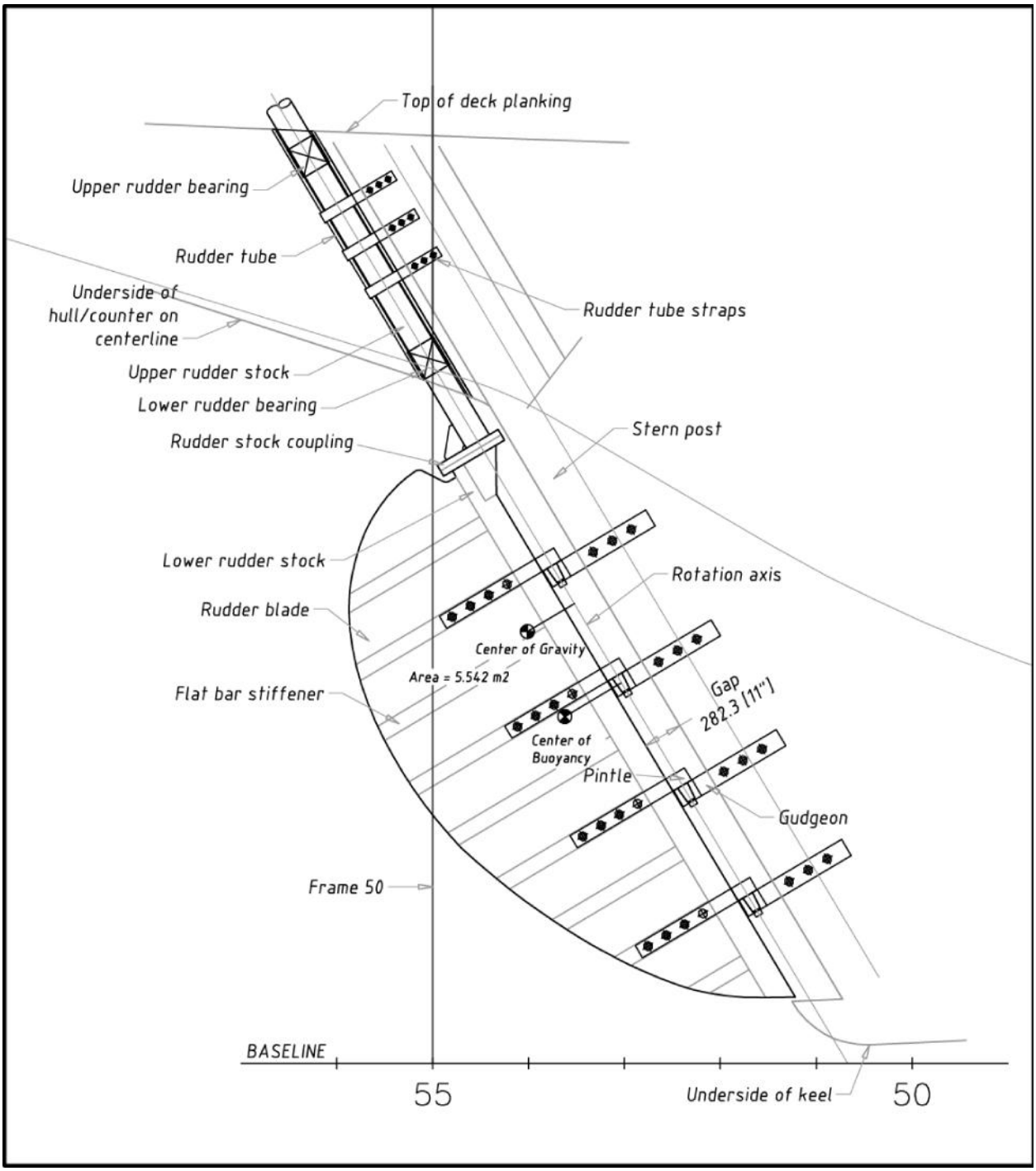

Figure 1 - Rudder Nomenclature

3.2 Construction of the rudder

The rudder blade is a steel welded fabrication consisting of a solid steel stock (7.5” solid round bar machined to 7.25” diameter) to which a flat 9/16th plate has been welded. The rudder plate is strengthened by 9 pairs of steel flat bar stiffeners (1-1/4” x 4-1/4”) that are welded on either side of the blade.

The rudder blade is attached to the upper rudder stock by way of a bolted connection.

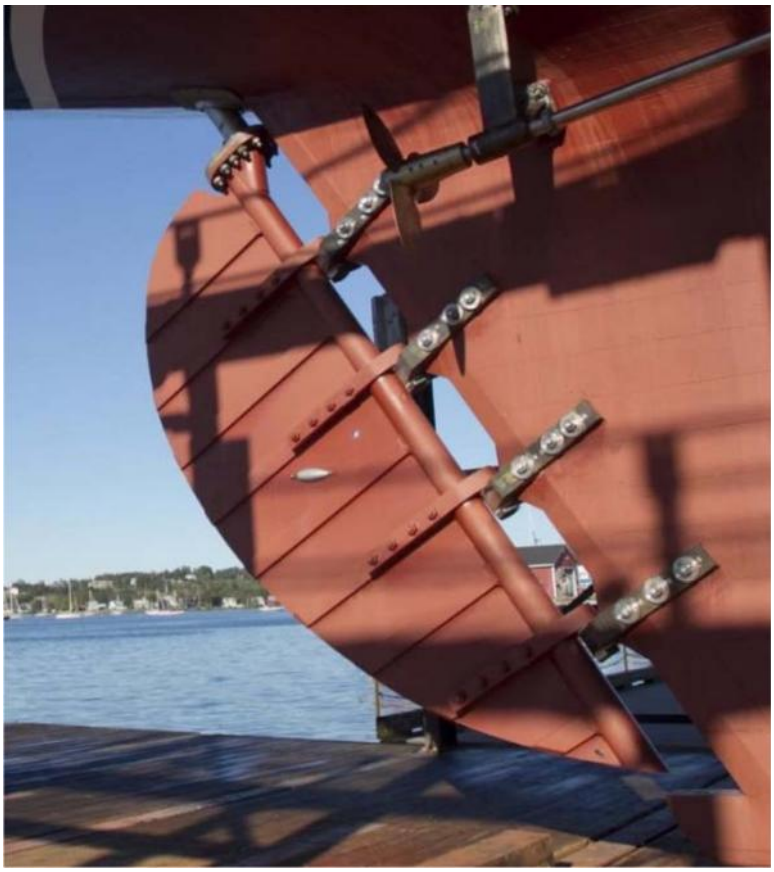

Figure 2:Existing Rudder

The upper stock is a solid stainless steel round bar (7.5” diameter). A flanged connection sits at the lower end of the upper stock. A keyway has been machined at the upper end of the stock to enable a solid mechanical connection to the steering system.

3.3 Attachment of the rudder to the vessel

The rudder is supported by a stainless steel bearing tube that sits inside of the hull and 4 hinges consisting of pintles and gudgeons along the stern post.

The rudder tube serves as a bearing carrier for both the upper and lower bearings. The bearings are supplied by Thordon and interference fit inside the machined rudder tube.

The tube carrying the bearings has metal flanges that are bolted to the vessel both at the hull and at the deck. It is also held into place by straps that connect it to the sternpost.

The pintles are affixed to the rudder blade by way of bolts. The gudgeons are similarly bolted to the stern of the vessel. The center of rotation of the hinges is intended to sit on the axis of rotation of the rudder. Note that the hinges sit perpendicular to the axis of rotation of the rudder, and at 31 degrees to the angle of the incoming flow.

The gudgeons are lined with Thorndon bearings and the rudder is prevented from vertical motion by way of lock nuts on the lower end of the pintle shafts. These lock nuts were hand-tightened upon installation of the rudder.

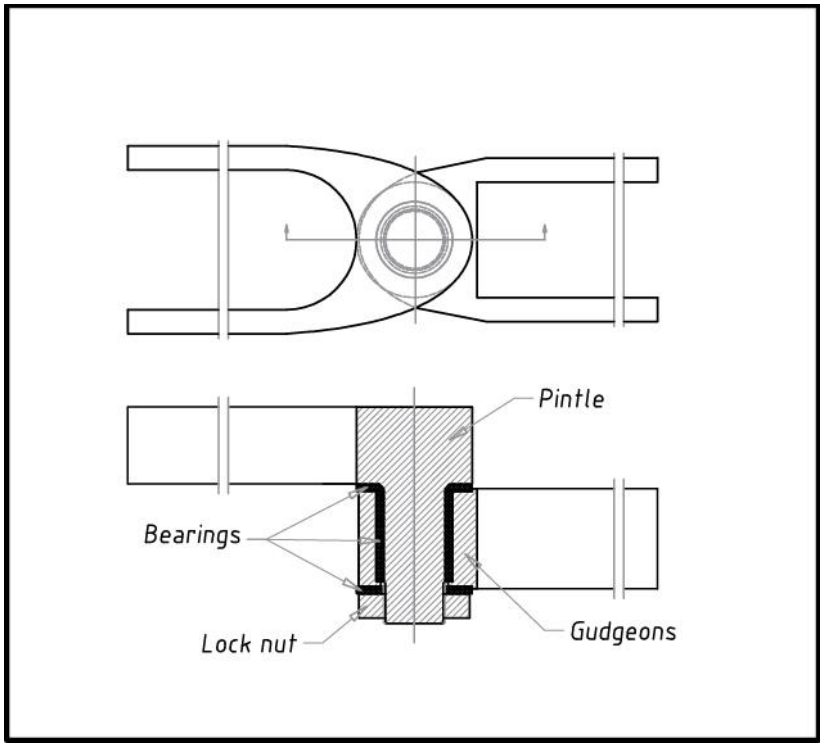

Figure 3: Pintle and Gudgeon Detail

3.4 Installed hydraulic steering system

The current steering system, as of the writing of this report, is a hydraulic steering system installed in late 2014.

The steering system makes use of the rudder stock “head” fabricated for the custom manual steerer that was installed at launch. A pair of dual-acting Kobelt hydraulic cylinders are attached to a base plate itself bolted on to the deck and to a custom tiller arm mechanism on the rudder stock head fitting.

The cylinders are actuated by a hydraulic power unit (HPU) that sits under the deck to port, and which is accessible via a deck hatch also on port.

The wheel is connected to a hydraulic steering pump which is connected to the HPU, thus translating the rotation of the wheel into the rotation of the rudder. The sensitivity of the wheel can be adjusted at the helm station.

In order for the HPU to deliver power it must be supplied with electricity. During normal sailing operations this power can be supplied by either one of the two electrical generators installed in the engine room. In the event that generators or the HPU unit fail the wheel can be used to directly operate the hydraulic cylinders albeit with a very large number of turns to angle the rudder from one side to the other. The hydraulic cylinders are connected in such a way as to provide some redundancy: in the event that one cylinder fails the other can be used on its own.

The steering system on deck is enclosed in a stainless steel fabricated framework which is clad in wood.

The following picture shows the current hydraulic system with the wood-clad enclosure removed.

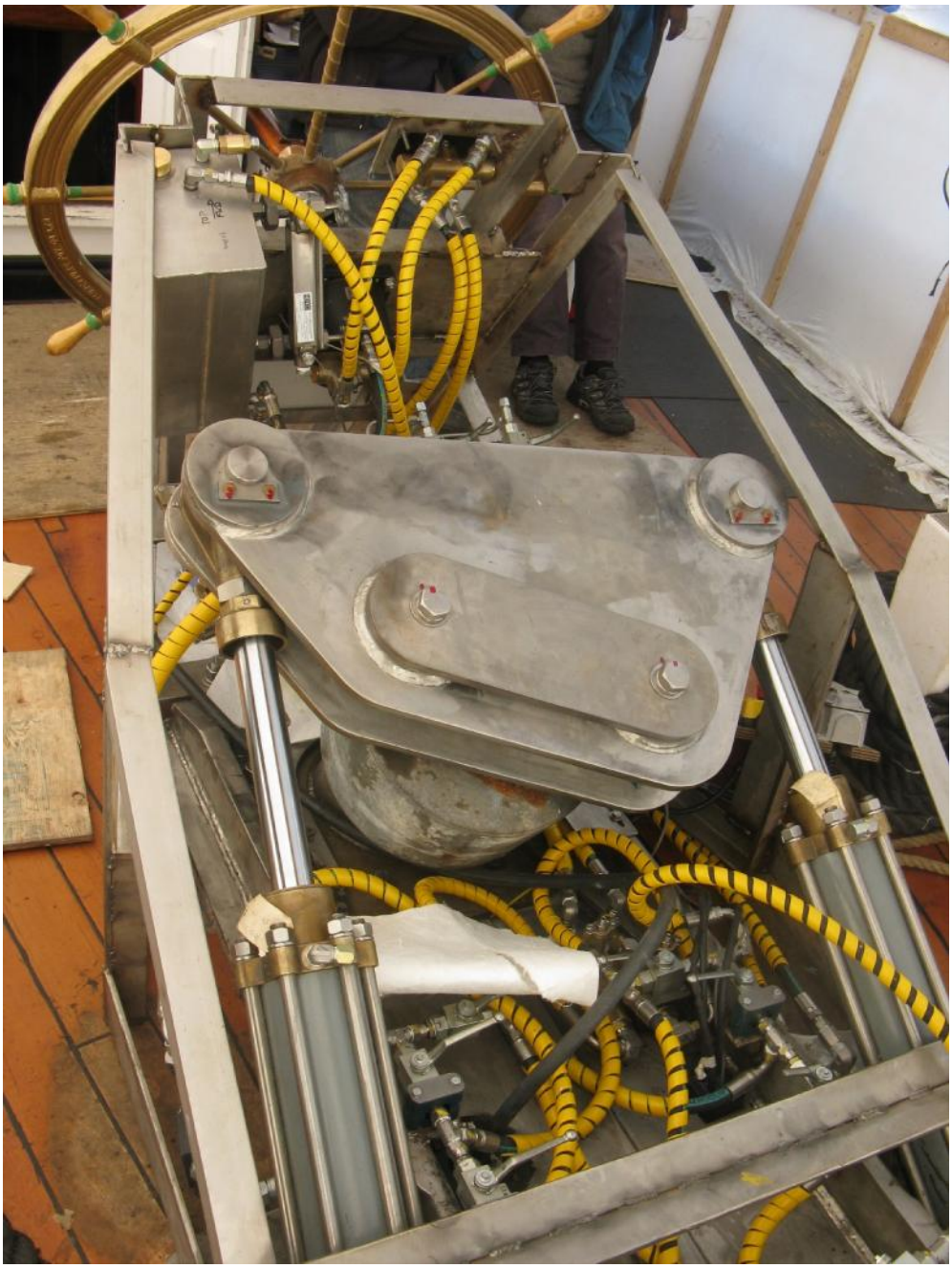

Figure 4: Existing Hydraulic System

3.5 Remanufactured worm gear steering system

As part of the design for the newly rebuilt Bluenose II a new manual steering gear was designed and fabricated. It was installed after the installation of the rudder in late fall 2014. The steering system was an oscillating worm gear of the "Fishermen's Steerer" style, similar in functionality to the "Edson Oscillating Steerer" found in various reference material. Note that this is called an oscillating steerer because the entire steering wheel shifts slightly from port to starboard as the wheel is turned.

This style of steering system was used extensively in the fleet of Atlantic fishing schooners as early as the 1860s. [Chapelle – The American Fishing Schooners].

This manual steerer is currently disassembled and stored at the *Fisheries Museum of the Atlantic*, alongside the old Bluenose II (1963) steerer in service between 1963 and 2005.

The following picture shows the manual steerer as it was installed on Bluenose II in early 2014.

Although this steering system is functionally identical to what was found on the fishing schooners of the day it is considerably larger and heavier, albeit designed to fit on a smaller diameter stock.

Figure 5: Manual steerer in 2014

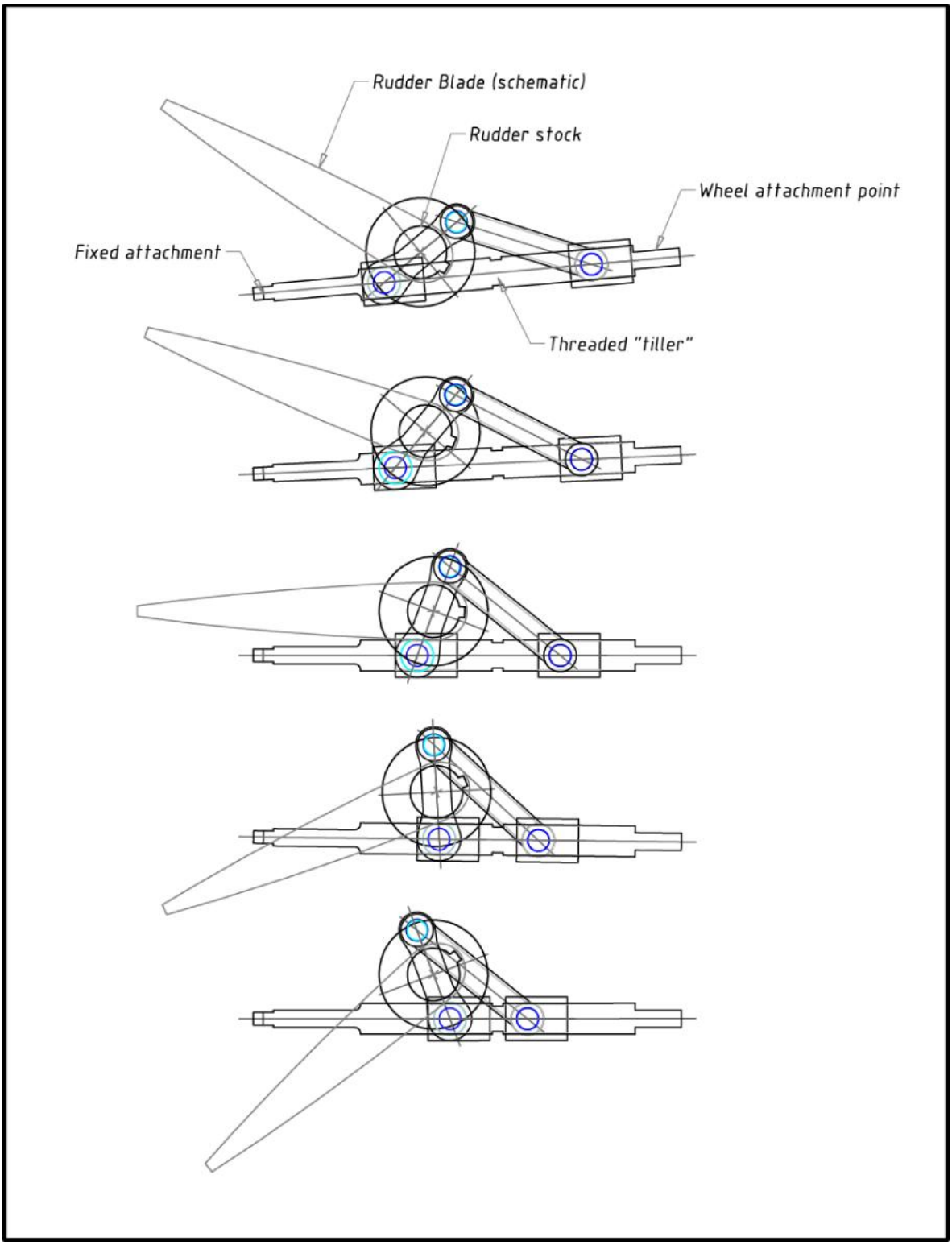

Figure 6: Oscillating Steerer Schematic

4 Issues at Launch and Potential Causes

When the newly restored Bluenose II was equipped with her new rudder it was quickly discovered that it took a significant effort at the wheel to rotate the rudder. A typical person could not exert enough force to rotate the rudder any more than about 20 degrees to either side of centerline at rest. This made the steering of the vessel impossible and prevented her from sailing her first season. In late fall 2014 a hydraulic steering system was installed. This system was able to cope with the large forces required to actuate the rudder. This hydraulic system does not, however, address the underlying issues with the rudder.

The following discussion examines the possible underlying causes with the view of making a recommendation to fix these issues.

4.1 Quantifying the problem

Once it was clear there was a potential issue with the steering system several sets of measurements were taken in order to quantify the effort required to turn the rudder. The following table was provided to the authors of this report. It shows the measured torques that were applied to the rudder blade in order to rotate the rudder to pre-determined angles while the vessel was sitting at rest.

In the table below the "Initial" readings refer to the force required to overcome friction. The "resting" readings show the force required to hold the rudder at the specified angle.

Table 1: Measured Torques

	Average Torques (ft-lbs)					
Rudder Angle	Port Initial	Port Resting	Stbd Initial	Stbd Resting	Average *(ft-lbs)*	Average *(kg.m)*
5	**961**	**871**	**1004**	**975**	952.9	131.7
10	**1297**	**1257**	**1350**	**1359**	1315.7	181.9
15	**1660**	**1562**	**1781**	**1653**	1664.2	230.1
20	**1978**	**1944**	**2104**	**2085**	2028.0	280.4
25	**2353**	**2268**	**2366**	**2354**	2335.1	322.8
30	**2777**	**2705**	**2838**	**2653**	2743.2	379.3
35	**3028**	**2990**	**3226**	**3037**	3070.2	424.5
40	**3300**	**3221**	**3518**	**3355**	3348.8	463.0
45	**3535**	**3406**	**3716**	**3616**	3568.0	493.3

Using the numbers above and taking into account the diameter of the steering wheel at the handles (44") and the average mechanical advantage developed by the steerer (36.7) the measured torques translate to the operator loads in the table below. These loads are a measure of the effort required by the helmsman to turn the wheel.

Table 2: Calculated Force at the wheel

Rudder Angle	Measured Rudder Torque	Wheel Shaft Torque	Calculated Operator Load	
deg	*kg.m*	*kg.m*	*kg*	*Lb*
0	*83.3*	2.3	4.06	9.0
5	131.7	3.6	6.42	14.2
10	181.9	5.0	8.87	19.6
15	230.1	6.3	11.22	24.7
20	280.4	7.6	13.67	30.1
25	322.8	8.8	15.74	34.7
30	379.3	10.3	18.50	40.8
35	424.5	11.6	20.70	45.6
Note that the measured torque at 0 is an extrapolation of the measured data				

First-hand reports have suggested that the actual force required to turn the rudder was significantly greater than what is shown here – the table above would suggest that one person could swing the rudder to 35 degrees. This was not the case at trials. See the next section for a possible explanation.

4.2 Worm gear friction

The authors of this report were not provided with any data regarding the testing of the remanufactured worm gear steerer. It is therefore not possible to rely on any hard data as to the resistance to turning this steerer provides but the assumption, based on verbal reports, is that with *no load* the steerer offered no substantial friction resistance.

The nature of the manual steerer is such that one would expect its friction (resistance at the wheel) to increase as the loading on the rudder stock increases. Since the current rudder, even at 0 degrees, requires torque to be moved the steerer will also be contributing some friction at the wheel. This additional friction has not been accounted for in the table above and likely explains the reason the data above does not match first-hand accounts of the resistance at the wheel.

The geometry of the steering mechanism is complex and changes with rudder angle. For a graphical representation of this please refer to the description of the steerer in section 4.5 of this report.

The authors have calculated an approximate friction curve based on the existing steerer geometry and a coefficient of friction of 0.19 (C.O.F assuming steel-brass interface, greased). The graph that follows shows the results.

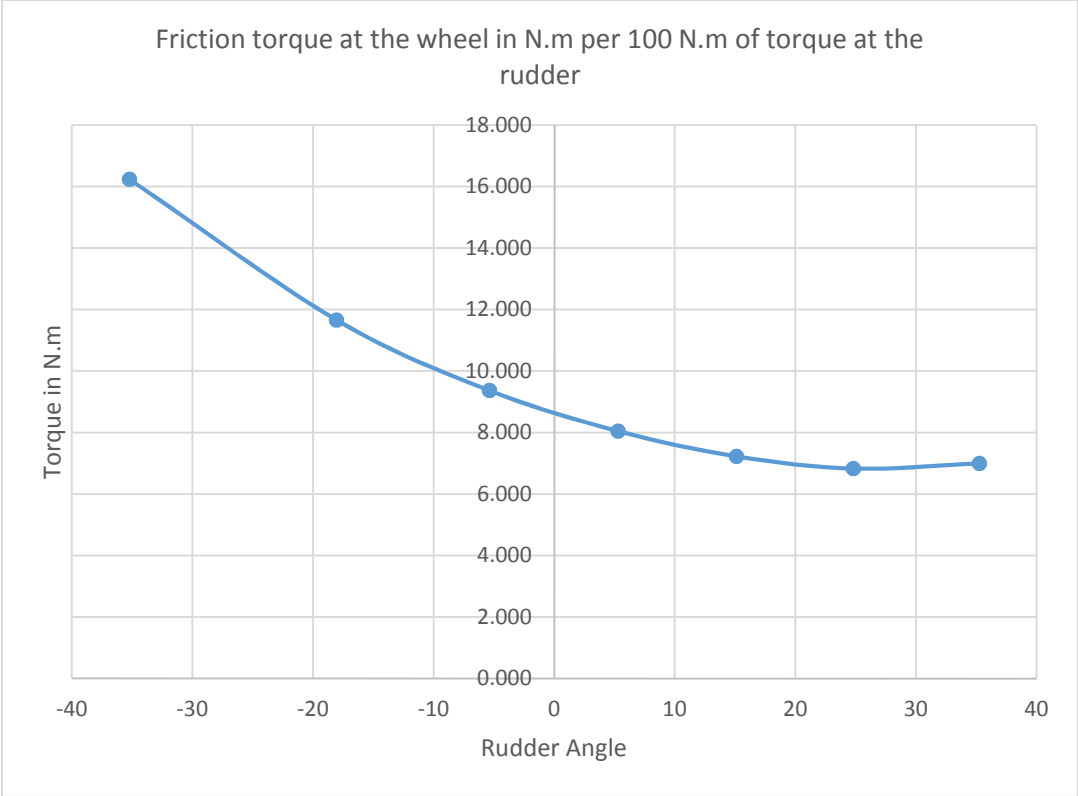

Figure 7: Steerer Friction Torque Per 100 N.m of Rudder Torque

For 100 N.m of torque at the rudder one would expect to see from 7 to 16 N.m of torque at the wheel shaft depending on the rudder angle.

Although several simplifying assumptions have been made for this calculation this number is surprisingly large. One of the takeaways from doing this quick calculation is that the diameter of the thread on the steerer rod, upon which the two nuts slide back and forth as the wheel is rotated, is a key driver of the friction torque felt at the wheel. The greater the diameter of the screw thread, the larger the torque required to overcome friction.

In the case of the newly remanufactured steerer the diameter of the rod screw is 4.25” to the outside of the thread, with a pitch diameter of approximately 3.938”. In the case of Bluenose II (1963) the thread had an outside diameter of 3”, and a pitch diameter of 2.683”. Based on these dimensions the torque needed to overcome the steerer friction would be 47% greater than using the original steerer.

It is important to note that some friction at the worm gear is normal, and indeed in some cases can be thought of as a feature. In this instance, however, the increased diameter of the screw shaft has a direct impact on the friction at the wheel: an increase of 47% is significant.

It is beyond the scope of this review to speculate about the reasons for this increased thread size, but it is likely that the increased size and shape of the rudder were contributing factors in the dimensions of the screw rod.

The following drawing shows the difference in size between the Bluenose (1963) and the Bluenose (2014) screw rods.

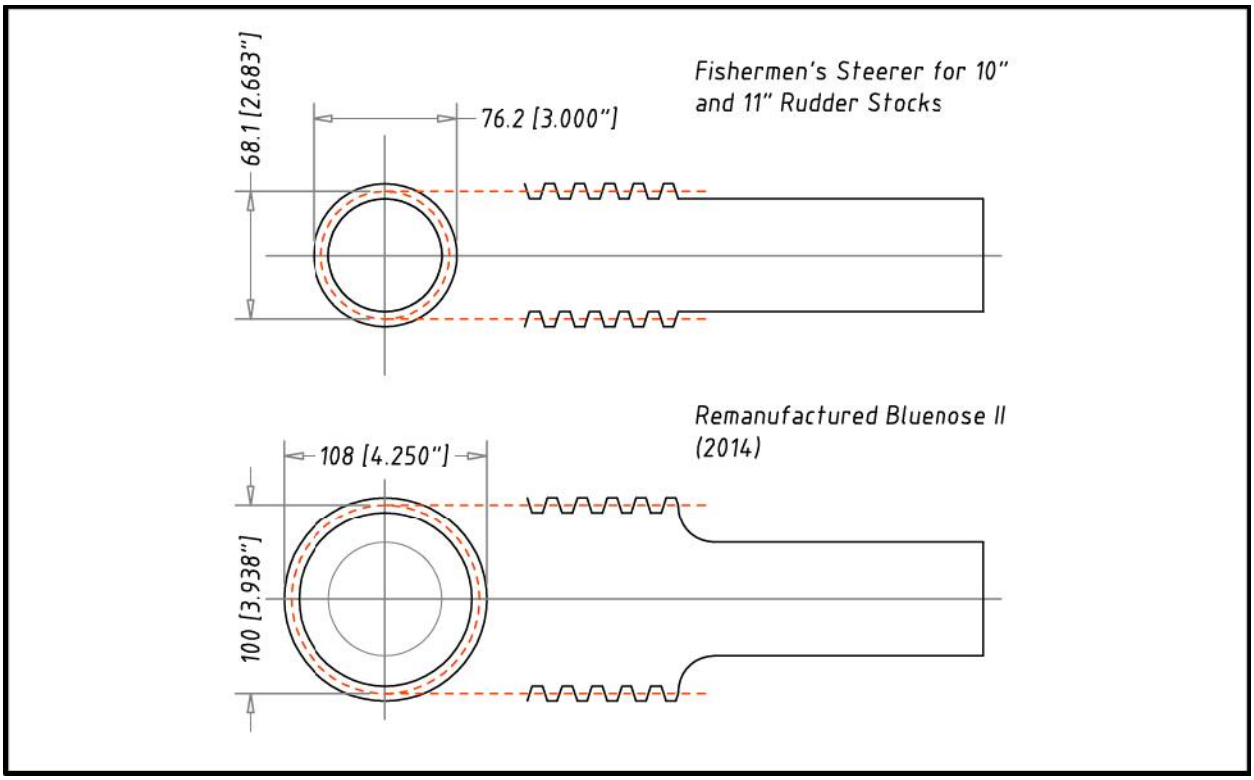

Figure 8: Worm Gear Thread Size Comparison

4.3 Rudder bearings and bearing tolerances

The rudder is held in place by two means: a rudder tube inside the hull and 4 hinges along the length of the rudder blade. In each of these locations a set of bearings has been installed that are intended to reduce the bearing friction between the stainless steel stock and the rudder tube, and between the pintles and gudgeons.

These bearings are specified as a being Thordon SXL bearings and were fabricated as per the manufacturer's instructions. Specifically, the clearance on the diameter between the bearing and the rotating rudder stock was specified as 60 Mil (0.060 inch, 1.5 mm). After an initial installation in which it was found that the total clearance on the diameter was 0.018" the bearings were removed and machined to a .060" clearance. It should be noted that the ABS rules specify a *minimum* bearing clearance of .060" and a maximum axial alignment of 15 Mil (.015 inch, 0.381 mm).

The bearing supplier typically specifies this same clearance (60 Mil) but is open to larger tolerances in specific instances with the possible drawback of some play in the rudder if the clearance is excessively large, and some potential loss of service life for the bearings.

The illustration below shows a section through one of the rudder tube bearings. For a detail of the pintle/gudgeon arrangement please refer to the illustration found in a previous section.

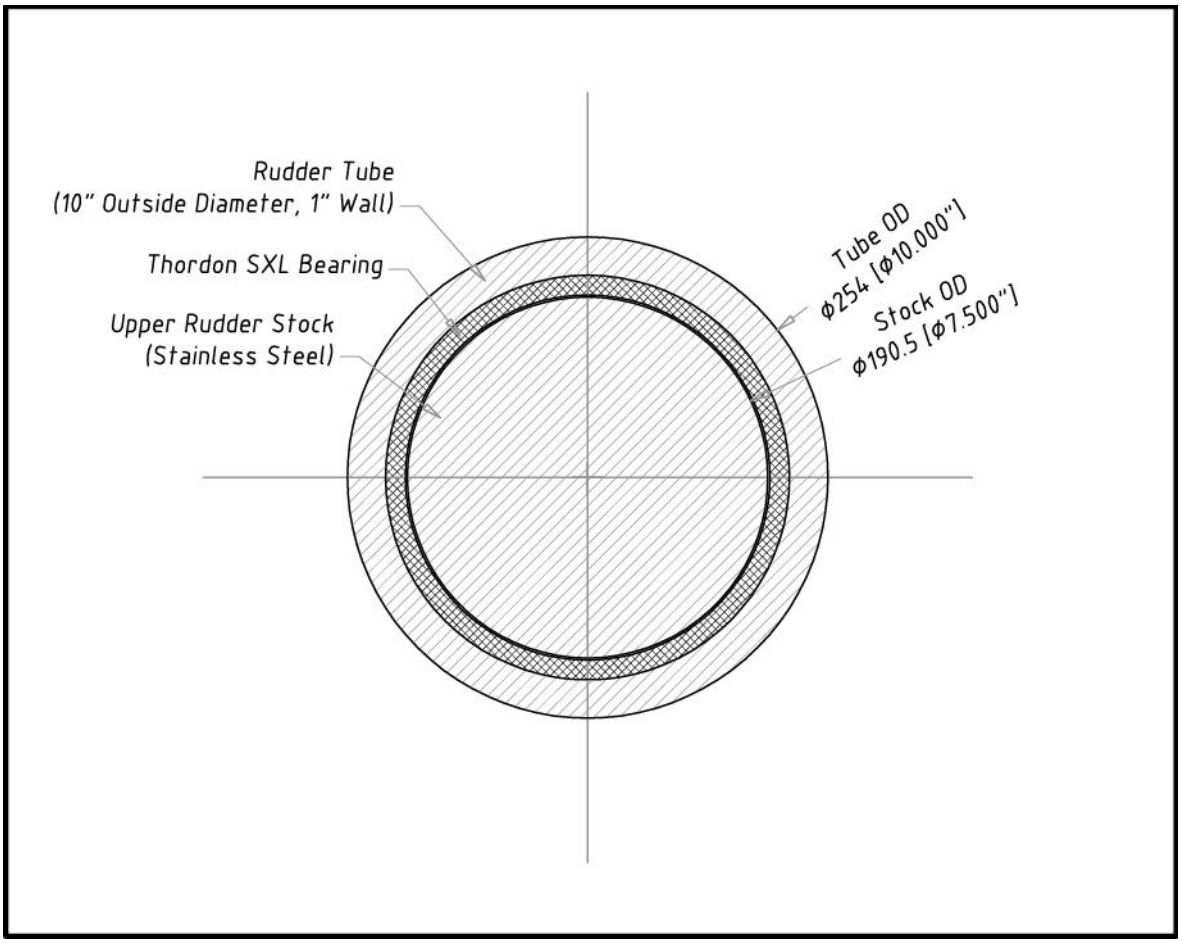

Figure 9: Section through the rudder tube bearing

One possible explanation for the excessive resistance to turning could be attributed to insufficient clearances between the bearings and the rudder stock and pintles. The manufacturer of the bearings (Thorndon) made clear that the 60 Mil clearance required was in part to accommodate for the swelling of the bearings when they are immersed in water. If one assumes some swelling, then the available clearances are further reduced.

Using the coefficient of friction supplied by Thordon (0.25-0.35), and assuming that the reduced clearance has no influence, one can calculate the approximate torque required to rotate the rudder simply due to the bearing friction. This works out to be approximately 698.5 N.m (71.2 kg.m, 515 ft.lbs) in ideal conditions. For details of this calculation please refer to appendix D.

This friction is due entirely to the weight of the rudder assembly resting on the bearings.

4.4 Misalignment and/or movement of the hull

It was established previously that the final installed bearing clearance was measured to be 60 Mil. If one relates this clearance to the total shaft length this corresponds to a dimensional tolerance of 1.5 / 6145 = 0.024%.

Given that Bluenose II (2014) is a wood vessel it is fair to assume that there will be some overall structural changes in shape as conditions change: going from being hauled out on a slipway to in the water, from cold conditions to warm, and some long term distortions over time (hogging).

The following table shows the impact of a slight misalignment at the flange coupling between the upper and lower rudder stocks (which is the same as a slight angle between the upper bearing tube and the gudgeons on the stern post). A 0.05 degree angle at the flange coupling yields displacements on the order of 1.5 mm at the upper bearing, and 3.3 mm at the lower pintle. These displacements are significantly greater than the available clearances at the bearings.

Table 3: Effect of stock misalignment

	Distance from coupling (mm)	**Offset at bearing (mm)**	**Offset at bearing (mm)**
Angle at flange coupling (degrees) =		0.05	0.1
Upper Bearing	1685	1.47	**2.94**
Lower Bearing	733	0.64	1.28
Hinge 1	-1058	-0.92	-1.85
Hinge 2	-1973	**-1.72**	**-3.44**
Hinge 3	-2887	**-2.52**	**-5.04**
Hinge 4	-3802	**-3.32**	**-6.64**

It seems likely to the authors of this report that at some point during the life of the vessel a distortion could take place, most likely an angular change between the angle of the rudder tube and that of the lower sternpost.

This small change in geometry would mean that the bearings are no longer working with the required clearances. In fact, it is likely that the bearing loads would increase dramatically: as the ship's structure is trying to bend the rudder stock (or straighten it if the rudder stock itself is out of alignment) the load on the bearings increases, with a proportional increase in the bearing friction.

4.5 Self-weight and lack of buoyancy

As was described in a previous section of this report the rudder blade and stock are made of solid steel plate, flat bar and round solid stock. The total weight of the rudder, not including the worm gear steering head, is shown in the table below.

Table 4: Existing Rudder System Weights

Steel Items		
Lower Stock (round bar)	928.2 kg	2046.2 lb
Lower Palm	40.7 kg	89.7 lb
Rudder Blade (flat plate)	531.3 kg	1171.4 lb
Stiffeners (flat bar)	567.0 kg	1250.1 lb
Bracket (flat plate)	9.5 kg	20.9 lb
Pintles	285.9 kg	630.4 lb
Stainless Steel Items		
Upper Stock (round bar)	657.6 kg	1449.6 lb
Upper Palm	2.6 kg	5.7 lb
Upper Palm Bracket	2.1 kg	4.6 lb
Total Dry Weight	3024.9 kg	6668.7 lb
	328.4	724.0 lb
Total Wet Weight	2696.5 kg	5944.7 lb

When the rudder is installed and the vessel is floating the immersed portions of the rudder generate some buoyancy. This buoyancy is accounted for in the table above, giving a total “wet” weight of 2696.5 kg. This is the weight that is supported by the vessel.

Furthermore because of the pronounced rake of the rudder stock (31 degrees) any angle given to the rudder implies that the blade be “lifted”, requiring the application of some torque to the rudder stock.

The “lifting” torque required is proportional to:

- the weight of the rudder
- the distance between the center of gravity of the rudder and the rudder stock
- the amount of buoyancy in the blade available to counter-act the downward force due to gravity.

Since the existing rudder has very little buoyancy there is very little reduction in the torque required.

The way the existing rudder is designed implies that there will always be some force needed to turn the rudder away from centerline. An alternative design and building material would have a direct impact on these forces. Note that these concerns are relevant only when the vessel is at rest. The loads generated by the rudder while sailing come in addition to these “static” loads.

4.6 Preliminary Conclusions

The following table summarizes the contributions to the torque required to turn the rudder at rest.

This table makes apparent that if one adds up the contributions from weight, buoyancy and friction one can account for approximately 90% of the actual measured torque required to turn the blade.

In fact, given the experimental setup used to record the torque, one can partially explain the discrepancy found between the predicted and measured torques: As a load is applied to the tiller (used to turn the rudder during the test) the net reaction forces increase on the upper bearing. This additional load would result in additional friction and would increase with rudder angle. The authors were not provided with the exact geometry of the tests so quantifying this additional friction was not possible.

Table 5: Predicted vs Actual Rudder Torques

Rudder Angle	Weight	Buoyancy	Predicted no friction	Friction	Total Predicted	Actual (Measured)	Difference	
deg	*kg.m*	*kg.m*	*kg.m*	*kg.m*	*kg.m*	*kg.m*	*kg.m*	
0	0.0	0.0	0.0	71.2	71.2			
5	53.1	-6.9	46.1	71.2	117.3	131.7	*14.4*	89%
10	105.8	-13.8	91.9	71.2	163.1	181.9	*18.8*	90%
15	157.7	-20.6	137.0	71.2	208.2	230.1	*21.9*	90%
20	208.3	-27.3	181.1	71.2	252.3	280.4	*28.1*	90%
25	257.4	-33.7	223.8	71.2	295.0	322.8	*27.8*	91%
30	304.6	-39.9	264.7	71.2	335.9	379.3	*43.4*	89%
35	349.4	-45.7	303.7	71.2	374.9	424.5	*49.6*	88%

What this data suggest is that most of the effort required to turn the rudder is in fact due to the design of the rudder and the steering gear. Specifically, the three contributors are:

- the weight of the rudder which is the cause of substantial friction throughout the range of motion of the rudder

- the lack of buoyancy and weight in the blade which is driving the significant torque required to lift the weight of the rudder as it rotates around the angled shaft.

- The increased diameter of the worm gear screw contributes to approximately 47% more friction under load than was the case for Bluenose II (1963).

The data would suggest that alignment issues did not play a significant role at the time the measurements were taken.

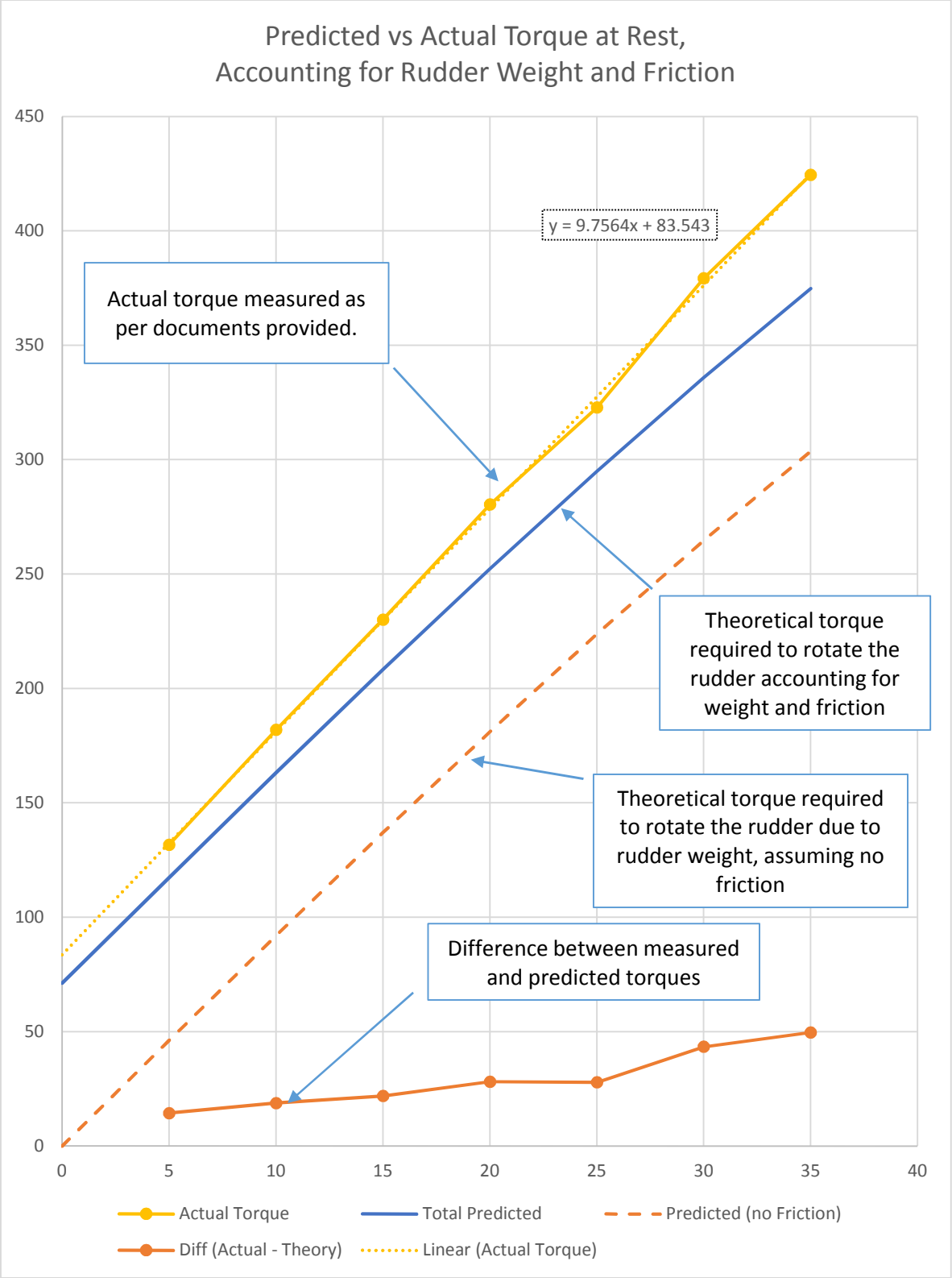

Figure 10: Torque Curves

5 Other Concerns and Considerations

A stated goal of this report, in direct response to the goals listed in the original RFP, was to take a broader look at the current steering configuration.

The previous section has found that the rudder seems to be operating as designed: the weight of the rudder implies high levels of bearing friction, and the lack of buoyancy means significant torque is needed to swing the rudder from centerline to either side.

The effort required at the wheel was too large to operate the vessel safely and an alternate steering system was installed. The vessel is now steered using a hydraulic system.

5.1 Long term impact of the weight of the steering system

In order to account for the total weight of the existing steering system one has to consider not only the weight of the rudder itself, but that of the other steering components. For details of the weights that were removed and added while switching to a hydraulic system please refer to appendix A.

The table below shows a tally of the different steering configurations and their respective weights. This table includes the original Bluenose (1921), Bluenose II (1963), the new Bluenose II (2014) with manual steerer, and Bluenose II (2014) with hydraulic steering.

Table 6: Total Steering Weight Comparison

	Bluenose (1921) & Bluenose II (1963)	Bluenose II (2014)	Bluenose II (2014)
	Wood rudder, Fishermen Steerer	Metal Rudder, New Manual Steerer	Metal Rudder, Hydraulic Steerer
Rudder (wet)	150.0 kg*	2696.5 kg	2696.5 kg
Steering System	250.0 kg**	566.4 kg	1764.8 kg
Total Weight	400.0 kg	3262.8 kg	4461.3 kg
	881.8 lb	7193.3 lb	9835.3 lb

(*) The wet weight used is taken from first-hand accounts of the rudder being neutrally buoyant. The wet weight estimate here assumes that a portion of the wood stock is above the water.

(**) This weight is an estimate based on visual observation of the former steering gear.

This tables makes quite clear the dramatic increase in weight in the switch from the old steering configuration to the new. Not to make the point too dramatically the additional weight (4061 kg) is the equivalent of almost 48 people standing on the aft deck in way of the rudder.

The impact of this additional weight can be estimated in numerical terms by calculating the shear force and bending moment distribution along the length of the vessel. Please refer to Appendix C for graphs that show how these forces are distributed for Bluenose II.

One should note that some shear forces and bending moments are to be expected in any vessel of this shape - they come about because the distribution of weight along the length of the vessel is not matched by the distribution of buoyancy. Both the bow and the stern aren't supported by any immersed volume so they impose on the ship's structure both a shear force and a bending moment to counter the downward pull of gravity.

On the short term the structure of the vessel can easily accommodate these forces. The issues arise over time: the continuous stress on the wood structure means it slowly deforms and "hogs". This condition is typical of older wood vessels. For a dramatic depiction of hogging on the original Bluenose II please refer to Appendix B.

On Bluenose II (2014) the issue becomes amplified because of the excessive weight of the rudder and the steering system. The graphs in Appendix C show that the shear force in the stern of the vessel increases substantially, on the order of 35% to almost 50% depending on the location.

The impact on bending moment is also substantial and the increase is not limited to the stern – amidships the bending moment increase is about 10% increasing to about 35% around the location of the rudder.

Although the hull structure was significantly strengthened and reinforced during the reconstruction of the Bluenose II (2014) to resist hogging, the additional forces that come from the heavy steering solution are working against these efforts. The data show that this increase is substantial and can only be assumed to be detrimental on the long run.

There is no simple way of calculating the rate of hogging over time so quantifying the impact on the 50-year lifespan of the vessel is not possible. **It is of the opinion of the authors of this report that the magnitude of the increase is substantial enough to be a concern**.

5.2 Reliance on ship power for steerage

As was mentioned in a preceding section the hydraulic system is dependent on the power generated by either of the two generators on board. The generators supply the hydraulic power unit (HPU) with electricity, and the HPU provides the hydraulic pressure to actuate the hydraulic cylinders. This system has proved functional during the 2015 season however the following should be noted:

- The system is complex with several points of failure requiring the vessel's engineer to be on permanent standby should a failure occur.
- In the event of an emergency the hydraulic system can be operated in manual mode - in the case of electrical failure for example. The number of turns required to turn the rudder from one side to the other in this mode is very large, making actual steering difficult, but not impossible.
- One of the generators needs to be running at all times to ensure adequate steerage. Although there is some redundancy built-in as either of the generators can be used this doesn't compare

favorably to a manually steered vessel. [Note: Although not directly related to the steering issue the generators are noisy – this does not help the passenger experience].

5.3 Impact of the large gap between the blade and the stern post

The best practice on most sailing vessels of this kind is to attempt to reduce to a minimum the gap between the rudder and the stern post in order to keep the flow as streamlined as possible.

The current design, however, has a large gap between the stern post and the leading edge of the rudder. This gap is about 11” wide.

There are very specific circumstances where such a gap could be beneficial: if one wanted to produce maximum lift on the rudder itself, albeit at the cost of higher drag. In order to achieve this high lift, the shape of the rudder itself would have to be carefully designed to ensure late flow separation on the suction side, and the blade would need to rotate out of the perturbed flow behind the keel. Neither of these requirements are met with the current configuration, nor would such a design be warranted for this type of vessel where drag is an important consideration.

Another direct result of the large gap between the rudder and the stern post is an increase in the distance between the center of effort of the rudder blade and the axis of rotation of the rudder. The implication is that the effort required to turn the rudder when at speed is greater, with no meaningful improvement in the turning power of the rudder. The impact is not only on the helmsman – it has a direct impact on the scantlings required to build the rudder. Reducing the gap means less torque on the rudder post, which in turn means a lighter rudder.

5.4 Impact of blade construction and hardware on performance

For as long as boats have been built it has been a concern for boat builders and designers to try and reduce the resistance it takes to propell a vessel through the water. This is typically achieved by ensuring that the flow of water along the hull, keel and rudder is as smooth and streamlined as possible. Any disruption in the flow generates turbulence, which increases drag and reduces the ability to generate lift. More drag means less speed. What is immediately apparent when looking at the current configuration is that the current arrangement presents many obstacles to the flow:

- The gudgeon braces have not been recessed into the stern post to reduce their protrusion into the flow. This is particularly relevant since they sit at a pronounced angle relative to the incoming flow.
- The solid steel bars that stiffen the rudder plate sit at 31 degrees to the flow. This can be expected to cause a significant disturbance to the flow to the point that almost no portion of the rudder blade will be operating in steady streamlined flow
- The front edge of the rudder blade consists of a tube. This can be expected to create substantial flow separation both along the front edge of the tube itself as the flow attempts to accelerate around the tube, and behind the tube creating a significant area of turbulence on the forward portion of the rudder blade.

In the case of a rudder the impact is more significant: not only is the drag substantially increased the ability of the rudder to create lift is negatively impacted as very little of the rudder is seeing smooth flow.

These concerns do not mean that the rudder can't produce enough lift to turn the vessel. A successful sailing season proves that this rudder is operating. What they suggest is that the efficiency of the rudder is substantially less than what it should be.

One can objectively say that the current rudder meets the functional definition of a rudder: it serves the purpose of turning the vessel when underway. It does, however, stand in stark contrast to most accepted best practices for the design of sailing vessel rudders.

As was noted in the introduction this report is not concerned with the decisions that lead to the current design. An investigation of this kind would likely shed some light on the reasons this solution was adopted, one of which may have been an attempt to simplify the design to reduce cost while meeting the requirements specified by ABS.

Subjectively it is the opinion of the authors of this report that the current design is out of place on a vessel built to bring back to life one of the most notable designs of the early 20th century, and whose reputation was built upon exceptional speed.

5.5 Impact of blade shape and surface area on steering forces

The following drawing shows a comparison between the current metal rudder blade and the Bluenose (1963) wood rudder.

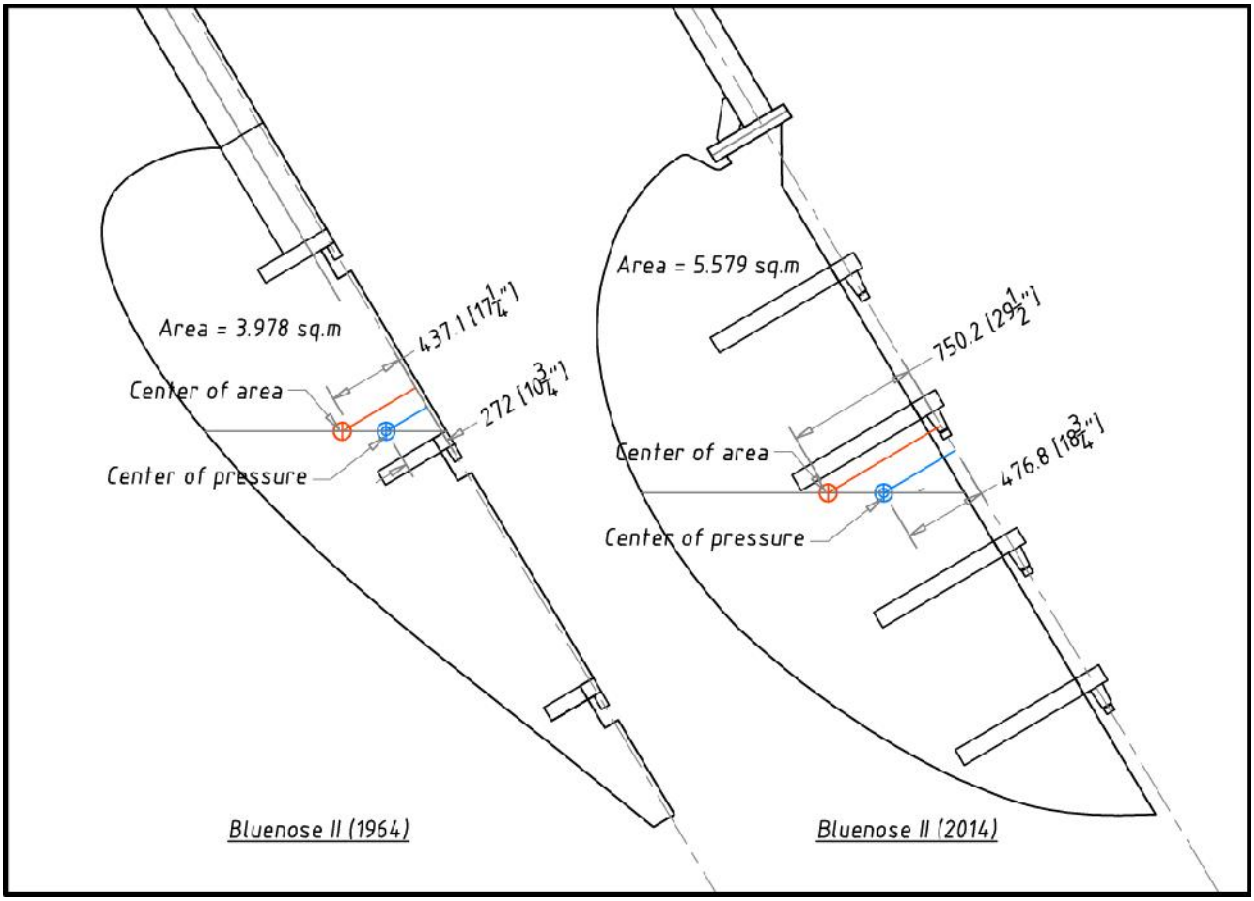

Figure 11: Rudder Shape and Size Comparison

It is immediately apparent that the new rudder is both substantially larger than the Bluenose II (1963) rudder (+40.3%) and that its center of area sits farther away from the axis of rotation of the rudder (+71.6%).

The increase in rudder area means that the rudder can develop 40.3% more force than the smaller rudder, should this be a desired goal. From first-hand accounts Bluenose II (1963) did not suffer for insufficient rudder area.

The large increase in the distance between the axis of rotation and either the center of area or the center of pressure (+71.6% and +75.4% respectively) means the effort to rotate the rudder is substantially increased. This means that for a 40.3% increase in rudder force the torque required to hold the rudder increases by 140%.

This large increase in torque could be handled by modifying the pitch ratio of the worm gear steerer. The result would be that the rudder would take more rotations at the wheel. This would not, however, reduce the worm gear friction resulting from the excessive torque.

The vessel must meet the requirement set forth by Transport Canada, namely being able to turn the rudder from 35 degrees to one side to 30 degrees on the other within 28 seconds.

First-hand accounts from the captain confirms that Bluenose II (1963) could comfortably meet this requirement, completing the rudder swing well within the 28 seconds required. The authors believe that all other issues aside it would be very difficult to meet this requirement with the current rudder shape and size and a manual steerer with a finer screw pitch.

6 Conclusion

The following is a summary of the findings of this report:

- The large forces required to manually turn the existing Bluenose II rudder are mostly a function of its design.

- The weight of the rudder induces significant friction at the upper, lower and gudgeon bearings throughout the range of rudder angles.

- The weight of the blade and its lack of buoyancy imply that significant torque must be applied to the rudder in order to "lift" the blade on either side of centerline, even when the vessel is at rest.

- The increased diameter of the screw thread and resulting increase friction of the re-manufactured manual steerer has significantly increased the force required to turn the rudder.

- The small clearances between the rudder stock, rudder pintles and their respective bearings could be a cause for additional friction should the vessel deform over time.

- The weight of the current steering system (rudder + hydraulic steering) is producing a significant increase in the amount of shear force and bending moment in the aft portion of the vessel. This excessive weight will have an impact on the vessel's long term ability to resist hogging.

- The hydraulic system required to operate the rudder is heavy, complex and less reliable than a manual solution

- Steering the vessel requires that one of the generators be running all the time.

- The construction of the blade, and the presence of a large slot between the rudder blade and the stern post, is negatively affecting the performance of the vessel by creating unnecessary drag.

- The size and shape of the blade are creating unnecessarily large steering forces while sailing

Given that these issues are a direct result of the design of the rudder there does not appear to be a simple solution to fix these while retaining the existing rudder stock and blade.

It is of the opinion of the authors of this report that the Province of Nova Scotia should consider alternative steering arrangements for Bluenose II.

The design objectives of a new steering arrangements should be:

- To significantly reduce the weight of the rudder to reduce friction and reduce the strains being placed on the structure of the vessel

- To create a streamlined rudder blade to improve performance and to create enough buoyancy to counter the potential effort required to “lift” the blade.

- To increase bearing tolerances, or to consider alternative bearing configurations, in order to reduce the possibility of future friction as the geometry of the vessel changes with time.

This newly designed rudder should enable **a return to a manually steered system** that will provide better performance, easier handling, and more reliability. It will also create a more historically accurate experience for the vessel’s passengers.

7 Appendix A – Weights Removed and Added When Switching to Hydraulic Steering

The tables below were provided to the authors of this report. Presumably this weight tally was developed at the time of the switch from manual to hydraulic steering.

7.1 Weights Removed

These are parts of the manual steerer that were removed before installing the new hydraulic steering.

Steering Gear		
Heel bearing	34.5 kg	76.0 lb
Worm with Brass nuts	114.3 kg	252.0 lb
Two aft arms	23.6 kg	52.0 lb
Forward arms	16.3 kg	36.0 lb
Heel pock and bolts	39.0 kg	86.0 lb
Misc hardware	8.2 kg	18.0 lb
Enclosure		
Steering box	143.3 kg	316.0 lb
Steering box sill	45.4 kg	100.0 lb
Total Removed	424.6 kg	936.0 lb

7.2 Weights Added

These are the components of the new hydraulic system that were installed.

Structural Weight		
Deck Plates	247.7 kg	546.0 lb
Deck plate connection flat bar	6.8 kg	15.0 lb
Rudder flange bolt catcher	24.0 kg	53.0 lb
Longitudinal flat bar	95.3 kg	210.0 lb
Capston bolt catcher	9.5 kg	21.0 lb
Triangular rear gussets	11.8 kg	26.0 lb
Pocket plate system	108.9 kg	240.0 lb
Under deck support girders	101.6 kg	224.0 lb
Weld + fittings	45.4 kg	100.0 lb
HPU base and seat	18.1 kg	40.0 lb
Old reservoir base and seat	18.1 kg	40.0 lb
Fasteners	45.4 kg	100.0 lb
Hydraulic Equipment		
Followup and feedback	18.1 kg	40.0 lb
Helm pump	17.2 kg	38.0 lb
Port relief	5.4 kg	12.0 lb

Tank, dry	158.8 kg	350.0 lb
Hydraulic oil	122.5 kg	270.0 lb
Cylinders	68.0 kg	150.0 lb
Pipe and Hose	45.4 kg	100.0 lb
HPU	68.0 kg	150.0 lb
Electrical Equipment		
Main panel	10.0 kg	22.0 lb
Remote panel	5.0 kg	11.0 lb
Cable	69.9 kg	154.0 lb
Enclosure		
Wood fastenings and coatings	161.5 kg	356.0 lb
Framing and seats	140.6 kg	310.0 lb
Total Added	1623.0 kg	3578.0 lb
Net Weight Increase	1198.4 kg	2642.0 lb

8 Appendix B – Long Term Effects of Shear Force and Bending Moments

The two pictures below show the long term effects of the shear forces and bending moments inherent in this type of sailing vessel. The weight of the bow and the stern are not supported by buoyancy. Over time these forces tend to deform the hull.

Note the graceful upward slope of the shear line both in the bow and in the stern of the vessel in the first picture which was presumably taken early in her life. The second picture shows the dramatic effect of age on this shape: the shear line has flattened, most dramatically in the stern.

Figure 12: Bluenose II (1963) circa 1964

Figure 13: Bluenose II (1963) circa 2000

9 Appendix C – Shear Force and Bending Moment Distribution

The two graphs that follow show the longitudinal distribution of shear force and bending moments for Bluenose II when at rest, in her lightship condition.

The following table shows the difference in these forces between the "historic" steering system which consists of a wooden rudder blade and a manual steerer, and the current steering system with its metal blade and hydraulic steering system.

Note that only the aft portion of the vessel is shown in the following table. For the development of these graphs the authors have assumed the weight of the vessel, minus the major weight items, was distributed proportionally to the section area at each station. The major weight items considered included: the ballast, engines, generators, masts, booms and the bowsprit.

	Historic		**Hydraulic**	
Position	Shear	Bending	Shear	Bending
m	*t*	*t.m*	*t*	*t.m*
15.5	*0.60*	*212.41*	*2.40*	*229.28*
16.5	*-3.60*	*210.97*	*-1.88*	*229.61*
17.5	*-8.07*	*205.15*	*-6.48*	*225.45*
18.5	*-12.27*	*194.99*	*-10.87*	*216.79*
19.5	*-12.35*	*184.78*	*-11.17*	*207.87*
20.5	*-16.75*	*170.31*	*-15.84*	*194.44*
21.5	*-20.50*	*151.50*	*-19.91*	*176.38*
22.5	*-19.10*	*131.39*	*-18.87*	*156.68*
23.5	*-16.38*	*114.08*	*-16.55*	*139.39*
24.5	*-12.52*	*99.49*	*-13.11*	*124.44*
25.5	*-9.48*	*88.58*	*-10.52*	*112.71*
26.5	*-7.71*	*80.50*	*-9.22*	*103.35*
27.5	*-9.99*	*71.60*	*-11.99*	*92.70*
28.5	*-11.59*	*60.71*	*-14.07*	*79.57*
29.5	*-12.24*	*48.78*	*-15.19*	*64.91*
30.5	*-11.36*	*36.66*	*-14.75*	*49.62*
31.5	*-10.25*	*25.72*	*-14.01*	*35.10*
32.5	*-8.17*	*16.56*	*-12.18*	*22.03*
33.5	*-5.83*	*9.59*	*-8.71*	*11.64*
34.5	*-3.68*	*4.98*	*-3.95*	*5.17*
35.5	*-2.27*	*1.98*	*-2.27*	*2.29*
36.5	*-0.61*	*0.42*	*-0.61*	*0.51*
37.5	*-0.10*	*0.06*	*-0.10*	*0.14*

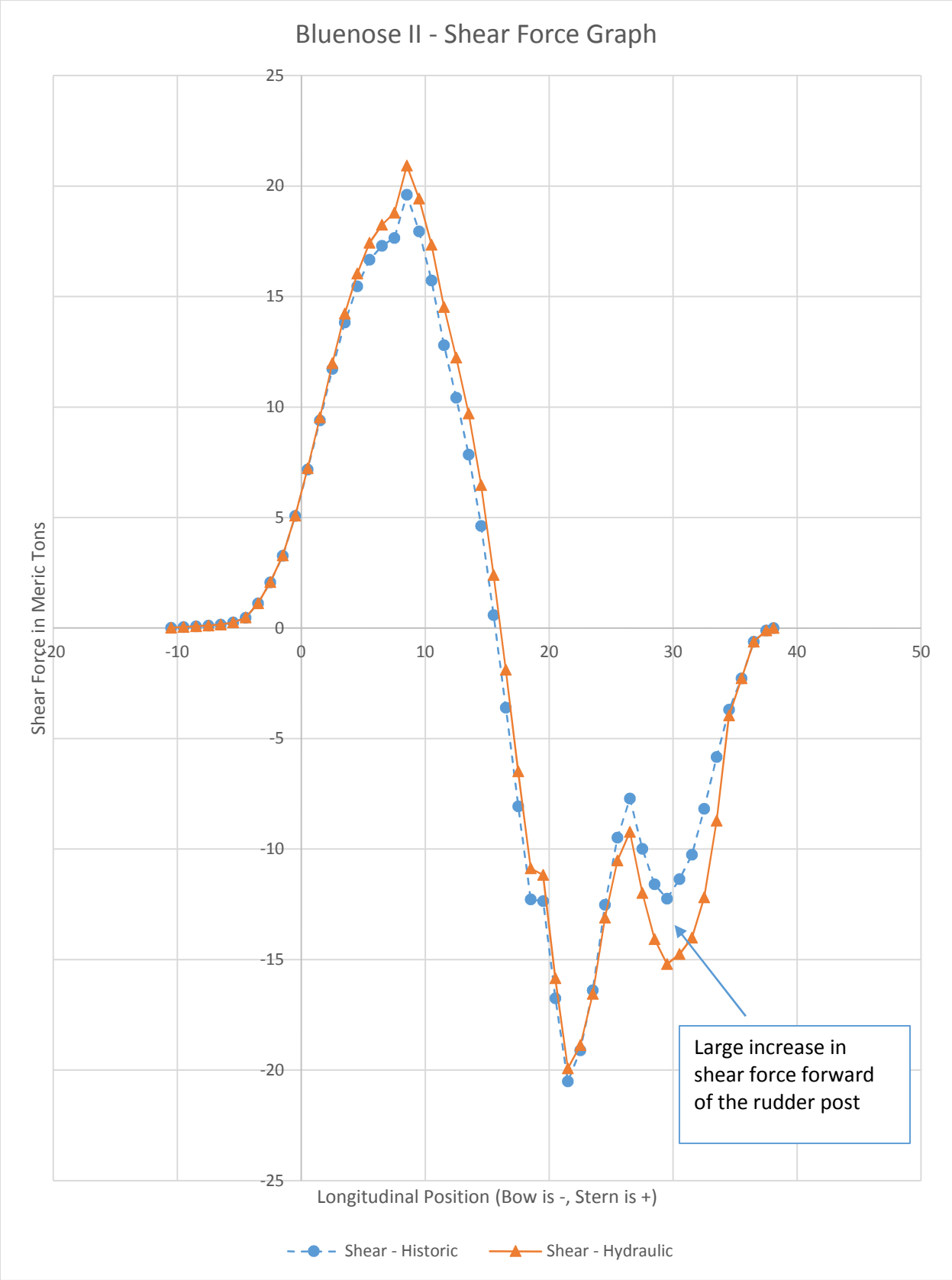
Bluenose II - Shear Force Graph
Shear Force in Meric Tons
Longitudinal Position (Bow is -, Stern is +)
25
20
15
10
5
0
-5
-10
-15
-20
-25
-20
-10
0
10
20
30
40
50
Large increase in shear force forward of the rudder post
Shear - Historic
Shear - Hydraulic

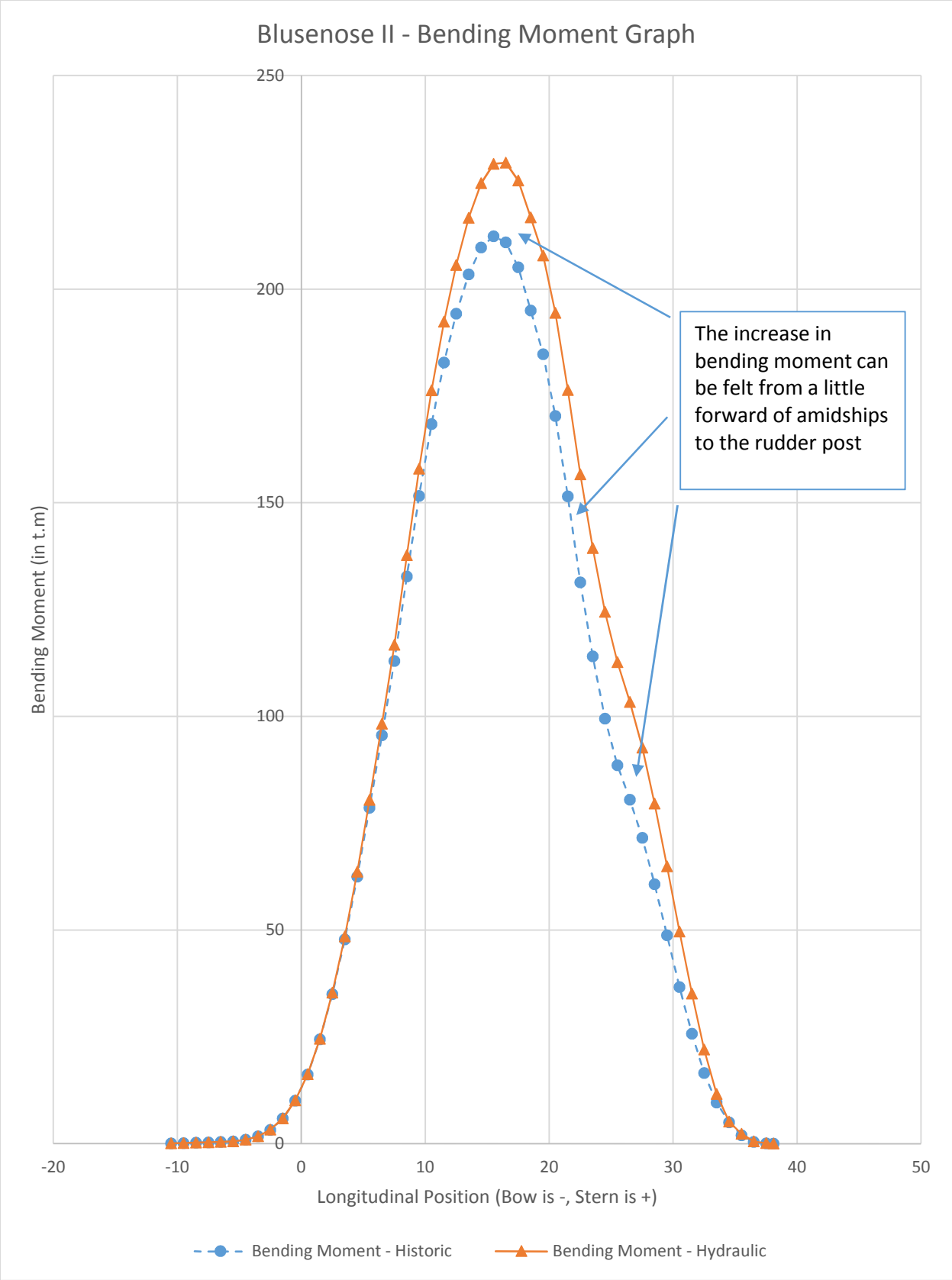
Blusenose II - Bending Moment Graph
Bending Moment (in t.m)
250
200
150
100
50
0
-20
-10
0
10
20
30
40
50
Longitudinal Position (Bow is -, Stern is +)
The increase in bending moment can be felt from a little forward of amidships to the rudder post
Bending Moment - Historic
Bending Moment - Hydraulic

10 Appendix D – Bearing Friction Calculation

Resistance to turning based on coefficient of friction from Thordon (0.25-0.35)

Rudder Weight (wet)	2696.5	*kg*	
Rudder Stock Angle	30.75	*degrees*	
Radial Component	1378.7	*kg*	(Force acting normal to bearings)
	13525.1	*N*	
Axial Component	2317.4	*kg*	(Force acting normal to washers)
	22733.6	*N*	

Torque required from Radial Loads

	Area	Loading	Distance	C of Frict	Load	Torque	
	mm2		*mm*		*N*	*N.m*	
Upper Bearing	43548	25.0%	96.4	0.3	1014	97.8	34.7%
Lower Bearing	43548	25.0%	96.4	0.3	1014	97.8	34.7%
Pintle 1	9635	12.5%	40.5	0.3	507	20.5	7.7%
Pintle 2	9635	12.5%	40.5	0.3	507	20.5	7.7%
Pintle 3	9635	12.5%	40.5	0.3	507	20.5	7.7%
Pintle 4	9635	12.5%	40.5	0.3	507	20.5	7.7%
						277.7	*N.m*

Torque Required from Axial Loads

	Area	Loading	Distance	C of Frict	Load	Torque	
	mm2		*mm*		*N*	*N.m*	
Pintle 1	9503	25%	61.7	0.3	1705	105.2	
Pintle 2	9503	25%	61.7	0.3	1705	105.2	
Pintle 3	9503	25%	61.7	0.3	1705	105.2	
Pintle 4	9503	25%	61.7	0.3	1705	105.2	
						420.8	*N.m*

Total Torque to Overcome Fricion =	**698.5**	*N.m*
	71.2	*kg.m*
	515.0	*ft.lbs*

11 Appendix E – Response to the questions listed in the RFP

Is the deadweight of the current rudder, stock and hydraulic steering likely to cause long term distortion or damage to the structure in the lifespan of the vessel? If yes, at what stage in the life of the vessel can this distortion or damage be expected?

> As has been shown in this review the significant weight of the current steering system, which includes the rudder and the hydraulic system used to steer the vessel, has a significant impact on the shear forces and bending moment acting upon the hull. It is not possible to accurately predict the rate at which the hull will deform over time; one can state, however, that these forces are significant and that they will tend to accelerate this process.

To what extent is the deadweight of the rudder blade contributing to high steering loads, and to what extent would a neutrally or positively buoyant rudder blade and stock mitigate the steering loads?

> The high steering loads are a direct consequence of the design of the rudder. The weight, method of construction, size and shape all contribute to increasing these steering loads beyond what can be handled with a manual steering system. Increasing the buoyancy of the blade will tend to reduce the steering load somewhat however the overall weight of the rudder generates significant friction loads, and the geometry of the blade will make sailing loads excessive.

What are the options for creating a more buoyant rudder/stock assembly? What materials would be most appropriate considering fabrication and installation variables, compatibility with other hull materials and fastenings, longevity, and the requirement for ABS approval?

> A complete proposal has been developed by our office and can be found in the document entitled “Proposal for a Modified Steering System for Bluenose II”. This proposal examines several different construction methods for the rudder.

Can a wooden rudder be envisioned that would meet ABS requirements? Can a wooden rudder be retrofitted on the newly constructed Bluenose II?

> Yes, a wooden rudder could be envisioned for Bluenose II. ABS has given their approval for using the 1943 “Rules for the Construction and Classification of Wood Ships” as the basis upon which a new wood rudder could be designed. Given the extensive service life of the Bluenose II (1964) wood rudder this solution has proven itself perfectly satisfactory.
>
> Yes, a new wood rudder could be retrofitted to Bluenose II. It is beyond the scope of both this review to estimate the cost and time involved in such an endeavor but the authors can find no regulatory or engineering reason why a new wood rudder could not be fitted. There is, however, some level of financial and scheduling risk associated to such a significant modification to the aft end of the vessel.

To what extent is friction in the rudder tube and pintles/gudgeons a cause of the high steering loads? Can another system be envisioned that would reduce friction, avoid undue point loading on the sternpost and meet ABS requirements?

> The friction at the bearings is significant and is mostly driven by the excessive weight of the rudder. This friction makes turning the wheel at rest very difficult, and in turn accentuates the friction that is produced by the oscillating steerer. Reducing the weight of the rudder will tend to reduce the friction significantly. Indeed, if the rudder is neutrally buoyant, this friction at rest should be minimal. For proposed details for a new rudder and methods of attachment please see the proposal document produced by the authors. With a new rudder some consideration needs to be given to the friction inherent in the bearing system chosen.

To what extent would changing the shape of the rudder reduce steering loads and/or enhance the steering response of the vessel?

> Changing the shape and size of the rudder has a direct impact on the steering loads and on the steering response of the vessel. The current shape creates approximately 40% more force at a given speed, *providing the helmsperson can handle this force*. The geometry of the rudder blade is such that the torque required to handle this rudder has increased by 140%. This large increase in torque makes manual steering impossible. It has also been a key driver in the design of the entire steering system which is significantly heavier than necessary.
>
> The rudder on Bluenose II (1963) was substantially smaller than the current rudder and first-hand accounts have not provided any indication that she was difficult to steer.

How could the gudgeons and their connections to the sternpost structure and the current gap between the rudder post and the sternpost be modified so they are fairer?

> The current rudder blade is offset relative to the axis of rotation of the rudder. The leading edge sits aft of this axis. The leading edge of any new rudder should be brought forward of the axis of rotation which will considerably reduce the gap and serve to reduce the torque need to turn the rudder. Some additional fairing strips may be needed on the aft edge of the stern post to reduce this gap to a minimum. For details please refer to the new rudder proposal.

Is there a combination of changes to the rudder system that could be reasonably expected to make the manual worm drive gear a practical proposition while still meeting ABS requirements?

> Yes, the goal should be to make manual steering possible. This can be achievable providing a smaller rudder blade, a significant reduction and weight and careful consideration of the bearing surfaces. See the new rudder proposal for more details.

Based on prior experience, how much flexibility is there within the ABS environment to accommodate innovative solutions that will address the functional requirements of the vessel and meet the intent of the Rules, even if the "letter" of the Rules is not met?

> At this preliminary design stage, we don't foresee any reason to deviate from the standards set forth by ABS. It has been our experience that ABS is open to creative thinking providing suitable engineering has been documented and provided to ABS for review. As is noted in our proposal there is some regulatory risk in trying to mix and match requirements between different rules. Sticking to one rule for the complete rudder reduces this risk significantly.

Assuming changes are recommended, and having regard for economy, practicality, reliability, the need for system redundancy and manual backup, and ABS requirements, what combination of options for materials, blade shape, bearings, connections, and steering gear should the Owner pursue in the detailed design stage?

> Such questions are examined in detail in the new rudder proposal.