Source Emissions Testing – Recovery Boiler and Power Boiler, Winter 2015

Stantec

Prepared for:
Northern Pulp Nova Scotia Corporation
P.O. Box 549, Station Main
New Glasgow, NS B2H 5E8

Prepared by:
Stantec Consulting Ltd.
102-40 Highfield Park Drive
Dartmouth, NS B3A 0A3

Project No. 121413456

April 10, 2015

TABLE OF CONTENTS

LIST OF TABLES

LIST OF FIGURES

List of Appendices

EXECUTIVE SUMMARY

Northern Pulp Nova Scotia Corporation, referred to herein as Northern Pulp, retained Stantec Consulting Ltd. to conduct source emissions testing at the Kraft pulp mill in New Glasgow, Nova Scotia. Source emissions testing were conducted on the Recovery Boiler and the Power Boiler to fulfill the conditions specified in the current Certificate of Approval to Operate (CoA) 2011-076657-R03. The source emissions testing campaign was performed according to the pre-test plan submitted to the Nova Scotia Department of Environment. The testing was conducted during the week of March 9th, 2015.

In this report, source emissions testing data are presented for measurements which include combustion gases and total particulate matter (PM) as well as exhaust gas temperature, exhaust flow rate, moisture content, velocity, and volumetric flow rate. The scope of work for the testing campaign is summarized in Table E.1.

Table E.1 Summary of Scope

Source	Number of Samples per Source	Parameter	Sampling Method
Recovery Boiler	3	Total Particulate Matter (PM)	EPS 1/RM/8
	3	Combustion Gases	EPS 1/RM/15
Power Boiler	3	Total Particulate Matter (PM)	EPS 1/RM/8
	3	Combustion Gases	EPS 1/RM/15

The average measured concentration of PM from the Power Boiler was 155 mg/Rm^3 (corrected to 11% O_2), which is above the respective regulatory stack limit of 150 mg/Rm^3 presented in Table 1 of the facility's Approval. The measured concentration of PM from the Recovery Boiler was 833 mg/Rm^3 (corrected to 11% O_2), which is above the regulatory limit of 375 mg/Rm^3 presented in Table 1 of the facility's Approval.

1.0 INTRODUCTION

Northern Pulp Nova Scotia Corporation, referred to herein as Northern Pulp, retained Stantec Consulting Ltd. (Stantec) to conduct source emissions testing at the Kraft pulp mill in New Glasgow, Nova Scotia. Source emissions testing were conducted on the Recovery Boiler and the Power Boiler. The source emissions testing campaign was performed according the pre-test plan submitted on February 23rd, 2015 to the Nova Scotia Department of Environment, following methods published by the United States Environmental Protection Agency and Environment Canada. The testing was conducted during the week of March 9th, 2015.

In this report, source emissions testing data are presented for combustion gases (oxygen, carbon dioxide, nitrogen oxides, sulphur dioxide, and carbon monoxide), total particulate matter (PM), exhaust gas temperature, exhaust flow rate, moisture content, velocity, and volumetric flow rate.

This report is in five sections. Section 1 contains the introduction and the scope of work for the project. The study approach and a brief description of the various parts of the project are in Section 2. Section 3 contains a brief description of the testing methodologies, equipment, and calibration techniques used during the source emissions testing program. In Section 4, the results of the source emissions testing are presented and discussed, and concluding remarks are presented in Section 5. Appendices A through D contain supporting information for the report.

2.0 OVERALL APPROACH

The project consisted of five parts:

1. Submission of the Pre-test Plan;
2. Site Preparation and Preliminary Survey;
3. On-site Source Emissions Testing;
4. Laboratory Analysis; and
5. Information Review and Reporting.

Each of these parts is described below.

2.1 SUBMISSION OF PRE-TEST PLAN

The on-site testing was conducted in accordance with the Pre-Test Plan submitted on February 23rd, 2015 to Nova Scotia Environment (NSE). The Pre-Test Plan outlined the contaminants to be tested, as well as the methodologies proposed for conducting the source testing on the exhaust stacks. Appendix A provides a copy of the plan.

2.2 ON-SITE SOURCE EMISSIONS TESTING

Stantec set up the source emissions testing equipment and conducted a preliminary survey to measure the exhaust gas temperature, velocity, and flue gas composition for those sources requiring particulate testing. The data from this survey was used to determine the appropriate nozzle size to conduct isokinetic sampling (where the velocity of the gas entering the nozzle is equal to the gas velocity in the stack) for particulate matter sampling.

Three (3) tests for total particulate matter were conducted at defined sampling locations within the cross-section of the exhaust stacks of the Recovery Boiler and the Power Boiler. Three tests for combustion gases were also conducted, near the centre of the exhaust stacks of the Recovery Boiler and the Power Boiler. All testing was completed in compliance with the sampling methods presented in Table 2.1, in accordance with the *Air Quality Regulation*, under the *Environment Act*, Section 112 issued by Nova Scotia Environment (NSE) and the requirements of the facility's approval (2011-076657-R03) issued by the NSE.

The methodologies used for testing the emissions from each exhaust stack are summarized in Table 2.1.

Table 2.1 Source Emissions Testing Matrix

Source	Number of Samples per Source	Approval Condition	Parameter	Sampling Method
Recovery Boiler	3	6. a)	Total Particulate Matter (PM)	EPS 1/RM/8
	3	-	Combustion Gases	EPS 1/RM/15
Power Boiler	3	6. a)	Total Particulate Matter (PM)	EPS 1/RM/8
	3	-	Combustion Gases	EPS 1/RM/15

2.3 INFORMATION REVIEW AND REPORTING

The data collected in the field, along with data from the laboratory analyses, were entered into the Stantec's source emissions testing spreadsheets for analysis. Emissions calculations were then performed to produce the detailed source emissions testing information. Spreadsheet calculations were verified by hand, and numerous spot checks of spreadsheet formulas were conducted to ensure the accuracy of data. Summary tables were prepared and incorporated into this report for submission to Northern Pulp.

3.0 TEST METHODS, EQUIPMENT, AND CALIBRATIONS

This section contains a description of the methods and equipment used to conduct the source emissions testing campaign. The calibration procedures used to ensure the quality of the source emissions testing data are also summarized in this section.

3.1 SAMPLING PROCEDURES AND EQUIPMENT

The following sub-sections contain brief descriptions of the sampling equipment and methodologies used during the source emissions testing campaign.

3.1.1 Total Particulate Matter

Particulate matter emissions from the exhaust stacks were measured in accordance with the Environment Canada Reference Method EPS 1/RM/8, entitled *Reference Methods for Source Testing: Measurement of Releases of Particulate from Stationary Sources*.

The sampling train, used specifically for isokinetic sampling of particulate matter, is described in detail in EPS 1/RM/8, and is generally referred to as the 'Method 5' sampling train for particulate matter, named after the United States Environmental Protection Agency (US EPA) protocol. The sampling train consists of several different components which include: a heated sampling probe (a nozzle, stainless steel liner, thermocouple, and pitot tube assembly), a heated sample case containing a filter, an ice box containing impinger glassware, and an umbilical cord leading to the pump and control console. A schematic of the sampling system is shown in Figure 3.1. The operation of the Method 5 sampling train can be generally described as follows.

Exhaust gases are drawn through the probe nozzle at or near isokinetic conditions (*i.e.*, where the gas velocity in the nozzle is at the same velocity as the gas in the stack). The gases are then drawn through the inner stainless steel liner of the electrically heated sampling probe to the other components of the sampling train.

A pitot tube assembly is attached to the probe next to the nozzle to measure the exhaust gas velocity in the area of the probe nozzle. Using the differential pressure reading on the control console, the desired nozzle flow rate is determined from the differential pressure across a calibrated orifice.

The exhaust gases are drawn from the probe liner through a pre-weighed glass fiber filter, in the hot side of the sampling unit, and then through pre-weighed impingers in an ice bath to cool the gases and condense the moisture in the gas, before the gas enters the umbilical cord.

The umbilical cord carries the filtered, cooled exhaust gases from the sampling site to the control console. The control console contains a fiber vane vacuum pump, which is used to draw the exhaust gases through the sampling train. A calibrated dry gas meter records the volume of gas sampled.

FILE: STANDARD1

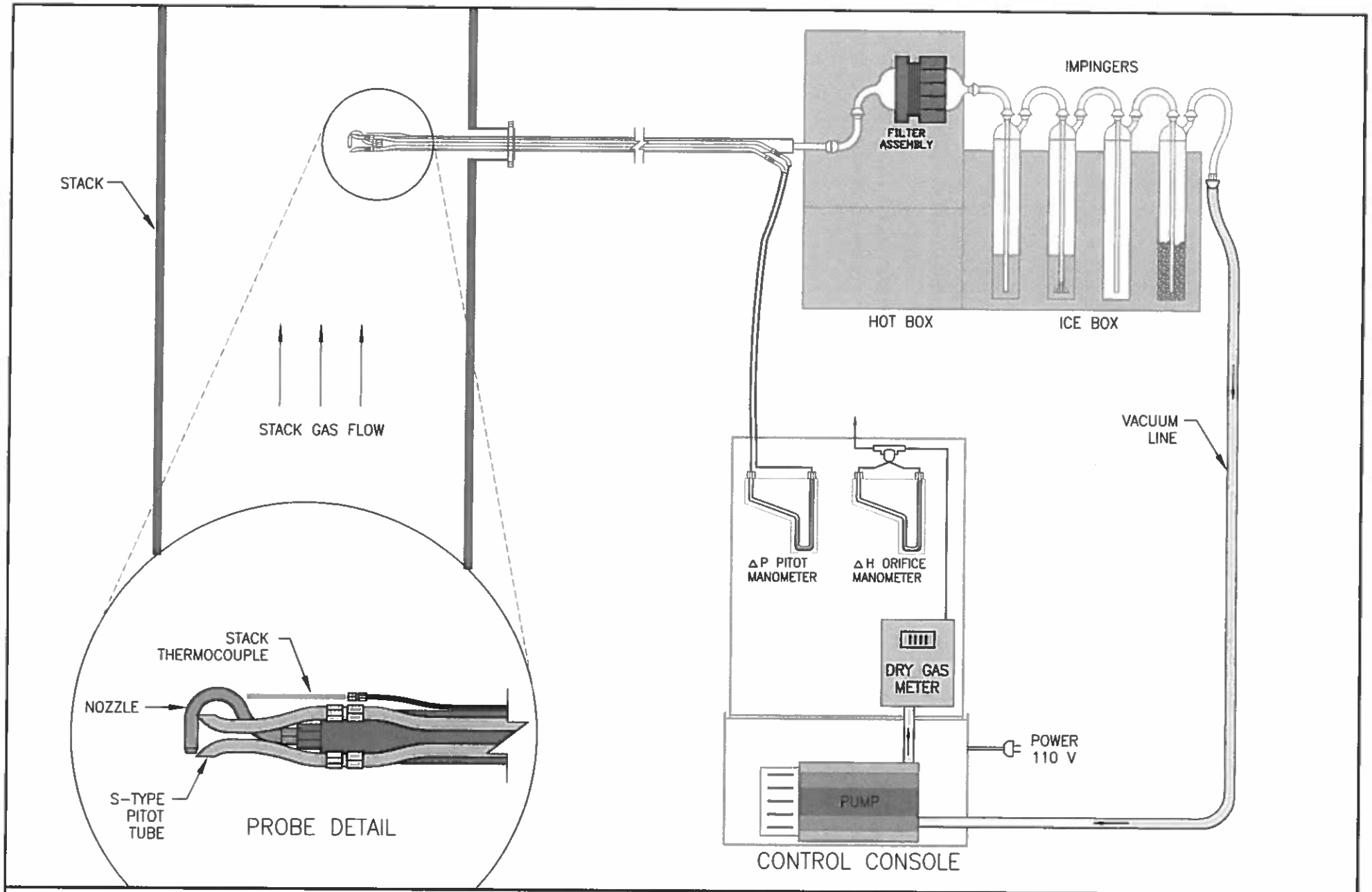

Stantec

SOURCE EMISSIONS TESTING
METHOD 5 SAMPLING TRAIN

Scale: N.T.S.

Fig. No.: 1

After completion of testing, the impingers are re-weighed, with the difference in mass corresponding to the mass of water collected. This measurement is used to calculate the moisture content of the exhaust gas.

Prior to the particulate matter testing, filters were conditioned and pre-weighed. Following the testing, particulate matter was recovered from the nozzle, the sampling probe and the in-line filter. Following testing, the filter containing the particulate sample, was conditioned and weighed, and the net weight of the collected particulate matter was determined. After each test, the probe and nozzle were rinsed with acetone and this acetone was collected, placed into a pre-weighed container and evaporated until dry. The amount of particulate for each part of the sample was determined gravimetrically, and the mass of particulate matter collected for each test was calculated as the sum of the particulate matter collected in the filter, probe, and nozzle rinse. The contents of the water filled impingers were also recovered gravimetrically for particulate matter and reported separately as requested by the NSE. These recoveries were performed at Stantec's laboratory in Fredericton, New Brunswick. Appendix B contains the equipment calibration data.

3.1.2 Combustion Gases

The combustion gases (O_2, CO_2, CO, NO_x, and SO_2) from the boilers were sampled according to the Environment Canada reference method EPS 1/RM/15, entitled *Reference Method for the Monitoring of Gaseous Emissions from Fossil Fuel-fired Burners*. In this method, samples of flue gas are drawn through a probe, non-isokinetically, from a single point near the centre of the stack. An ENERAC Model 500 Micro-Emission Analyzer, manufactured by ENERAC Inc., was used to conduct the sampling. The Model 500 is equipped with a flue gas probe that has an integrated filter trap and condensate trap, and a housing unit that contains the pump and the electrochemical cells which are used to measure concentrations of sulphur dioxide, nitrogen oxides, carbon monoxide, carbon dioxide, and oxygen. The ENERAC Model 500 Micro-Emission Analyzer is manufactured and calibrated to confirm accuracy. Calibration data is included in Appendix B.

3.2 QUALITY ASSURANCE AND QUALITY CONTROL

Throughout the source emissions testing program, quality assurance and quality control procedures were applied to ensure the collection of reliable and accurate emissions data. Quality control checks were performed at several stages during the testing program to ensure the collection of representative samples and the generation of valid results.

The Quality Control (QC) checks included the following:

- use of standardized checklists and field notebooks to ensure completeness, traceability, and comparability of the process information and samples;
- field checking of standardized forms by a second person to ensure accuracy and completeness;

- strict adherence to sample chain-of-custody procedures;
- testing for cyclonic or reverse flow, as well as stratified flow conditions; and
- leak checks of sampling train.

Equipment was calibrated according to the protocols and schedule as prescribed by NSE, Environment Canada, and the US EPA. These calibrations include the following:

Pitots: Calibrated in a wind tunnel with probe and nozzles attached.

Gas meters: Calibrated using a critical orifice calibration set.

Nozzle: Four diameter measurements made using a micrometer across the sharpened edges.

Thermocouples: Calibrated using a potentiometric technique.

Gas Analyzers: Calibrated against reference gases using standard calibration gases within the expected range of concentrations from the source.

Calibration data are in Appendix B of this report.

4.0 RESULTS AND DISCUSSION

The results of the source emissions testing campaign are provided and discussed in this section.

Appendices B through D contain supporting information including calibration information, field data sheets, and calculations.

4.1 EXHAUST STACK SAMPLE LOCATION DETAILS

Table 4.1 provides a summary of the sample location details for each exhaust stack sampled.

Table 4.1 Sample Location Details

Parameter	Recovery Boiler	Power Boiler
Stack Height – Above Grade (m)	69	51
Stack Diameter at Sampling Ports (m)	3.51	1.93*
Stack/Duct Description	Circular	Circular
Stack Orientation	Vertical	Vertical
Number of Sample Ports	4	2
Sample Port Diameter (m)	0.1	0.1
Location Upstream from any Disturbance	>2	>2
Location Downstream from any Disturbance	1.45	>4
Ideal or Non Ideal Flow Characteristics at The Sample Location[1]	Non Ideal	Non Ideal

Table 4.1 Sample Location Details

Parameter	Recovery Boiler	Power Boiler
Total Number of Sample Points for PM	24	24
Number of Sample Points per Traverse for PM	12	12
Sample Time per Point for PM (min)	5	5
Sample time per Test for PM (min)	120	120
Sample time per Test for TRS (min)	NA	NA
Sample time per Test for gases (min)	30	30

*Diameter confirmed while testing during the week of March 9th

4.2 RECOVERY BOILER

The results of the source emissions testing for total particulate matter and combustion gases from the Recovery Boiler exhaust stack are in Tables 4.2 and 4.3, respectively.

Table 4.2 Source Testing Results - Recovery Boiler - Particulate Matter

Parameter	Test #1	Test #2	Test #3	Average	Stack Emission Limit (Table 1 of Approval)
Test Date	Mar. 10, 2015	Mar. 10, 2015	Mar. 11, 2015	-	-
Test Start	9:00 AM	12:15 PM	9:20 AM	-	-
Test Duration (min)	120	120	120	120	-
Volume of Gas Sampled (Rm^3)	1.81	1.87	1.75	1.81	-
Average Isokineticity (%)	105	102	104	103	-
Total Volume of Moisture Collected in Impingers (mL)	540	542	541	541	-
Particulate Matter From Filter and Probe Wash (mg)	2,474	2,779	2,220	2,491	-
Particulate Matter From Impingers (mg)	1.94	4.54	3.27	3.25	-
Exhaust Gas Parameters					
Exhaust Gas Temperature (°C)	67.6	67.8	63.9	66.4	-
Exhaust Gas Moisture Content (%)	28.9	28.3	29.5	28.9	-
Exhaust Gas Velocity (m/s)	13.7	14.5	13.7	14.0	-
Exhaust Gas Volumetric Flow Rate (Rm^3/s)	83.3	88.6	81.7	84.6	-
Oxygen - O_2 (%)	4.80	4.50	4.39	4.56	-
Carbon Dioxide - CO_2 (%)	15.6	15.9	16.1	15.9	-

Table 4.2 Source Testing Results - Recovery Boiler - Particulate Matter

Parameter	Test #1	Test #2	Test #3	Average	Stack Emission Limit (Table 1 of Approval)
Total Particulate Matter - PM Concentration at 11% O_2 (mg/Rm³)	842	898	759	833	375*
Emission Rate (kg/hr)	411	474	373	419	-

Legend:
°C Degrees Celsius.
m/s Metres per second.
Rm³/s Dry cubic metres per second at reference conditions (25°C and 101.3 kPa).
mg/Rm³ Milligrams per dry cubic metre at reference conditions (25°C and 101.3 kPa).
kg/hr Kilograms per hour.
*For the period between the issuance of Approval No. 2011-076657-R03 and the commissioning of the recovery boiler precipitator system, the particulate emission limit for the Recovery Boiler is 375 mg/Rm³.

The average measured concentration of particulate matter was 833 mg/Rm³ (corrected to 11% O_2), which is above the stack emission limit of 375 mg/Rm³ presented in Table 1 of the facility's Approval.

Table 4.3 Source Testing Results - Recovery Boiler - Combustion Gases

Parameter	Test #1	Test #2	Test #3	Average
Test Date	Mar. 10, 2015	Mar. 10, 2015	Mar. 11, 2015	-
Test Duration (min)	30	30	30	30
Exhaust Gas Volumetric Flow Rate (Rm³/s)	83.3	88.6	81.7	84.6
Sulphur Dioxide - SO_2				
Concentration (ppm)	8.14	6.14	27.9	14.0
Concentration (mg/Rm³)	13.1	9.72	43.8	22.2
Emissions Rate (kg/hr)	6.40	5.14	21.5	11.0
Nitrogen Oxides - NO_x				
Concentration (ppm)	23.7	46.1	52.1	40.7
Concentration (mg/Rm³)	27.4	52.4	58.8	46.2
Emissions Rate (kg/hr)	13.4	27.7	28.9	23.3
Carbon Monoxide - CO				
Concentration (ppm)	1,772	2,817	3,083	2558
Concentration (mg/Rm³)	1,248	1,947	2,116	1770
Emissions Rate (kg/hr)	609	1,029	1,039	892

Legend:
Rm³/s Dry cubic metres per second at reference conditions (25°C and 101.3 kPa).
mg/Rm³ Milligrams per dry cubic metre at reference conditions (25°C and 101.3 kPa).
kg/hr Kilograms per hour.
NA Not Applicable

The emission rates for SO_2, NO_x and CO for the Recovery Boiler were 11.0 kg/hr, 23.3 kg/hr and 892 kg/hr, respectively.

4.3 POWER BOILER

The results of the source emissions testing for total particulate matter and combustion gases from the Power Boiler exhaust stack are in Tables 4.4 and 4.5, respectively.

Table 4.4 Source Testing Results - Power Boiler - Particulate Matter

Parameter	Test #1	Test #2	Test #3	Average	Stack Emission Limit (Table 1 of Approval)
Test Date	Mar. 10, 2015	Mar. 11, 2015	Mar. 11, 2015	-	-
Test Start	8:47 AM	12:00 PM	2:52 PM	-	-
Test Duration (min)	120	120	120	120	-
Volume of Gas Sampled (Rm^3)	1.50	1.34	1.48	1.44	-
Average Isokineticity (%)	107	108	105	106	-
Total Volume of Moisture Collected in Impingers (mL)	291	260	285	278	-
Particulate Matter From Filter and Probe Wash (mg)	220	239	229	229	-
Particulate Matter From Impingers (mg)	4.8	3.0	4.2	4.0	-
Exhaust Gas Temperature (°C)	64.7	65.1	63.9	64.6	-
Exhaust Gas Moisture Content (%)	20.8	20.8	20.7	20.8	-
Exhaust Gas Velocity (m/s)	18.9	17.1	19.1	18.4	-
Exhaust Gas Volumetric Flow Rate (Rm^3/s)	38.2	34.4	38.5	37.0	-
Oxygen - O_2 (%)	10.8	11.4	9.7	10.6	-
Carbon Dioxide - CO_2 (%)	9.79	9.26	11.0	10.0	-
Total Particulate Matter - PM					
Concentration at 11% O_2 (mg/Rm^3)	143	185	137	155	150
Emission Rate (kg/hr)	20.1	22.1	21.5	21.2	-

Legend:
°C Degrees Celsius.
m/s Metres per second.
Rm^3/s Dry cubic metres per second at reference conditions (25°C and 101.3 kPa).
mg/Rm^3 Milligrams per dry cubic metre at reference conditions (25°C and 101.3 kPa).
kg/hr Kilograms per hour.
ND Non-detectable

The average measured concentration of particulate matter (corrected to 11% O_2) was 155 mg/Rm^3, which is slightly above the stack emission limit of 150 mg/Rm^3 presented in Table 1 of the facility's Approval (No. 2011-076657-R02). Only one out of the three tests was above the limit.

Table 4.5 Source Testing Results - Power Boiler - Combustion Gases

Parameter	Test #1	Test #2	Test #3	Average
Test Date	Mar. 10, 2015	Mar. 11, 2015	Mar. 11, 2015	-
Test Duration (min)	30	30	30	30
Exhaust Gas Volumetric Flow Rate (Rm^3/s)	38.2	34.4	38.5	37.0
Sulphur Dioxide - SO_2				
Concentration (ppm)	ND	ND	ND	ND
Concentration (mg/Rm^3)	ND	ND	ND	ND
Emissions Rate (kg/hr)	ND	ND	ND	ND
Nitrogen Oxides - NO_x				
Concentration (ppm)	16.1	21.0	26.3	21.1
Concentration (mg/Rm^3)	29.7	41.0	43.7	38.1
Emissions Rate (kg/hr)	4.18	4.89	6.86	5.31
Carbon Monoxide - CO				
Concentration (ppm)	1,734	2,079	1,936	1,916
Concentration (mg/Rm^3)	1,940	2,470	1,960	2,123
Emissions Rate (kg/hr)	273	295	307	292

Legend:
Rm^3/s Dry cubic metres per second at reference conditions (25°C and 101.3 kPa).
mg/Rm^3 Milligrams per dry cubic metre at reference conditions (25°C and 101.3 kPa).
kg/hr Kilograms per hour.

The average emission rates of NO_x and CO from the Power Boiler were 5.31 kg/hr and 292 kg/hr, respectively. No SO_2 was detected.

4.4 SUMMARY OF RESULTS

Currently there are specified regulatory limits in the facility's approval (2011-076657-R03) for emissions of PM for the Recovery Boiler and the Power Boiler. The measured concentration of PM from the Power Boiler was slightly above the regulatory stack limit. The measured concentration of PM from the Recovery Boiler was above its respective regulatory limit.

5.0 CLOSURE

This report has been prepared for the sole benefit of Northern Pulp Nova Scotia Corporation. This report may not be relied upon by any other person or entity without the express written consent of Stantec and Northern Pulp Nova Scotia Corporation. Any use of this report by a third party, or any reliance on decisions made based upon this report, are the responsibility of the third party. Stantec accepts no responsibility for damages, if any, suffered by any third party as a result of decisions made or actions based on this report.

Stantec makes no representation or warranty with respect to this report, other than the work was undertaken by trained professional and technical staff in accordance with generally accepted engineering and scientific practices current at the time the work was performed. Any

information or facts provided by others and referred to or utilized in the preparation of this report was assumed by Stantec to be accurate.

This study was undertaken exclusively for the purpose outlined herein and was limited to those contaminants and sources specifically referenced in this report. It should be noted that the measurements were taken over a relatively short time period on-site, and the emissions results may be considered representative only for the conditions present at the time of testing. This report cannot be used or applied under any circumstances to another location or situation or for any other purpose without further evaluation of the data and related limitations.

This report was developed by Gillian Hatcher, M.A.Sc. and reviewed by Vicki Corning, P.Eng. and Mark Scaplen, P.Eng.

If you have any questions regarding the contents of this report, or require any additional information, please do not hesitate to contact the undersigned.

Gillian Hatcher, M.A.Sc.
Project Manager
Tel: (902) 468-7777

Vicki Corning, P.Eng.
Associate, Environmental Services
Tel: (506) 452-7000

Appendix A

Pre-test Plan

Stantec

Stantec Consulting Ltd.
102 - 40 Highfield Park Drive
Dartmouth NS B3A 0A3
Tel: (902) 468-7777
Fax: (902) 468-9009

February 20, 2015
File: 121413456

Attention: Mr. Marc Theriault
Nova Scotia Environment
20 Pumphouse Road
Pictou, NS B2H 5C6

Dear Mr. Theriault,

Reference: Pre-Test Plan for Source Emissions Testing Northern Pulp, Pictou Mill – 2015 Calendar Year

Please accept this Pre-test Plan for the completion of source emissions required at the Pictou Mill in New Glasgow, Nova Scotia for the 2015 calendar year.

Introduction

Northern Pulp is required to perform source emissions testing on the Recovery Boiler, Lime Kiln, Smelt Dissolving Tank, Power Boiler and the High Level Roof Vent to fulfil the conditions specified in the current Certificate of Approval (CoA) to Operate 2011-076657-R03. The required annual testing for 2015 consists of:

- Recovery Boiler and Power Boiler particulate matter testing 4 times per year;
- Lime Kiln and Smelt Dissolving Tank particulate matter testing 2 times per year;
- Lime Kiln, High Level Roof Vent and Smelt Dissolving Tank total reduced sulphur (TRS) testing 2 times per year;
- One $PM_{2.5}$ testing event per year on the four stacks noted above for particulate matter; and
- One Chlorine (Cl) and Chlorine Dioxide (ClO_2) event per year on the bleach plant exhaust (High Level Roof Vent being the source of these emissions).

Test Program Organization

The source emissions testing will be performed for:

Company Name:	Northern Pulp
Company Address:	P.O. Box 549, Station Main, New Glasgow, NS, B2H 5E8
Contact Name:	
Position:	Environmental/Technical Leader
Telephone Number:	(902) 752-8461
Email:	@northernpulp.com

Reference: Pre-Test Plan for Source Emissions Testing Northern Pulp, Pictou Mill – 2015 Calendar Year

Sampling Company: Stantec Consulting Ltd.
Project Manager: Gillian Hatcher
Telephone Number: (902) 468-7777
Fax Number: (902) 468-9009
Email: @Stantec.com
Key Sampling Team: (with support from other staff as needed)

Source Emissions Testing Program

The proposed source emissions testing methodology and proposed sampling timeframes are presented in Table 1.

Table 1 Source Emissions Testing Matrix

Source	Number of Visits	Number of Tests per Visit	Parameter	Sampling Method	Proposed Timeframe
Recovery Boiler	4	3	Total Particulate Matter (PM)	EPS 1/RM/8	Winter, Spring, Summer, Fall
	4	3	Combustion Gases	EPS 1/RM/15	Winter, Spring, Summer, Fall
	1	3	Particle Size Analysis	Microscopic technique	Fall
Power Boiler	4	3	Total Particulate Matter (PM)	EPS 1/RM/8	Winter, Spring, Summer, Fall
	4	3	Combustion Gases	EPS 1/RM/15	Winter, Spring, Summer, Fall
	1	3	Particle Size Analysis	Microscopic technique	Fall
Lime Kiln	2	3	Total Particulate Matter (PM)	EPS 1/RM/8	Spring, Fall
	2	3	Combustion Gases	EPS 1/RM/15	Spring, Fall
	1	3	Particle Size Analysis	Microscopic technique	Fall
	2	3	Total Reduced Sulphur (TRS)	US EPA Method 16B/C	Spring, Fall
Smelt Dissolving Tank	2	3	Total Particulate Matter (PM)	EPS 1/RM/8	Spring, Fall
	2	3	Combustion Gases	EPS 1/RM/15	Spring, Fall
	1	3	Particle Size Analysis	Microscopic technique	Fall
	2	3	Total Reduced Sulphur (TRS)	US EPA Method 16B/C	Winter, Summer
High Level Roof Vent	2	3	Total Reduced Sulphur (TRS)	US EPA Method 16B/C	Spring, Fall
	2	3	Combustion Gases	EPS 1/RM/15	Spring, Fall

Reference: Pre-Test Plan for Source Emissions Testing Northern Pulp, Pictou Mill – 2015 Calendar Year

Table 1 Source Emissions Testing Matrix

Source	Number of Visits	Number of Tests per Visit	Parameter	Sampling Method	Proposed Timeframe
	1	3	Chlorine and chlorine dioxide	NCASI Special Report 91-07	Spring

Note:
Timeframes are as follows based on the approval deadlines-Winter: January-March 31, 2015, Spring: April – June 30, 2015, Summer: July-September 30, 2015, Fall: October-December 31, 2015

Details of each of the methods identified in Table 1, in addition to the preliminary testing methodology, are provided in the sections that follow.

Preliminary Testing: Upon arrival at each sampling location, Stantec will set up the source emissions testing equipment and conduct a preliminary survey to measure the average velocity, flue gas composition, and moisture content in the stack gases using EPS 1/RM/8 Methods B, C, and D, respectively. The data from this survey will be used to determine the appropriate nozzle size to conduct isokinetic sampling (where the velocity of the gas entering the nozzle is equal to the gas velocity in the stack) for particulate matter during the official testing part of the work. Verification for cyclonic or reverse flow will also be conducted during the preliminary survey, according to procedures outlined in the Environment Canada reference method EPS 1/RM/8.

Should fluctuations in the velocity pressure at a selected traverse point exceed 20% of the average pressure for that point; the diameter of the testing cross section will be reduced to include only those areas along the traverse which meet this requirement (less than 20% of the average). Although the diameter may be reduced, the number of sampling points along each traverse will remain the same as determined from EPS 1/RM/8, Method A, using the equivalent diameter.

Volumetric flow and exhaust gas emissions will be calculated using the full cross sectional area.

Particulate Matter: The source emissions testing of the Recovery Boiler, Lime Kiln, Smelt Dissolving Tank, and the Power Boiler for total particulate matter will be conducted in accordance with the Environment Canada reference method EPS 1/RM/8, entitled "Measurement of Releases of Particulate from Stationary Sources". In addition the alignment approach, as specified in the US EPA Guidance Document – GD-008, will be applied when source testing the Lime Kiln due to the cyclonic flow this source exhibits.

The particulate sampling train, used specifically for isokinetic sampling, is described in detail in EPS 1/RM/8, and is generally referred to as the "Method 5" sampling train for particulate matter (after the US EPA protocol). The sampling train has several different components which include: a heated sampling probe (a nozzle, stainless steel liner, thermocouple, and pitot tube assembly), a heated sample case containing a filter, an ice box containing impinger glassware, and an

Reference: Pre-Test Plan for Source Emissions Testing Northern Pulp, Pictou Mill – 2015 Calendar Year

umbilical cord leading to the pump, and control console. A schematic of the sampling system is shown in Figure 1.

For all source tests, leak checks of the sampling train will be performed as per accepted US EPA and Environment Canada methods. For each official test, two (2) traverses with up to twelve (12) sampling points per traverse will be used. Sampling will be conducted for five (5) minutes per sampling point, up to a maximum sampling time of 120 minutes per test.

The amount of material caught in the impingers will be determined gravimetrically and reported separately from the calculated total particulate matter emissions. All particulate matter samples will be recovered and analyzed at the Stantec laboratory in Fredericton, NB.

Microscopic Analysis (Fine Particulate, $PM_{2.5}$): As per the facility's Industrial Approval to Operate, the Environment Canada EPS 1/RM/55 or an alternative method acceptable to the Department is required for $PM_{2.5}$ testing. As the method quoted in the approval is not valid for stacks with potential for entrained water droplets in the exhaust (which applies to boilers and dissolving tank at Northern) or cyclonic flow (which applies to the Lime Kiln), we propose microscopic analysis of filters as the viable option. This method involves analysis of total particulate matter filters (collected as described above) for fine particulate percentage.

The particle size analyses will be performed by MVA Scientific Consultants, based in Duluth, GA, using a JEOL JSM-6500F field emission scanning electron microscope operating in automated mode under the control of a Thermo Scientific Noran System SIX x-ray analysis system, using their automated particle size analysis method.

Total Reduced Sulphur: The source emissions testing of the Lime Kiln, the Smelt Dissolving Tank and the High Level Roof Vent for total reduced sulphur will be conducted in accordance with US EPA Method 16B. In this method, the sample is extracted from the exhaust gas of the stack through a heated Teflon line. The sample is chilled and then passes through an SO_2 analyzer to measure SO_2 from the source. The sample exits the analyzer and is then passed through a furnace where all sulphur compounds in the gas stream are thermally oxidized to SO_2, this SO_2 is measured in a second inline analyzer. The difference in the initial SO_2 and the final SO_2 measurement is the total reduced sulphur concentration (reported as H_2S). The analyzers are both Western Research SO_2 non-dispersive ultra-violet (NDUV) continuous analyzer. Monitoring will be conducted continuously over a 24 hour period as required by the approval condition.

Chlorine, Chlorine Dioxide (Cl_2, ClO_2): Sampling will be conducted in accordance with NCASI's sampling method which consists of the extraction of a sample bubbling through midget impingers and subsequent analysis by titration. The sampling train for the Cl_2 and ClO_2 consists of series of three mini impingers, connected by Teflon tubing. The first two impingers each contain 20 ml of potassium iodide (KI) solution buffered with potassium di-hydrogen phosphate (KH_2PO_4). The third impinger contains silica gel to remove any remaining moisture from the gas stream. The impingers are cooled by an ice bath, and the dried gas is then drawn through the sampling train with a calibrated pump. Total sampling time for each test is sixty (60) minutes.

Reference: Pre-Test Plan for Source Emissions Testing Northern Pulp, Pictou Mill – 2015 Calendar Year

Following completion of each test for Cl_2 and ClO_2, the contents of the first two impingers are combined in a pre-cleaned beaker. Subsequent analysis via titration will be performed onsite by Stantec. The combined impinger solutions and de-ionized water rinse of the sample line and empty impingers would be titrated with sodium thiosulphate solution (0.010 N). The volume of titrant required to reach the first colorless endpoint would be recorded on a recovery data form. Five (5) ml of 10% sulphuric acid would be added to the sample and the titration continued. The volume of titrant required to reach the second colorless endpoint would be recorded on a recovery data form. These titrations would be conducted on site shortly following sampling by one of the field staff during the testing due to the instability of the samples, which begin to degrade after 24 hours.

Combustion Gases:

The combustion gases (O_2, CO_2, CO, NO_x, and SO_2) will be sampled according to the Environment Canada reference method EPS 1/RM/15, entitled *Reference Method for the Monitoring of Gaseous Emissions from Fossil Fuel-fired Burners*. In this method, samples of flue gas are drawn through a probe, non-isokinetically, from a single point near the centre of the stack. An ENERAC Model 500 Micro-Emission Analyzer, manufactured by ENERAC Inc., will be used to conduct the sampling. The Model 500 is equipped with a flue gas probe that has an integrated filter trap and condensate trap, and a housing unit that contains the pump and the electrochemical cells which are used to measure concentrations of sulphur dioxide, nitrogen oxides, carbon monoxide, carbon dioxide, and oxygen.

In accordance with the regulatory requirements for compliance testing, three replicate tests for each contaminant will be conducted on each stack.

Reporting

As per Approval No. 2011-076657-R03, actual particulate matter emission rates will be reported in units of g/s. The concentration released to the atmosphere will be reported in units of mg/m^3 at reference conditions of 25 °C and 101.3 kPa corrected for 11 % oxygen for the Recovery Boiler and Power Boiler and in units of kg/adubmt for the Lime Kiln and the Dissolving Tank. Fine particulate matter concentrations for the Lime Kiln, Dissolving Tank, Power Boiler and Recovery Boiler will be reported in units of mg/m^3 at reference conditions of 25 °C and 101.3 kPa corrected for 11 % oxygen. Total reduced sulphur will be reported in units of parts per million by dry volume (ppmdv). Emission rates of chlorine and chlorine dioxide from the High Level Roof Vent will be reported in units of g/s and the concentrations released to the atmospheric will be reported in units of mg/m^3.

Results of each source emissions testing event will be documented in a final report for submission to Nova Scotia Environment (NSE) for review and approval within 60 days of completing the testing.

Reference: Pre-Test Plan for Source Emissions Testing Northern Pulp, Pictou Mill – 2015 Calendar Year

Sampling Locations

The number and location of sample points along each traverse were previously determined according to EPS 1/RM/8, Method A, using the exhaust stack diameter. A diagram of a typical sample location is provided in Figure 2.

Figure 1 Source Emission Testing, Method 5 Sampling Train

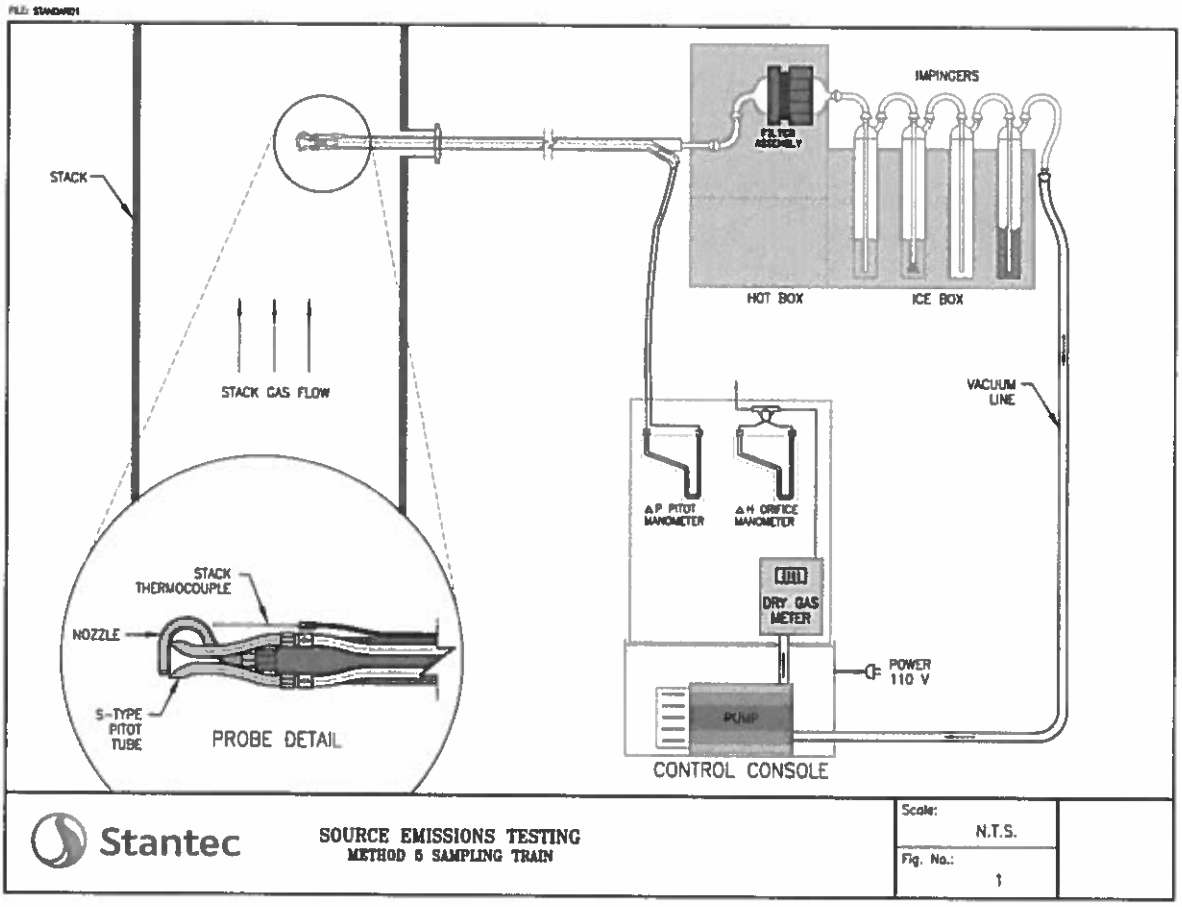

Reference: Pre-Test Plan for Source Emissions Testing Northern Pulp, Pictou Mill – 2015 Calendar Year

Figure 2 Source Emissions Testing, Sample Location Details

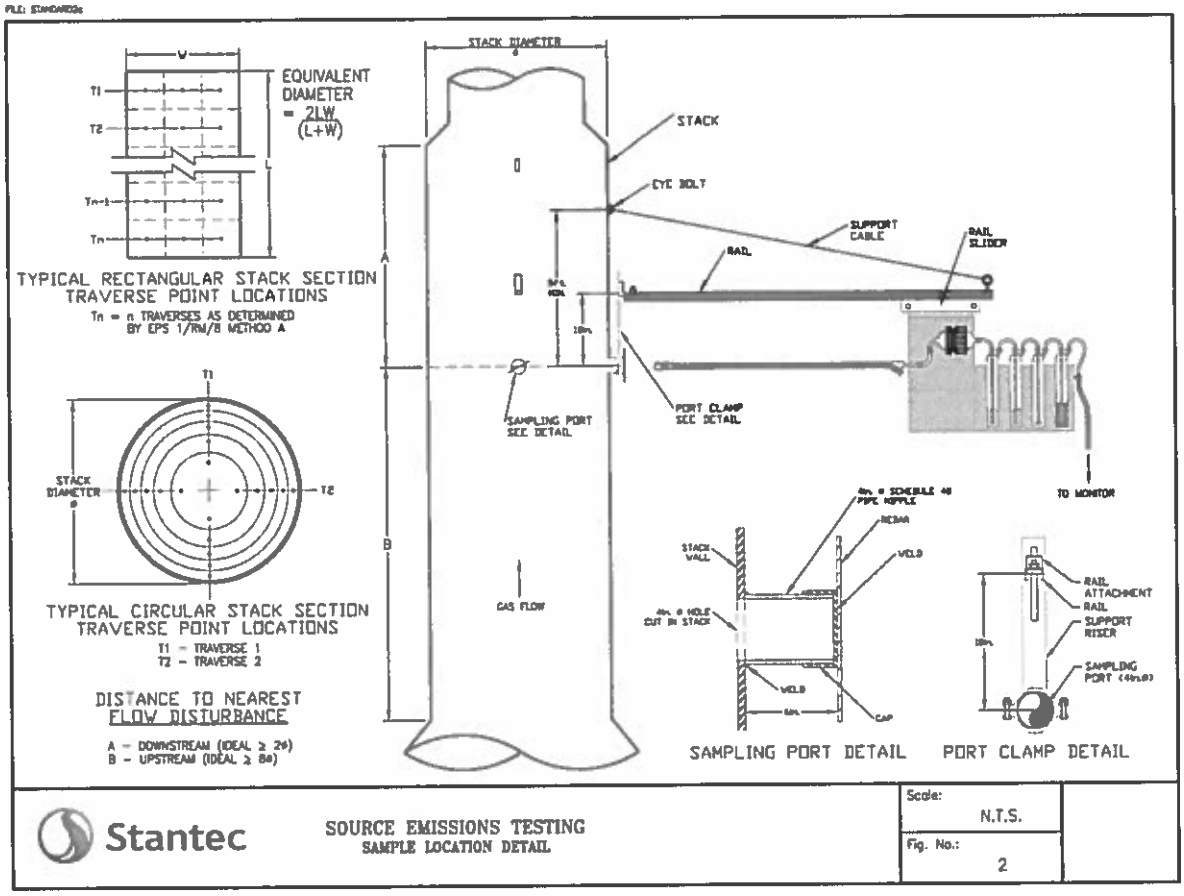

Reference: Pre-Test Plan for Source Emissions Testing Northern Pulp, Pictou Mill – 2015 Calendar Year

A summary of the sample location details is provided in Table 2.

Table 2 Sample Location Details

Parameter	Recovery Boiler	Lime Kiln	Smelt Dissolving Tank	Power Boiler Scrubber Stack	High Level Roof Vent
Stack Height – Above Grade (m)	69	37	51	51	65
Diameter / Equivalent Diameter (m)	3.51	1.22[3]	1.22	1.93	1.83
Stack/Duct Description	Circular	Circular	Circular	Circular	Circular
Stack Orientation	Vertical	Vertical	Vertical	Vertical	Vertical
Location of Source Testing	In Stack	In Stack	In Stack	In Stack	In Stack
Number of Sample Ports	4	2	2	2	1
Sample Port Diameter (m)	0.1	0.15	0.1	0.1	0.1
Location Upstream from any Disturbance,	>2	2	>2	>2	-
Location Downstream from any Disturbance,	1.45	8	6	> 4	-
Ideal or Non Ideal Flow Characteristics at The Sample Location[1]	Not Ideal	Not Ideal[2]	Not Ideal	Not Ideal	-
Total Number of Sample Points	24 (for PM)	24 (for PM) 1 (for TRS)	20 (for PM) 1 (for TRS)	24 (for PM)	1 (for TRS and Cl, ClO_2)
Number of Sample Points per Traverse (PM sampling)	12	12	10	12	NA
Sample Time per Point for PM samples (min)	5	5	5	5	NA
Sample time per Test for PM (min)	120	120	100	120	NA
Sample time per Test for combustion gas (min)	30	30	30	30	30 (for TRS) 60 (for Cl, ClO_2)
Sample time per Test for TRS (min)	NA	1,440	1,440	NA	1,440

[1] The exhaust gas flow characteristics at the sampling location are referred to as being "Ideal" if the sample ports are located in a straight section of stack at least eight stack diameters downstream and two stack diameters upstream of any flow disturbance.
[2] The lime kiln sampling location has been changed from ideal to not ideal due to the cyclonic flow.
[3] Field measurement – to be confirmed during the Winter/Spring Event

Quality Assurance / Quality Control

Throughout the stack testing program, rigorous quality assurance and quality control procedures will be applied to ensure the collection of reliable, representative, and reproducible emissions data. All equipment will be calibrated according to the protocols as prescribed by Environment Canada, and the US EPA. These calibrations include the following:

Pitots:	calibrated in a wind tunnel with probe and nozzles attached;
Gas meters:	calibrated against a critical orifice set;
Thermocouples:	calibrated using a potentiometric technique;
Nozzle:	four diameter measurements made using a micrometer across the sharpened edges; and
Combustion Gas Analyser:	2 point calibrations using span gases of known concentrations.

Calibration data will be provided in the final report.

Quality control checks will be performed at several stages during the testing program to ensure the collection of representative samples and the generation of valid results. These checks are performed by test personnel throughout the program under the guidance of the source testing crew chief. The Quality Control (QC) checks include the following:

- Use of standardized checklists and field notebooks to ensure completeness, traceability, and comparability of the process information and samples collected;
- Field checking of standardized forms by a second person to ensure accuracy and completeness;
- Strict adherence to sample chain-of-custody procedures;
- Use of appropriate field blanks (*e.g.*, filter and solution samples); and
- Leak checks of sample trains.

All internal quality assurance and quality control procedures will be strictly adhered to during all test programs to ensure the production of useful and high quality data throughout the course of the program.

Qualifications of Source Testing Team

The successful completion of this project requires the skills of competent and experienced professionals who have a strong commitment to complete the project quickly and efficiently and to produce high quality results. The source testing team we have assembled to meet the challenges of this assignment consists of highly trained professionals who bring a broad range of expertise and experience to the project. The following paragraphs provide brief descriptions of the qualifications of the source emissions testing team:

Senior Reviewer:

Reference: Pre-Test Plan for Source Emissions Testing Northern Pulp, Pictou Mill – 2015 Calendar Year

Project Manager and Report Writer:

Reference: Pre-Test Plan for Source Emissions Testing Northern Pulp, Pictou Mill – 2015 Calendar Year

Source Testing Team:

Schedule

Table 3 provides an overview of the proposed schedule to complete the testing, as described in the above sections, for the 2015 calendar year. Stantec will confirm actual test dates, in writing, with NSE within thirty days prior to the testing commencing.

Currently we are proposing to conduct the winter testing event within the week of March 9th.

Reference: Pre-Test Plan for Source Emissions Testing Northern Pulp, Pictou Mill – 2015 Calendar Year

Table 3 Proposed Schedule

Event	Proposed Date	Scope
Winter	February-March 31 (March 9th week)	Recovery and Power Boiler PM, gases, dissolving tank TRS
Spring	April-June 30	Recovery, Power Boiler, kiln, dissolving tank PM, gases, kiln, HLRV TRS, HLRV chlorine
Summer	July-Sept. 30	Recovery and Power Boiler PM, gases, dissolving tank TRS
Fall	October-Dec. 31	Recovery, Power Boiler, kiln, dissolving tank PM, $PM_{2.5}$, gases, kiln, HLRV TRS

Closing

Your timely written approval of this pre-test plan is greatly appreciated. If you have any questions, please do not hesitate to contact me directly at (902) 468-7777.

Regards,

STANTEC CONSULTING LTD.

Gillian Hatcher
Project Manager – Environmental Services
Phone: (902) 468-7777
Fax: (902) 468-9009
@stantec.com

Vicky Corning
Team Lead
Phone: (506) 457-3200
Fax: (506) 452-7652
@stantec.com

v:\1214\active\121413xxx\121413456_2015_stack_testing_np\reporting\pre-test plan\pre-test plan northern pulp_2015_vc.docx

Appendix B

Calibration Data

Stantec

VALLEY ENVIRONMENTAL CALIBRATION SERVICES

PITOT TUBE CALIBRATION REPORT

CLIENT - Stantec
PROBE ID - 8-1 FT M5
NOZZLE - #6- 0.1875"
DATE - March 3, 2015

FAN SPEED m/s	STANDARD PITOT (mm H2O)	PROBE PITOT (mm H2O)
0.00	0.00	0.00
12.1	8.70	13.00
13.7	11.20	16.80
15.2	13.90	20.70
16.6	16.50	24.70
18.1	19.70	29.90

PITOT FACTOR Cp = **0.816**

PITOT - **8-1 FT M5** **NOZZLE - #6- 0.1875"**
March 3, 2015

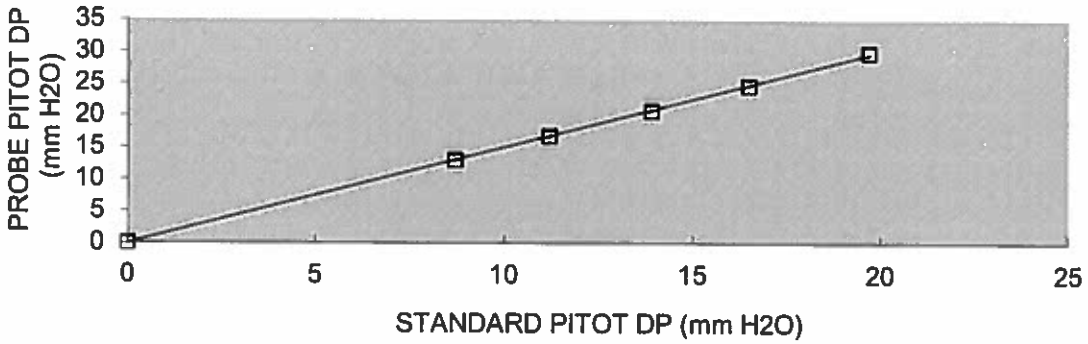

Technician: T. Ryan

Signature

VALLEY ENVIRONMENTAL SERVICES
160 Pony Drive #1
Newmarket, Ontario L3Y 7B6
PH: (905) 830 0136
FAX: (905) 830 0137

Tunnel	VES
Std. Pitot Cp	0.999
Static	-0.25
Barometric	29.1
Temperature	65
Abs Static	29.08

Pre-Test Dry Gas Meter - Control Unit Calibration

Date : 1/4/2015
Barometric Pressure, Pb : 30.06
Model Number : 1646
Calibrated By : JB
Job #:

Orifice Manometer Setting, deltaH (in. H2O)				Dry Gas Meter Volume, Vm (cu.ft)			Temperatures (F)				Time, theta (min)
								Dry Gas Meter			
						Total			Outlet, to	Average, tm	
1.0						5.460			58	58	10
1.5						5.377			60	60	8
2.3						5.823			61	62	7

Calculations

Orifice Manometer Setting, deltaH (in. H2O)	Dry Gas Correction Factor, gamma (Tolerance = 0.95 - 1.05, +/-1.5% of avg)	Orifice Pressure Differential (delta H@) yielding 0.75 cfm of air at 68F and 29.92 in.Hg as in. H2O (Tolerance = +/- 0.15 in.)	Orifice Coefficient Ko
1.0	1.023	1.668	0.742
1.5	1.018	1.762	0.725
2.3	1.021	1.755	0.724
Average	**1.021**	**1.728**	**0.730**

Pre-Test Dry Gas Meter - Control Unit Calibration

Date : 1/4/2015
Barometric Pressure, Pb : 30.06
Model Number : 1848
Calibrated By : JB
Job #:

Orifice Manometer Setting, deltaH (in. H2O)				Dry Gas Meter Volume, Vm (cu.ft)			Temperatures (F)				Time, theta (min)
								Dry Gas Meter			
						Total			Outlet, to	Average, tm	
0.9						5.293			59	59	10
1.5						5.230			61	62	8
2.3						5.657			63	63	7

Calculations

Orifice Manometer Setting, deltaH (in. H2O)	Dry Gas Correction Factor, gamma (Tolerance = 0.95 - 1.05, +/-1.5% of avg)	Orifice Pressure Differential (delta H@) yielding 0.75 cfm of air at 68F and 29.92 in.Hg as in. H2O (Tolerance = +/- 0.15 in.)	Orifice Coefficient Ko
0.9	1.057	1.608	0.754
1.5	1.049	1.759	0.727
2.3	1.054	1.751	0.725
Average	1.053	1.706	0.735

METHOD 5 DRY GAS METER CALIBRATION USING CRITICAL ORIFICES

1) Select three critical orifices to calibrate the dry gas meter which bracket the expected operating range.
2) Record barometric pressure before and after calibration procedure.
3) Run at tested vacuum (from Orifice Calibration Report), for a period of time necessary to achieve a minimum total volume of 5 cubic feet.
4) Record data and information in the GREEN cells, YELLOW cells are calculated.

DATE: 1/4/2015

METER PART #: 1848

METER SERIAL #: 16605036

CRITICAL ORIFICE SET SERIAL #: 1463s

BAROMETRIC PRESSURE (in Hg):	INITIAL	FINAL	AVG (P_{bar})
	30.06	30.06	30.06

IF Y VARIATION EXCEEDS 2.00%, ORIFICE SHOULD BE RECALIBRATED

ORIFICE #	RUN #	K' FACTOR (AVG)	TESTED VACUUM (in Hg)	DGM READINGS (FT^3) INITIAL	DGM READINGS (FT^3) FINAL	DGM READINGS (FT^3) NET (V_m)	TEMPERATURES °F AMBIENT	DGM INLET INITIAL	DGM INLET FINAL	DGM OUTLET INITIAL	DGM OUTLET FINAL	DGM AVG	ELAPSED TIME (MIN) θ	DGM ΔH (in H_2O)	(1) V_m (STD)	(2) V_{cr} (STD)	(3) Y	Y VARIATION (%)	$\Delta H_@$
15	1	0.4164	18	951.10	956.38	5.280	17.3	57	60	57	58	58	10.00	0.95	5.4208	5.7312	1.057		1.67
	2	0.4164	18	956.38	961.67	5.290	17.4	60	61	58	59	59.5	10.00	0.90	5.4147	5.7306	1.058		1.58
	3	0.4164	18	961.67	966.98	5.310	17.4	61	61	59	60	60.25	10.00	0.90	5.4273	5.7306	1.056		1.58
																AVG =	1.057	0.38	
18	1	0.5085	18	966.98	972.19	5.210	17.4	61	62	60	61	61	8.00	1.50	5.3252	5.5985	1.051		1.76
	2	0.5085	18	972.19	977.43	5.240	17.5	62	63	61	61	61.75	8.00	1.50	5.3482	5.5979	1.047		1.76
	3	0.5085	18	977.43	982.67	5.240	17.5	63	63	61	62	62.25	8.00	1.50	5.3430	5.5979	1.048		1.76
																AVG =	1.049	-0.43	
23	1	0.6307	18	982.67	988.30	5.630	17.4	63	64	62	62	62.75	7.00	2.30	5.7464	6.0759	1.057		1.75
	2	0.6307	18	988.30	993.96	5.660	17.5	64	65	62	63	63.5	7.00	2.30	5.7687	6.0753	1.053		1.75
	3	0.6307	18	993.96	999.64	5.680	17.5	65	65	63	63	64	7.00	2.30	5.7836	6.0753	1.050		1.75
																AVG =	1.054	0.05	

USING THE CRITICAL ORIFICES AS CALIBRATION STANDARDS:
The following equations are used to calculate the standard volumes of air passed through the DGM, V_m (std), and the critical orifice, V_{cr} (std), and the DGM calibration factor, Y. These equations are automatically calculated in the spreadsheet above.

AVERAGE DRY GAS METER CALIBRATION FACTOR, Y = **1.053**

AVERAGE $\Delta H_@$ = **1.71**

(1) $$Vm_{(std)} = K_1 * Vm * \frac{Pbar + (\Delta H / 13.6)}{Tm}$$

= Net volume of gas sample passed through DGM, corrected to standard conditions
K_1 = 17.64 °R/in. Hg (English), 0.3858 °K/mm Hg (Metric)
T_m = Absolute DGM avg. temperature (°R - English, °K - Metric)

(2) $$Vcr_{(std)} = K' * \frac{Pbar * \Theta}{\sqrt{Tamb}}$$

= Volume of gas sample passed through the critical orifice, corrected to standard conditions
T_{amb} = Absolute ambient temperature (°R - English, °K - Metric)
K' = Average K' factor from Critical Orifice Calibration

(3) $$Y = \frac{Vcr_{(std)}}{Vm_{(std)}}$$

= DGM calibration factor

$$\Delta H_@ = \left(\frac{0.75\,\theta}{V_{cr}(std)}\right)^2 \Delta H \left(\frac{V_m(std)}{V_m}\right)$$

METHOD 5 DRY GAS METER CALIBRATION USING CRITICAL ORIFICES

1) Select three critical orifices to calibrate the dry gas meter which bracket the expected operating range.
2) Record barometric pressure before and after calibration procedure.
3) Run at tested vacuum (from Orifice Calibration Report), for a period of time necessary to achieve a minimum total volume of 5 cubic feet.
4) Record data and information in the GREEN cells, YELLOW cells are calculated.

DATE: 1/4/2015

METER PART #: 1646

METER SERIAL #: 17485069

CRITICAL ORIFICE SET SERIAL #: 1463s

BAROMETRIC PRESSURE (in Hg):	INITIAL	FINAL	AVG (P_{bar})
	30.06	30.06	30.06

IF Y VARIATION EXCEEDS 2.00%, ORIFICE SHOULD BE RECALIBRATED

ORIFICE #	RUN #	K' FACTOR (AVG)	TESTED VACUUM (in Hg)	DGM READINGS (FT^3) INITIAL	DGM READINGS (FT^3) FINAL	DGM READINGS (FT^3) NET (V_m)	TEMPERATURES °F AMBIENT	TEMPERATURES °F DGM INLET INITIAL	TEMPERATURES °F DGM INLET FINAL	TEMPERATURES °F DGM OUTLET INITIAL	TEMPERATURES °F DGM OUTLET FINAL	TEMPERATURES °F DGM AVG	ELAPSED TIME (MIN) θ	DGM ΔH (in H_2O)	(1) V_m (STD)	(2) V_{cr} (STD)	(3) Y	Y VARIATION (%)	$\Delta H_@$
15	1	0.4164	18	898.93	904.37	5.440	17	58	58	58	58	58	10.00	0.95	5.5850	5.7330	1.026		1.67
	2	0.4164	18	904.37	909.84	5.470	16.5	58	58	58	57	57.75	10.00	0.95	5.6185	5.7360	1.021		1.67
	3	0.4164	18	909.84	915.31	5.470	16.5	58	59	57	58	58	10.00	0.95	5.6158	5.7360	1.021		1.67
																AVG =	1.023	0.23	
18	1	0.5085	17	915.41	920.77	5.360	16.7	60	61	59	59	59.75	8.00	1.50	5.4917	5.6026	1.020		1.76
	2	0.5085	17	920.77	926.15	5.380	17.1	61	62	59	60	60.5	8.00	1.50	5.5043	5.6002	1.017		1.76
	3	0.5085	17	926.15	931.54	5.390	17.3	62	61	60	60	60.75	8.00	1.50	5.5118	5.5991	1.016		1.76
																AVG =	1.018	-0.27	
23	1	0.6307	17	931.54	937.37	5.830	17.5	61	63	60	61	61.25	7.00	2.30	5.9677	6.0753	1.018		1.76
	2	0.6307	17	937.37	943.18	5.810	17.6	63	64	61	61	62.25	7.00	2.30	5.9358	6.0746	1.023		1.76
	3	0.6307	17	943.18	949.01	5.830	17.6	64	65	61	62	63	7.00	2.30	5.9477	6.0746	1.021		1.75
																AVG =	1.021	0.04	

USING THE CRITICAL ORIFICES AS CALIBRATION STANDARDS:
The following equations are used to calculate the standard volumes of air passed through the DGM, V_m (std), and the critical orifice, V_{cr} (std), and the DGM calibration factor, Y. These equations are automatically calculated in the spreadsheet above.

AVERAGE DRY GAS METER CALIBRATION FACTOR, Y = **1.021**

AVERAGE $\Delta H_@$ = **1.73**

(1) $$Vm_{(std)} = K_1 * Vm * \frac{Pbar + (\Delta H / 13.6)}{Tm}$$

= Net volume of gas sample passed through DGM, corrected to standard conditions
K_1 = 17.64 °R/in. Hg (English), 0.3858 °K/mm Hg (Metric)
T_m = Absolute DGM avg. temperature (°R - English, °K - Metric)

$$\Delta H_@ = \left(\frac{0.75\,\theta}{V_{cr}(std)}\right)^2 \Delta H \left(\frac{V_m(std)}{V_m}\right)$$

(2) $$Vcr_{(std)} = K' * \frac{Pbar * \Theta}{\sqrt{Tamb}}$$

= Volume of gas sample passed through the critical orifice, corrected to standard conditions
T_{amb} = Absolute ambient temperature (°R - English, °K - Metric)
K' = Average K' factor from Critical Orifice Calibration

(3) $$Y = \frac{Vcr_{(std)}}{Vm_{(std)}}$$

= DGM calibration factor

Calibration Data
Enerac 500 Combustion Analyzer

Stantec Consulting Ltd.
Location: Fredericton, NB
Date: March 11, 2015

Parameter	Unit	Span Gas Concentration	Pre-Test Calibration		Post Test Check	
			Date	11-Mar-15	Date	11-Mar-15
			Personnel	NGM	Personnel	NGM
			Ambient Air Reading	Span Gas Reading	Ambient Air Reading	Span Gas Reading
CO	ppm	200 1000	0	193 1012	0	200 1001
SO_2	ppm	200	0	178	0	200
NOX	ppm	200	0	198	0	200

VALLEY ENVIRONMENTAL CALIBRATION SERVICES

PITOT TUBE CALIBRATION REPORT

CLIENT - Stantec
PROBE ID - 2FT M5
NOZZLE - #8- 0.250"
DATE - February 23, 2015

FAN SPEED m/s	STANDARD PITOT (mm H2O)	PROBE PITOT (mm H2O)
0.00	0.00	0.00
12.2	8.90	14.10
13.6	11.10	17.80
15.1	13.70	21.80
16.7	16.70	26.40
18.1	19.70	31.10

PITOT FACTOR Cp = **0.794**

PITOT - **2FT M5** **NOZZLE - #8- 0.250"**
February 23, 2015

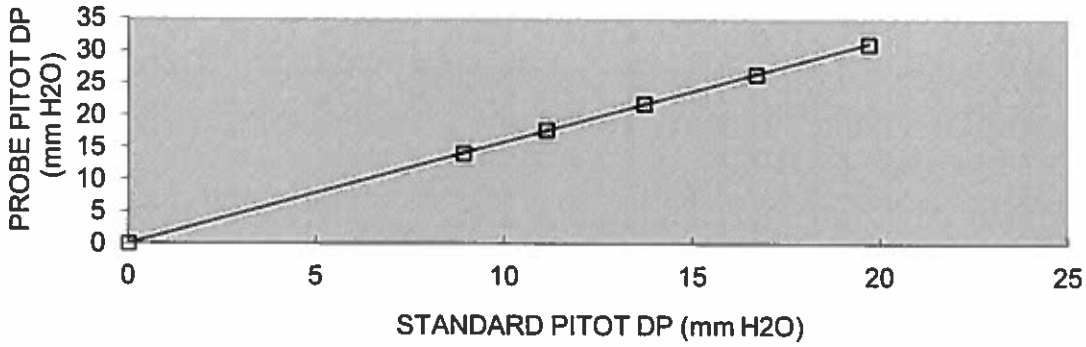

Technician: T. Ryan

Signature

VALLEY ENVIRONMENTAL SERVICES
160 Pony Drive #1
Newmarket, Ontario L3Y 7B6
PH: (905) 830 0136
FAX: (905) 830 0137

Tunnel	VES
Std. Pitot Cp	0.999
Static	-0.25
Barometric	29.15
Temperature	65
Abs Static	29.13

Stantec Consulting Ltd.

Steel Nozzle Calibration Data Sheet

NozzleID	Nozzle Diameter (inches)					
Set - 1	<1>	<2>	<3>	<4>	Hi-Lo	Avg.
1-4	0.125	0.124	0.125	0.125	0.001	**0.125**
1-6	0.175	0.173	0.165	0.175	0.010	**0.172**
1-8	0.236	0.232	0.234	0.232	0.004	**0.234**
1-10	0.307	0.305	0.308	0.305	0.003	**0.306**
1-12	0.367	0.372	0.367	0.371	0.005	**0.369**
1-14	0.434	0.434	0.433	0.434	0.001	**0.434**
1-16	0.500	0.497	0.503	0.501	0.006	**0.500**

QA/QC Check

Each Diameter Measured To Within = 0.001 Inches

High - Low </= 0.004

Prepared By: JJB

Date: Feb 05, 2015

Appendix C

Field Data Sheets

Stantec

MOISTURE FIELD DATA SHEET

Project No.: 121413456
Client: Northern Pulp
Plant: Pictou NS
Location: Power Boiler
Test: PM-1
Date: Mar 10, 2015
Analyst: TBH

Stantec

Moisture Data

Impinger No.	Impinger Contents	Final Weight (g)	Tare Weight (g)	Weight of Moisture (g)
1	100 mL H2O	819.5	726.5	93
2	100 mL H2O	643.1	603.7	39.4
3	Blank	667.7	657.0	10.7
4	200g Silica Gel	994.1	980.8	13.3
		Total Weight Gain (g)		156.4
		Moisture Volume (mL)		156.4

Volume H_2O Collected: 156.4 ml
X 0.048 = 7.51 ft^3 H_2O (Vwc)

DGM Final 50.82 ft^3
DGM Initial 0.92 ft^3
Final - Initial = 49.9 ft^3 (Vmc)

Moisture = $\frac{Vwc}{(Vwc + Vmc)}$

Moisture = 0.1308

Moisture = 0.13

1/2

SOURCE TESTING FIELD DATA SHEET

Job No.: 12141345G
Client: Northern Pulp
Plant: Pictou, NS
Location: Power Boiler
Test: PM-1
Date: Mar 10, 2015
Operators: TBH/MM
Gamma: 1.053
Delta H@: 1.706
Pitot Coeff.: 0.816
Start: 7:15
Finish:

Static Pressure (In.H2O): 0.20
Port Length (In): 6"
Stack Dia. (In.): 76"
Probe Length (ft): 8'
Nozzle ID (In.): 1-6 (0.172)
Console S/N: 1848

Pre-Test Leak Check: ✓
Vacuum Pressure: -18
Post-Test Leak Check: ✓
Vacuum Pressure: -18

K': 0.63

Traverse Point	Time (min)	Stack Gas Temp., Ts (F)	Velocity Head, dP (In.H2O)	Orifice dH (In.H2O)	Gas Meter Volume (cu.ft)	Probe Temp. (F)	Oven Temp. (F)	Impinger Outlet Temp. (F)	Gas Meter Temp. (F) In	Gas Meter Temp. (F) Out	Pump Vacuum (In.Hg)
	0				0.92						
1	2.5	121	1.25	0.69	2.05	264	225	37	52	52	-1
	5	120	1.00	0.55	3.03	258	226	42	52	52	-1
2	7.5	119	1.05	0.59	4.04	272	225	43	52	52	-1
	10	119	1.05	0.58	5.04	274	226	43	52	52	-1
3	12.5	120	1.10	0.61	6.07	274	236	45	53	52	-1
	15	119	1.10	0.61	7.12	273	225	45	53	52	-1
4	17.5	119	1.10	0.61	8.17	252	226	45	54	53	-1
	20	119	1.15	0.64	9.21	249	233	45	55	53	-1
5	22.5	119	1.20	0.67	10.27	248	235	47	56	53	-1
	25	119	1.20	0.67	11.30	250	241	49	56	54	-1
6	27.5	119	1.25	0.70	12.92	263	243	49	56	54	-1
	30	121	1.20	0.67	13.55	267	248	51	57	54	-1
7	32.5	121	1.25	0.70	14.67	270	251	51	57	54	-1
	35	122	1.50	0.84	15.88	266	254	51	57	54	-1
8	37.5	122	1.45	0.81	17.08	261	256	55	57	54	-1
	40	120	1.65	0.93	18.20	259	257	56	57	54	-1
9	42.5	120	1.70	0.95	19.65	280	260	52	57	54	-1
	45	120	1.75	0.98	20.92	282	259	52	57	54	-1
10	47.5	120	1.85	1.03	22.26	287	259	50	58	55	-1
	50	120	1.90	1.06	23.57	297	264	50	58	55	-1
11	52.5	120	1.90	1.06	24.95	300	266	50	58	55	-1
	55	120	2.00	1.12	26.32	300	268	56	60	56	-1
12	57.5	120	2.10	1.17	27.72	300	269	56	60	56	-1
	60	120	2.10	1.17	29.09 *	300	271	57	60	56	-1

2/2

SOURCE TESTING FIELD DATA SHEET

Job No.: 12141345 6
Client: Norpac Pulp
Plant: Pictou, NS
Location: Power Boiler
Test: PM-1
Date: Mar 10, 2015
Operators: TBH/MM
Gamma: 1.053
Delta H@: 1.706
Pitot Coeff.: 0.8160
Start :
Finish :

Static Pressure (in.H2O): 0.20
Port Length (in): 6"
Stack Dia. (in.): 76"
Probe Length (ft): 8'
Nozzle ID (in.): 1-6 (0.172)
Console S/N: 1848

Pre-Test Leak Check:
Vacuum Pressure:
Post-Test Leak Check:
Vacuum Pressure:

K': 0.67

Traverse Point	Time (min)	Stack Gas Temp., Ts (F)	Velocity Head, dP (in.H2O)	Orifice dH (in.H2O)	Gas Meter Volume (cu.ft)	Probe Temp. (F)	Oven Temp. (F)	Impinger Outlet Temp. (F)	Gas Meter Temp. (F) In	Gas Meter Temp. (F) Out	Pump Vacuum (in.Hg)
	0				30.33						
1	2.5	120	0.82	0.46	31.25	297	265	63	57	57	-1
	5	120	0.82	0.46	32.18	297	266	64	57	57	-1
2	7.5	120	0.85	0.48	33.09	298	283	64	57	57	-1
	10	126	0.87	0.49	34.04	297	294	64	57	57	-1
3	12.5	127	0.87	0.49	34.96	297	268	64	58	57	-1
	15	127	0.59	0.32	35.83	288	251	64	58	57	-1
4	17.5	128	0.53	0.29	36.58	294	254	64	58	57	-1
	20	130	0.50	0.28	37.34	291	257	64	57	57	-1
5	22.5	130	0.52	0.29	38.09	286	257	64	57	57	-1
	25	130	0.52	0.29	38.84	287	258	63	58	57	-1
6	27.5	130	0.52	0.29	39.58	282	259	62	59	57	-1
	30	130	0.65	0.36	40.35	283	258	61	59	57	-1
7	32.5	129	0.65	0.36	41.17	281	257	61	59	58	-1
	35	128	0.75	0.42	42.00	278	256	59	59	58	-1
8	37.5	127	0.75	0.42	42.88	292	253	56	60	58	-1
	40	128	0.85	0.47	43.77	295	251	53	60	58	-1
9	42.5	129	0.85	0.47	44.69	297	249	51	60	58	-1
	45	128	0.75	0.41	45.61	296	246	49	59	58	-1
10	47.5	129	0.75	0.42	46.47	293	246	48	60	59	-1
	50	129	0.75	0.42	47.34	286	246	47	59	58	-1
11	52.5	129	0.75	0.42	48.21	284	244	46	58	58	-1
	55	128	0.75	0.42	49.08	281	243	46	59	58	-1
12	57.5	128	0.75	0.42	49.95	280	241	44	59	58	-1
	60	128	0.75	0.42	50.82	281	240	44	60	58	-1

COMBUSTION GAS ANALYSIS CONCENTRATION FIELD SHEET

Sampling Methodology: Environment Canada EPS 1/RM/15

Stantec

Project No.: 121413456
Client: Northern Pulp
Plant: Pictou, NS
Location: Power Boiler

Fuel Type: biomass

Time Start: 2145
Time Finish: 3:15

Test No.: Gas #1
Date: Mar 16/15

Personnel: TBH

Time	Concentrations							
	O_2 (%)	CO_2 (%)	CO (ppm)	SO_2 (ppm)	NO_x (ppm)	NO (ppm)	NO_2 (ppm)	THC (%)
0	15.1	5.6	0	0	32			
5	14.5	6.1	0	0	47			
10	14.8	6.1	0	0	49			
15	14.7	6.1	0	0	50			
20	14.8	6.1	0	0	50			
25	14.7	6.1	0	0	45			
30	14.7	6.1	0	0	50			

MOISTURE FIELD DATA SHEET

Project No.: 121413456
Client: Northern Pulp
Plant: Power Boiler
Location: Pictou, NS
Test: PM-2
Date: Mar 10, 2015
Analyst: JJB/TBH

Stantec

Moisture Data

Impinger No.	Impinger Contents	Final Weight (g)	Tare Weight (g)	Weight of Moisture (g)
1	100 mL H2O	994.3	731.4	262.9
2	100 mL H2O	651.2	628.0	23.2
3	Blank	659.5	659.5	-0.1
4	200g Silica Gel	998.4	994.0	4.4
		Total Weight Gain (g)		290.5
		Moisture Volume (mL)		290.5

Volume H_2O Collected: 290.5 ml
X 0.048 = 13.94 ft^3 H_2O (Vwc)

DGM Final 74.18 ft^3
DGM Initial 52.20 ft^3
Final - Initial = 21.98 ft^3 (Vmc)

Moisture = $\frac{Vwc}{(Vwc + Vmc)}$

Moisture = 0.144966

Moisture = 0.145

1/2

SOURCE TESTING FIELD DATA SHEET

Job No.: 121413456
Client: Northern Pulp
Plant: Power Boiler
Location: Pictou, NS
Test: PM-2
Date: M
Operators: JJB/MM
Gamma: 1.053
Delta H@: 1.706
Pitot Coeff.: 0.816
Start : 8:47
Finish :

Static Pressure (In.H2O): 0.20
Port Length (In): 6"
Stack Dia. (In.): 76"
Probe Length (ft): 8'
Nozzle ID (In.): 1-6(0.172)
Console S/N: 1848

Pre-Test Leak Check:
Vacuum Pressure:
Post-Test Leak Check:
Vacuum Pressure:

K': 0.67

Traverse Point	Time (min)	Stack Gas Temp., Ts (F)	Velocity Head, dP (In.H2O)	Orifice dH (In.H2O)	Gas Meter Volume (cu.ft)	Probe Temp. (F)	Oven Temp. (F)	Impinger Outlet Temp. (F)	Gas Meter Temp. (F)		Pump Vacuum (In.Hg)
									In	Out	
	0				52.28						
1	2.5	141	1.6	0.89	53.52	291	263	36	40	40	-1
	5	144	1.5	0.83	54.73	290	267	37	40	40	-1
2	7.5	145	1.8	1.0	55.98	288	264	38	39	40	-1
	10	145	1.8	1.0	57.28	285	260	37	40	40	-1
3	12.5	148	1.7	0.94	58.54	281	263	36	40	40	-1
	15	148	1.6	0.88	59.78	280	262	36	40	40	-1
4	17.5	147	1.5	0.83	60.98	280	274	36	41	40	-1
	20	142	1.5	0.84	62.17	282	275	36	41	40	-1
5	22.5	146	1.0	0.55	63.26	280	266	36	41	40	-1
	25	148	1.0	0.55	64.21	286	256	37	42	40	-1
6	27.5	149	0.65	0.36	65.14	296	275	36	42	40	-1
	30	151	0.6	0.33	65.91	293	251	37	42	40	-1
7	32.5	151	0.5	0.27	66.65	293	255	36	42	40	-1
	35	151	0.5	0.27	67.33	292	242	36	42	40	-1
8	37.5	150	0.45	0.25	68.02	292	259	36	42	40	-1
	40	149	0.45	0.25	68.68	291	257	35	42	41	-1
9	42.5	151	0.45	0.25	69.35	291	262	35	42	41	-1
	45	152	0.45	0.25	70.01	292	256	34	42	41	-1
10	47.5	152	0.45	0.25	70.67	295	264	34	42	41	-1
	50	151	0.45	0.25	71.32	296	258	34	43	41	-1
11	52.5	150	0.5	0.28	72.01	294	266	34	43	41	-1
	55	151	0.5	0.28	72.73	292	256	34	43	42	-1
12	57.5	149	0.5	0.28	73.45	288	266	34	43	42	-1
	60	149	0.5	0.28	74.18	286	157	34	44	42	-1

2/2

SOURCE TESTING FIELD DATA SHEET

Job No.: 121413456
Client: NorMira Pulp
Plant: Pictou, NS
Location: Power Boiler
Test: PM-2
Date: May 11, 2015
Operators: JB / MM
Gamma: 1.053
Delta H@: 1.7016
Pitot Coeff.: 0.8116
Start: 8:47
Finish:

Static Pressure (in.H2O): 0.20
Port Length (in): 6.11
Stack Dia. (in.): 76"
Probe Length (ft): 8'
Nozzle ID (in.): 1-6 (0.172)
Console S/N: 1848

Pre-Test Leak Check:
Vacuum Pressure:
Post-Test Leak Check:
Vacuum Pressure:

K': 0.67

Traverse Point	Time (min)	Stack Gas Temp., Ts (F)	Velocity Head, dP (in.H2O)	Orifice dH (in.H2O)	Gas Meter Volume (cu.ft)	Probe Temp. (F)	Oven Temp. (F)	Impinger Outlet Temp. (F)	Gas Meter Temp. (F) In	Gas Meter Temp. (F) Out	Pump Vacuum (in.Hg)
	0				74.18						
1	2.5	149	1.50	0.77	75.95 *	301	270	34	43	43	-1
	5	149	1.45	0.74	77.21	300	268	34	43	43	-1
2	7.5	152	1.30	0.66	78.25	298	273	35	45	43	-1
	10	153	1.20	0.61	79.16	298	290	35	45	43	-1
3	12.5	150	0.9	0.46	80.21	298	272	38	45	43	-1
	15	153	0.9	0.46	81.08	283	255	38	45	43	-1
4	17.5	152	0.65	0.33	81.93	296	267	38	46	43	-1
	20	149	0.65	0.33	82.68	298	260	38	46	43	-1
5	22.5	150	0.50	0.26	83.41	298	268	38	46	43	-1
	25	153	0.50	0.25	83.97	295	259	38	46	43	-1
6	27.5	154	0.90	0.46	84.74	298	267	38	46	44	-1
	30	151	0.95	0.49	85.63	294	266	38	46	44	-1
7	32.5	150	1.30	0.67	86.59	296	266	38	47	44	-1
	35	147	1.40	0.72	87.69	296	245	39	47	44	-1
8	37.5	150	1.80	0.93	88.84	298	255	40	48	45	-1
	40	147	1.80	0.93	90.09	297	266	39	48	45	-1
9	42.5	148	1.80	0.93	91.33	297	263	39	48	45	-1
	45	150	1.80	0.93	92.56	296	259	39	49	46	-1
10	47.5	150	1.80	0.93	93.80	295	261	39	49	46	-1
	50	145	1.80	0.93	95.05	292	272	40	49	46	-1
11	52.5	142	1.80	0.93	96.31	292	260	39	49	46	-1
	55	142	1.80	0.94	97.55	292	266	40	49	46	-1
12	57.5	142	1.80	0.94	98.80	291	265	40	49	46	-1
	60	141	1.80	0.94	100.05	289	258	40	49	46	-1

COMBUSTION GAS ANALYSIS CONCENTRATION FIELD SHEET

Sampling Methodology: Environment Canada EPS 1/RM/15

Stantec

Project No.: 121413456
Client: Northern Pulp
Plant: Pictou, NS
Location: Power Boiler

Fuel Type: biomass

Time Start: 9:45
Time Finish: 10:15

Test No.: Gas # 2, 4
Date: Mar 11, 2015

Personnel: TBH

Time	Concentrations							
	O_2 (%)	CO_2 (%)	CO (ppm)	SO_2 (ppm)	NO_X (ppm)	NO (ppm)	NO_2 (ppm)	THC (%)
0	10.6	10.0	2552	0	15			
5	10.6	10.0	1498	0	16			
10	11.0	9.5	1360	0	17			
15	11.3	9.2	1445	0	17			
20	11.6	8.9	1901	0	15			
25	10.4	10.3	1870	0	16			
30	9.9	10.6	1511	0	17			
0	10.3	10.1	1249	0	17			
1:00 5	10.0	10.7	2928	0	16			
10	10.4	10.4	1370	0	24			
1:30 15	9.0	11.7	2984	0	27			
20	9.0	11.6	1749	0	33			
25	9.4	11.0	1627	0	34			
30	9.8	10.5	1646	0	33			

MOISTURE FIELD DATA SHEET

Project No.: 121413456
Client: NP.
Plant: Power Boiler
Location: Pictou, NS
Test: PM-3
Date: Nov. 11, 2015
Analyst: TBH

Stantec

Moisture Data

Impinger No.	Impinger Contents	Final Weight (g)	Tare Weight (g)	Weight of Moisture (g)
1	100 mL H2O	945.6	715.5	230.1
2	100 mL H2O	643.0	625.6	17.4
3	Blank	653.0	650.7	2.3
4	200g Silica Gel	1004.4	994.3	10.1
		Total Weight Gain (g)		260
		Moisture Volume (mL)		

Volume H_2O Collected: 260 ml

X 0.048 = 12.48 ft^3 H_2O (Vwc)

DGM Final 144.18 ft^3

DGM Initial 100.51 ft^3

Final - Initial = 43.67 ft^3 (Vmc)

$$\text{Moisture} = \frac{Vwc}{(Vwc + Vmc)}$$

$$\text{Moisture} = \frac{12.48}{12.48 + 43.67}$$

Moisture = 22.2%

4/2

SOURCE TESTING FIELD DATA SHEET

Job No.: 121413450
Client: Northern Pulp
Plant: Arthur, NS
Location: Power Boiler
Test: PM-3
Date: April 11, 2015
Operators: TGH/MM
Gamma: 1.053
Delta H@: 1.706
Pitot Coeff.: 0.816
Start: 12:00
Finish:

Static Pressure (in.H2O): 0.20
Port Length (in): 6"
Stack Dia. (in.): 76"
Probe Length (ft): 8'
Nozzle ID (in.): 1-6 (0.172)
Console S/N: 1848

Pre-Test Leak Check:
Vacuum Pressure:
Post-Test Leak Check:
Vacuum Pressure:

K': 0.62

Traverse Point	Time (min)	Stack Gas Temp., Ts (F)	Velocity Head, dP (in.H2O)	Orifice dH (in.H2O)	Gas Meter Volume (cu.ft)	Probe Temp. (F)	Oven Temp. (F)	Impinger Outlet Temp. (F)	Gas Meter Temp. (F)		Pump Vacuum (in.Hg)
									In	Out	
	0				100.51						
1	2.5	151	0.93	0.48	101.45	300	225	41	48	48	-1
	5	152	0.99	0.51	102.42	298	225	43	50	49	-1
2	7.5	152	0.98	0.50	103.35	300	226	43	50	49	-1
	10	150	0.80	0.41	104.20	300	227	43	50	49	-1
3	12.5	150	0.50	0.25	104.99	300	226	43	52	50	-1
	15	148	0.52	0.27	105.59	300	255	42	53	50	-1
4	17.5	149	0.47	0.24	106.25	301	257	44	52	51	-1
	20	150	0.47	0.24	106.91	273	257	44	52	51	-1
5	22.5	150	0.44	0.23	107.55	281	261	44	52	52	-1
	25	148	0.40	0.21	108.20 *	287	265	44	52	52	-1
6	27.5	151	0.70	0.37	108.97	294	265	44	52	52	-1
	30	151	0.70	0.37	109.77	300	256	42	51	52	-1
7	32.5	151	1.05	0.54	110.76	299	252	42	52	52	-1
	35	152	1.10	0.57	111.80	297	253	42	52	52	-1
8	37.5	152	1.40	0.73	112.85	300	248	42	52	52	-1
	40	148	1.40	0.73	113.98	297	242	41	53	51	-1
9	42.5	149	1.70	0.89	115.14	295	218	42	53	52	-1
	45	144	1.60	0.84	116.36	295	225	42	53	52	-1
10	47.5	142	1.70	0.90	117.57	296	220	41	53	52	-1
	50	142	1.70	0.90	118.81	295	213	40	53	52	-1
11	52.5	147	1.70	0.89	120.06	293	214	40	53	53	-1
	55	147	1.70	0.89	121.31	290	220	39	53	52	-1
12	57.5	147	1.70	0.89	122.55	290	219	39	53	52	-1
	60	144	1.70	0.89	123.98	290	233	39	54	52	-1

2/2

SOURCE TESTING FIELD DATA SHEET

Job No.: 121413456
Client: Northern Pulp
Plant: Pictou, NS
Location: Power Boiler
Test: PM-3
Date: Nov 11, 2013
Operators: JBH/MM
Gamma: 1.053
Delta H@: 1.706
Pitot Coeff.: 0.816
Start :
Finish :

Static Pressure (in.H2O): 0.20
Port Length (in): 6"
Stack Dia. (in.): 76"
Probe Length (ft): 8'
Nozzle ID (in.): 1-6 (0.173)
Console S/N: 1848

Pre-Test Leak Check:
Vacuum Pressure:
Post-Test Leak Check:
Vacuum Pressure:

K': 0.62

Traverse Point	Time (min)	Stack Gas Temp., Ts (F)	Velocity Head, dP (in.H2O)	Orifice dH (in.H2O)	Gas Meter Volume (cu.ft)	Probe Temp. (F)	Oven Temp. (F)	Impinger Outlet Temp. (F)	Gas Meter Temp. (F)		Pump Vacuum (in.Hg)
									In	Out	
	0				123.98						
1	2.5	147	1.50	0.79	125.02	293	226	42	53	53	-1
	5	148	1.50	0.78	126.17	290	227	41	53	53	-1
2	7.5	146	1.40	0.74	127.32	288	227	39	53	53	-1
	10	149	1.40	0.73	128.44	288	231	38	54	53	-1
3	12.5	152	1.30	0.68	129.56	285	231	39	54	53	-1
	15	149	1.30	0.68	130.67	283	237	38	54	53	-1
4	17.5	149	1.30	0.68	131.77	280	240	39	54	53	-1
	20	149	1.20	0.63	132.85	282	244	39	54	53	-1
5	22.5	152	1.20	0.62	133.89	282	243	40	54	53	-1
	25	149	1.20	0.63	134.91	289	240	41	53	53	-1
6	22.5	149	0.90	0.47	135.85	294	239	41	53	53	-1
	30	147	0.90	0.47	136.80	296	234	42	54	53	-1
7	32.5	149	0.65	0.34	137.68	297	224	43	54	53	-1
	35	151	0.65	0.34	138.53	291	206	44	53	53	-1
8	37.5	151	0.45	0.24	139.28	289	214	44	53	53	-1
	40	152	0.45	0.23	139.93	288	213	44	53	53	-1
9	42.5	152	0.30	0.16	140.56	284	210	44	53	53	-1
	45	151	0.30	0.16	141.16	285	207	44	53	53	-1
10	47.5	151	0.20	0.10	141.70	284	193	44	53	53	-1
	50	150	0.20	0.10	142.20	285	176	45	53	53	-1
11	52.5	150	0.20	0.10	142.70	284	175	45	53	53	-1
	55	150	0.20	0.10	143.19	284	191	44	53	53	-1
12	57.5	150	0.20	0.10	143.68	284	207	43	53	53	-1
	60	148	0.20	0.10	144.18	288	186	43	53	53	-1

COMBUSTION GAS ANALYSIS CONCENTRATION FIELD SHEET

Sampling Methodology: Environment Canada EPS 1/RM/15

Stantec

Project No.: 121413456
Client: Northern Pulp
Plant: Pictou NS
Location: Power Boiler

Fuel Type: Biomass

Time Start: 12:15
Time Finish: 12:45

Test No.: Gas # 3
Date: Mar 11, 2015

Personnel: TBF

Time	Concentrations							
	O_2 (%)	CO_2 (%)	CO (ppm)	SO_2 (ppm)	NO_X (ppm)	NO (ppm)	NO_2 (ppm)	THC (%)
0	12.1	8.6	3163	0	16			
5	11.5	9.1	2865	0	21			
10	11.1	9.5	2296	0	22			
15	11.6	9.1	1540	0	24			
20	12.1	8.5	1760	0	23			
25	10.9	9.6	1129	0	16			
30	10.2	10.4	1800	0	25			

MOISTURE FIELD DATA SHEET

Project No.: 121413456
Client: Northern Pulp
Plant: Power Boiler
Location: Pictou NS
Test: PM-4
Date: March 11, 2015
Analyst: TBH

Stantec

Moisture Data

Impinger No.	Impinger Contents	Final Weight (g)	Tare Weight (g)	Weight of Moisture (g)
1	100 mL H2O	964.7	715.5	
2	100 mL H2O	757.9	735.2	
3	Blank	573.0	570.6	
4	200g Silica Gel	941.7	931.3	
		Total Weight Gain (g)		
		Moisture Volume (mL)		

Volume H_2O Collected: _____ ml

X 0.048 = _____ ft^3 H_2O (Vwc)

DGM Final _____ ft^3

DGM Initial _____ ft^3

Final - Initial = _____ ft^3 (Vmc)

$$\text{Moisture} = \frac{Vwc}{(Vwc + Vmc)}$$

Moisture = _____

Moisture = _____

-/2

SOURCE TESTING FIELD DATA SHEET

Job No.: 121413456
Client: Northern Pulp
Plant: Power Boiler
Location: Pictou, NS
Test: PM-4
Date: Mar 11, 2015
Operators: JJB/TGH/JH
Gamma: 1.053
Delta H@: 1.706
Pitot Coeff.: 0.816
Start :
Finish :

Static Pressure (in.H2O): 0.20
Port Length (in): 6"
Stack Dia. (in.): 76"
Probe Length (ft): 8'
Nozzle ID (in.): 1-6 (0.175)
Console S/N: 1848

Pre-Test Leak Check:
Vacuum Pressure:
Post-Test Leak Check:
Vacuum Pressure:

K' : 0.62

Traverse Point	Time (min)	Stack Gas Temp., Ts (F)	Velocity Head, dP (in.H2O)	Orifice dH (in.H2O)	Gas Meter Volume (cu.ft)	Probe Temp. (F)	Oven Temp. (F)	Impinger Outlet Temp. (F)	Gas Meter Temp. (F)		Pump Vacuum (in.Hg)
									In	Out	
	0				168.21						
1	2.5	134	1.00	0.54	169.20	295	190	45	58	57	-1
	5	151	1.00	0.52	170.18	296	197	44	59	58	-1
2	7.5	155	1.00	0.52	171.18	298	202	43	59	57	-1
	10	153	1.00	0.52	172.17	297	208	43	59	58	-1
3	12.5	154	0.60	0.31	173.14	295	216	43	60	58	-1
	15	151	0.60	0.31	173.98	292	218	42	60	58	-1
4	17.5	150	0.45	0.24	174.71	296	217	43	60	58	-1
	20	147	0.45	0.24	175.38	299	220	43	60	59	-1
5	22.5	144	0.40	0.21	176.04	298	219	43	60	59	-1
	25	144	0.35	0.19	176.68	295	278	43	60	59	-1
6	27.5	145	0.95	0.51	177.33	296	264	44	60	59	-1
	30	142	1.00	0.53	178.27	293	260	43	60	59	-1
7	32.5	145	1.50	0.80	179.31	298	268	42	60	59	-1
	35	147	1.50	0.80	180.52	295	260	42	60	59	-1
8	37.5	145	1.80	0.96	181.70	297	265	43	60	59	-1
	40	142	1.80	0.96	182.96	297	266	42	60	59	-1
9	42.5	139	1.90	1.07	184.27	297	259	42	60	59	-1
	45	140	1.90	1.02	185.62	297	261	42	59	59	-1
10	47.5	143	1.90	1.02	186.93	297	270	42	59	59	-1
	50	137	1.90	1.02	188.27	295	263	42	59	58	-1
11	52.5	137	1.80	0.97	189.58	298	272	43	59	58	-1
	55	140	1.80	0.97	190.98	297	260	44	60	58	-1
12	57.5	138	1.80	0.97	192.18	293	267	44	60	58	-1
	60	135	1.80	0.97	193.49	294	267	44	60	58	-1

1/2

SOURCE TESTING FIELD DATA SHEET

Job No.: 121413456
Client: Northern Pulp
Plant: Power Boiler
Location: Pictou, NS
Test: PM-4
Date: May 11 2015
Operators: JJB/TBH/JH
Gamma: 1.053
Delta H@: 1.706
Pitot Coeff.: 0.816
Start: 2:52
Finish:

Static Pressure (in.H2O): 0.20
Port Length (in): 6"
Stack Dia. (in.): 76"
Probe Length (ft): 8'
Nozzle ID (in.): 1-6 (0.173)
Console S/N: 1848

Pre-Test Leak Check:
Vacuum Pressure:
Post-Test Leak Check:
Vacuum Pressure:

K': 0.62

Traverse Point	Time (min)	Stack Gas Temp., Ts (F)	Velocity Head, dP (in.H2O)	Orifice dH (in.H2O)	Gas Meter Volume (cu.ft)	Probe Temp. (F)	Oven Temp. (F)	Impinger Outlet Temp. (F)	Gas Meter Temp. (F)		Pump Vacuum (in.Hg)
									In	Out	
	0				144.80						-1
1	2.5	142	1.50	0.79	146.05	286	242	44	50	50	-1
	5	142	1.50	0.79	147.23	288	247	44	51	51	-1
2	7.5	145	1.60	0.84	148.45	289	250	42	52	51	-1
	10	145	1.60	0.84	149.68	290	257	42	53	51	-1
3	12.5	150	1.50	0.78	150.87	288	261	41	54	51	-1
	15	147	1.50	0.79	152.05	288	263	41	55	52	-1
4	17.5	148	1.50	0.79	153.22	288	267	40	56	52	-1
	20	151	1.40	0.73	154.39	292	267	40	57	53	-1
5	22.5	152	1.40	0.73	155.53	293	270	40	58	53	-1
	25	149	1.40	0.73	156.66	298	266	41	59	54	-1
6	27.5	149	0.90	0.47	157.67	296	261	42	59	55	-1
	30	151	0.90	0.47	158.59	297	264	43	60	55	-1
7	32.5	151	0.60	0.31	159.44	297	263	42	59	56	-1
	35	150	0.60	0.31	160.21	297	253	43	59	56	-1
8	37.5	150	0.55	0.29	160.97	295	250	44	58	56	-1
	40	155	0.55	0.29	161.73	294	254	44	58	56	-1
9	42.5	153	0.55	0.29	162.49	297	255	43	58	57	-1
	45	149	0.55	0.29	163.23	293	252	43	58	57	-1
10	47.5	151	0.60	0.31	163.98	296	257	44	58	57	-1
	50	154	0.60	0.31	164.76	296	257	43	58	57	-1
11	52.5	154	0.70	0.37	165.54	297	257	44	58	57	-1
	55	153	0.70	0.37	166.38	296	255	44	57	57	-1
12	57.5	152	0.85	0.45	167.26	297	255	44	58	57	-1
	60	152	0.75	0.39	168.21	297	258	44	59	57	-1

MOISTURE FIELD DATA SHEET

Project No.: 121413456
Client: Northern Pulp
Plant: Recovery Boiler
Location: Pictou, NS
Test: PM-1
Date: Mar 10
Analyst: JJB/TBH/JH

Stantec

Moisture Data

Impinger No.	Impinger Contents	Final Weight (g)	Tare Weight (g)	Weight of Moisture (g)
1	100 mL H2O	973.5	726.0	247.5
2	100 mL H2O	974.0	729.6	244.4
3	Blank	596.6	570.9	25.7
4	200g Silica Gel	1013.1	990.6	22.5
		Total Weight Gain (g)		540.1
		Moisture Volume (mL)		540.1

Volume H_2O Collected: 540.1 ml

X 0.048 = 25.92 ft^3 H_2O (Vwc)

DGM Final 269.25 ft^3

DGM Initial 210.34 ft^3

Final - Initial = 58.91 ft^3 (Vmc)

Moisture = $\frac{Vwc}{(Vwc + Vmc)}$ 84.83

Moisture = 0.306

Moisture = 0.31

4/2

SOURCE TESTING FIELD DATA SHEET

Job No.: 12413456
Client: Northern Pulp
Plant: Pictou, NS
Location: Recovery Boiler
Test: PM-1
Date: Mar 10/15
Operators: TBH/JB
Gamma: 1.021
Delta H@: 1.728
Pitot Coeff.: 0.774
Start: 9:00
Finish:

Static Pressure (in.H2O): 1.10
Port Length (in): 6"
Stack Dia. (in.): 138"
Probe Length (ft): 21
Nozzle ID (in.): 1-8 (0.234)
Console S/N: 1646

Pre-Test Leak Check: -18
Vacuum Pressure:
Post-Test Leak Check:
Vacuum Pressure: -13

K': 1.70

Traverse Point	Time (min)	Stack Gas Temp., Ts (F)	Velocity Head, dP (in.H2O)	Orifice dH (in.H2O)	Gas Meter Volume (cu.ft)	Probe Temp. (F)	Oven Temp. (F)	Impinger Outlet Temp. (F)	Gas Meter Temp. (F) In	Gas Meter Temp. (F) Out	Pump Vacuum (in.Hg)
	0				210.34						
1	2.5	152	0.58	0.82	211.53	262	300	39	50	50	-1
	5	152	0.59	0.83	212.70	270	300	42	47	47	-1
2	7.5	152	0.59	0.83	213.89	270	304	41	47	47	-1
	10	164	0.59	0.83	215.07	270	304	40	48	47	-1
3	12.5	154	0.58	0.81	216.27	270	307	40	48	47	-2
	15	154	0.57	0.80	217.47	270	312	40	49	47	-2
4	17.5	154	0.58	0.82	218.65	270	312	40	49	47	-2
	20	154	0.58	0.82	219.84	270	313	40	49	47	-3
5	22.5	154	0.58	0.82	221.01	270	313	40	49	47	-3
	25	154	0.58	0.82	222.21	271	311	40	49	47	-3
6	27.5	154	0.58	0.82	223.39	270	307	40	50	47	-3
	30	154	0.58	0.82	224.58	271	312	41	50	47	-4
1	32.5	152	0.58	0.82	225.75	270	307	41	50	47	-4
	35	154	0.58	0.82	226.93	270	311	41	50	47	-4
2	37.5	154	0.58	0.82	228.12	270	311	42	50	47	-5
	40	154	0.59	0.83	229.32	270	311	42	51	47	-5
3	42.5	164	0.59	0.83	230.51	271	310	44	51	48	-5
	45	154	0.58	0.82	231.72	270	307	44	52	48	-5
4	47.5	154	0.58	0.82	232.87	270	312	45	52	48	-6
	50	151	0.59	0.84	234.10	270	309	46	52	48	-6
5	52.5	153	0.59	0.84	235.29	270	311	46	53	49	-6
	55	153	0.59	0.84	236.51	271	311	46	53	49	-6
6	57.5	153	0.59	0.84	237.73	270	306	47	54	49	-7
	60	153	0.59	0.84	238.93	270	310	47	54	50	-7

SOURCE TESTING FIELD DATA SHEET

Job No.: 121413456
Client: Northern Pulp
Plant: Pictou, NS
Location: Recovery Boiler
Test: PM-1
Date: Nov 10/15
Operators: TBK / JB
Gamma: 1.021
Delta H@: 1.728
Pitot Coeff.: 0.794
Start: 9:00
Finish: 11:00

Static Pressure (in.H2O): 1.10
Port Length (in): 6"
Stack Dia. (in.): 138"
Probe Length (ft): 2'
Nozzle ID (in.): 1-8 (0.234)
Console S/N: 11646

Pre-Test Leak Check: ✓
Vacuum Pressure: -18
Post-Test Leak Check: ✓
Vacuum Pressure: -18

K': 1.70

Traverse Point	Time (min)	Stack Gas Temp., Ts (F)	Velocity Head, dP (in.H2O)	Orifice dH (in.H2O)	Gas Meter Volume (cu.ft)	Probe Temp. (F)	Oven Temp. (F)	Impinger Outlet Temp. (F)	Gas Meter Temp. (F)		Pump Vacuum (in.Hg)
									In	Out	
	0				238.93						
1	2.5	153	0.58	0.82	240.52	269	314	44	51	50	-8
	5	154	0.61	0.86	241.79	269	308	44	53	50	-8
2	7.5	155	0.60	0.85	243.07	270	310	44	53	50	-8
	10	154	0.59	0.84	244.35	270	311	44	54	50	-8
3	12.5	154	0.60	0.85	245.55	270	308	44	54	51	-9
	15	154	0.59	0.83	246.79	270	312	44	54	51	-9
4	17.5	154	0.59	0.83	248.02	270	309	44	55	51	-9
	20	154	0.58	0.82	249.26	270	310	44	55	51	-9
5	22.5	155	0.61	0.86	250.51	270	308	45	55	51	-9
	25	154	0.59	0.84	251.76	270	309	45	55	51	-9
6	27.5	155	0.59	0.84	253.00	270	311	45	55	51	-10
	30	154	0.59	0.84	254.24	270	308	45	55	51	-10
1	32.5	154	0.58	0.82	255.47	269	310	45	55	51	-10
	35	153	0.61	0.86	256.74	270	306	45	55	51	-10
2	37.5	154	0.60	0.85	258.00 *	270	311	50	55	52	-10
	40	152	0.61	0.87	259.26	270	309	50	55	52	-10
3	42.5	154	0.59	0.84	260.55 *	270	310	50	55	52	-10
	45	155	0.58	0.83	261.75	270	311	50	55	52	-10
4	47.5	155	0.60	0.85	263.00 *	270	306	54	55	52	-10
	50	155	0.60	0.85	264.25	270	311	56	55	52	-10
5	52.5	154	0.59	0.84	265.50	270	309	56	55	52	-10
	55	153	0.59	0.84	266.75	270	311	58	54	52	-10
6	57.5	154	0.60	0.85	268.99	270	310	58	54	52	-10
	60	153	0.60	0.85	269.25	270	310	58	54	52	-12

COMBUSTION GAS ANALYSIS CONCENTRATION FIELD SHEET

Sampling Methodology: Environment Canada EPS 1/RM/15

Stantec

Project No.: 121413456
Client: Northern Pulp
Plant: Pictou NS
Location: Recovery Boiler

Fuel Type: biomass

Time Start: 10:00
Time Finish: 10:36

Test No.: PM-1
Date: Mar 10, 2015

Personnel: TBH

Time	Concentrations							
	O_2 (%)	CO_2 (%)	CO (ppm)	SO_2 (ppm)	NO_X (ppm)	NO (ppm)	NO_2 (ppm)	THC (%)
0	4.9	15.5	2581	8	17			
5	4.9	15.5	2943	9	19			
10	5.1	15.4	1346	8	21			
15	4.9	15.6	1281	9	23			
20	4.8	15.7	1263	8	25			
25	4.5	15.9	1453	7	32			
30	4.5	15.9	1539	8	29			

MOISTURE FIELD DATA SHEET

Project No.: 121413456
Client: Northern Pulp
Plant: Recovery Boiler
Location: Pictou, NS
Test: PM - 2
Date: March 10, 2015
Analyst: JJB/TRH/JAH

Stantec

Moisture Data

Impinger No.	Impinger Contents	Final Weight (g)	Tare Weight (g)	Weight of Moisture (g)
1	100 mL H2O	987.2	725.7	261.5
2	100 mL H2O	974.2	723.1	251.1
3	Blank	581.2	571.6	9.6
4	200g Silica Gel	1032.6	1013.2	19.4
		Total Weight Gain (g)		541.6
		Moisture Volume (mL)		541.6

Volume H_2O Collected: 541.6 ml
X 0.048 = 25.99 ft^3 H_2O (Vwc)

DGM Final 331.08 ft^3
DGM Initial 269.42 ft^3
Final - Initial = 61.66 ft^3 (Vmc)

Moisture = $\frac{Vwc}{(Vwc + Vmc)}$

Moisture = 0.296

Moisture = 0.30

SOURCE TESTING FIELD DATA SHEET

Job No.: 12141345G
Client: Northern Pulp
Plant: Pictou, NS
Location: Recovery Boiler
Test: PM-2
Date: March 10 2015
Operators: JBH/JB
Gamma: 1.021
Delta H@: 1.728
Pitot Coeff.: 0.794
Start: 12:15
Finish:

Static Pressure (in.H2O): 1.10
Port Length (in): 6"
Stack Dia. (in.): 138"
Probe Length (ft): 21
Nozzle ID (in.): 1-8 (0.234)
Console S/N: 1646

Pre-Test Leak Check: -18
Vacuum Pressure:
Post-Test Leak Check:
Vacuum Pressure:

K': 1.70

Traverse Point	Time (min)	Stack Gas Temp., Ts (F)	Velocity Head, dP (in.H2O)	Orifice dH (in.H2O)	Gas Meter Volume (cu.ft)	Probe Temp. (F)	Oven Temp. (F)	Impinger Outlet Temp. (F)	Gas Meter Temp. (F) In	Gas Meter Temp. (F) Out	Pump Vacuum (in.Hg)
	0				269.42						
1	2.5	151	0.64	0.91	270.68	268	292	48	53	53	-1
	5	152	0.64	0.91	271.96	269	293	49	55	53	-1
2	7.5	154	0.64	0.91	273.24	271	301	45	55	53	-1
	10	154	0.66	0.94	274.51	270	300	42	56	53	-1
3	12.5	154	0.66	0.94	275.80	271	302	41	57	54	-1
	15	155	0.65	0.93	277.10	269	302	40	58	54	-1
4	17.5	155	0.65	0.93	278.34	270	307	39	58	54	-2
	20	155	0.65	0.93	279.63	270	311	39	59	55	-2
5	22.5	155	0.65	0.93	280.88	271	311	38	59	55	-2
	25	156	0.65	0.93	282.15	270	316	38	60	55	-3
6	27.5	157	0.66	0.94	283.44	270	305	38	60	56	-3
	30	157	0.66	0.94	284.70	270	311	38	61	56	-3
1	32.5	155	0.66	0.95	285.98	270	314	38	60	57	-3
	35	154	0.66	0.95	287.25	270	310	39	60	57	-4
2	37.5	155	0.66	0.95	288.53	270	308	39	61	57	-4
	40	156	0.66	0.95	289.82	270	314	39	61	57	-4
3	42.5	155	0.67	0.96	291.12	271	309	39	61	57	-5
	45	155	0.66	0.95	292.40	269	314	39	62	58	-5
4	47.5	155	0.67	0.96	293.69	270	306	39	62	58	-5
	50	155	0.67	0.96	295.00	270	309	40	61	58	-5
5	52.5	155	0.67	0.96	296.29	270	304	40	61	58	-6
	55	156	0.65	0.93	297.60	271	309	40	62	58	-6
6	57.5	157	0.66	0.95	298.87	271	305	41	62	58	-6
	60	155	0.66	0.95	300.16	269	309	42	61	58	-7

SOURCE TESTING FIELD DATA SHEET

Job No.: 121413456
Client: Northern Pulp
Plant: Pictou, NS
Location: Recovery Boiler
Test: PM-2
Date: Mar 10, 2015
Operators: TBH / JB
Gamma: 1.021
Delta H@: 1.728
Pitot Coeff.: 0.794
Start :
Finish :

Static Pressure (in.H2O): 1.10
Port Length (in): 4"
Stack Dia. (in.): 138"
Probe Length (ft): 2'
Nozzle ID (in.): 1-8 (0.234)
Console S/N: 1646

Pre-Test Leak Check:
Vacuum Pressure:
Post-Test Leak Check:
Vacuum Pressure:

K': 1.70

Traverse Point	Time (min)	Stack Gas Temp., Ts (F)	Velocity Head, dP (in.H2O)	Orifice dH (in.H2O)	Gas Meter Volume (cu.ft)	Probe Temp. (F)	Oven Temp. (F)	Impinger Outlet Temp. (F)	Gas Meter Temp. (F)		Pump Vacuum (in.Hg)
									In	Out	
	0				300.16						
1	2.5	156	0.66	0.95	301.47	271	312	41	61	58	-7
	5	155	0.66	0.95	302.75	269	309	42	61	59	-7
2	7.5	153	0.65	0.94	304.04	270	310	43	61	58	-7
	10	155	0.66	0.95	305.32	270	311	44	60	59	-8
3	12.5	155	0.66	0.95	306.62	271	313	44	59	58	-8
	15	155	0.66	0.95	307.89	269	302	45	59	58	-8
4	17.5	154	0.66	0.95	309.18	270	312	45	58	58	-8
	20	154	0.66	0.95	310.48	270	311	45	58	57	-9
5	22.5	151	0.66	0.95	311.76	270	306	45	58	57	-9
	25	152	0.66	0.95	313.04	270	309	46	57	57	-9
6	27.5	153	0.66	0.95	314.33	270	311	47	56	56	-10
	30	153	0.67	0.96	315.63	270	310	47	56	56	-10
1	32.5	152	0.66	0.95	316.92	271	303	47	56	56	-11
	35	152	0.66	0.95	318.22	269	308	48	55	55	-11
2	37.5	152	0.65	0.95	319.50	270	306	48	55	55	-11
	40	151	0.66	0.94	320.77	270	307	49	54	54	-11
3	42.5	153	0.66	0.94	322.05	270	310	50	54	54	-12
	45	152	0.65	0.93	323.34	271	312	50	54	54	-12
4	47.5	153	0.66	0.94	324.61	269	303	51	53	53	-12
	50	153	0.66	0.94	325.90	270	311	52	54	53	-13
5	52.5	153	0.66	0.94	327.22	270	307	52	54	53	-13
	55	153	0.66	0.94	328.51	270	312	53	54	53	-13
6	57.5	154	0.66	0.94	329.80	270	310	53	54	53	-14
	60	151	0.66	0.94	331.08	270	305	54	54	53	-14

COMBUSTION GAS ANALYSIS CONCENTRATION FIELD SHEET

Sampling Methodology: Environment Canada EPS 1/RM/15

Stantec

Project No.: 121413456
Client: Northern Pulp
Plant: Pictou, NS
Location: Recovery Boiler

Fuel Type: biomass

Time Start: 1:00
Time Finish: 1:30

Test No.: Gas #2
Date: Mar 10/15

Personnel: TBH

Time	Concentrations							
	O_2 (%)	CO_2 (%)	CO (ppm)	SO_2 (ppm)	NO_X (ppm)	NO (ppm)	NO_2 (ppm)	THC (%)
0	4.5	15.9	2465	8	42			
5	4.5	15.8	2647	7	34			
10	4.4	16.0	2660	7	36			
15	4.4	16.0	3058	6	49			
20	4.5	16.0	2873	6	42			
25	4.6	15.9	2973	5	59			
30	4.6	15.8	3025	4	61			

MOISTURE FIELD DATA SHEET

Stantec

Project No.: 121413456
Client: Northern Pulp
Plant: Recovery Boiler
Location: Pictou NS
Test: PM-3
Date: March 11, 2015
Analyst: JJB/JBH/JAH

Moisture Data

Impinger No.	Impinger Contents	Final Weight (g)	Tare Weight (g)	Weight of Moisture (g)
1	100 mL H2O	995.8	730.8	265
2	100 mL H2O	957.9	718.3	239.6
3	Blank	582.6	570.7	11.9
4	200g Silica Gel	973.8	949.7	24.1
		Total Weight Gain (g)		540.6
		Moisture Volume (mL)		540.6

Volume H_2O Collected: 540.6 ml
X 0.048 = 25.95 ft^3 H_2O (Vwc)

DGM Final 392.317 ft^3
DGM Initial 334.37 ft^3
Final - Initial = 57.94 ft^3 (Vmc)

Moisture = $\frac{Vwc}{(Vwc + Vmc)}$

Moisture = 0.309

Moisture = 0.31

1/2

SOURCE TESTING FIELD DATA SHEET

Job No.: 121413456
Client: Northern Pulp
Plant: Recovery Boiler
Location: Pictou NS
Test: PM-5
Date: April 11, 2015
Operators: JJB/JH
Gamma: 1.021
Delta H@: 1.728
Pitot Coeff.: 0.794
Start: 9:20
Finish:

Static Pressure (in.H2O): 1.10
Port Length (in): 6"
Stack Dia. (in.): 138"
Probe Length (ft): 21
Nozzle ID (in.): 1-8 (0.234)
Console S/N: 1646

Pre-Test Leak Check: ✓
Vacuum Pressure: -13
Post-Test Leak Check: ✓
Vacuum Pressure: -13

K': 1.70

Traverse Point	Time (min)	Stack Gas Temp., Ts (F)	Velocity Head, dP (in.H2O)	Orifice dH (in.H2O)	Gas Meter Volume (cu.ft)	Probe Temp. (F)	Oven Temp. (F)	Impinger Outlet Temp. (F)	Gas Meter Temp. (F) In	Gas Meter Temp. (F) Out	Pump Vacuum (in.Hg)
	0				334.37						
1	2.5	150	0.56	0.79	335.61	268	310	48	43	43	-1
	5	149	0.57	0.80	336.81	266	311	48	44	43	-1
2	7.5	150	0.59	0.83	337.99	270	309	48	44	43	-1
	10	150	0.59	0.83	339.25	270	309	46	44	43	-1
3	12.5	151	0.58	0.81	340.40	270	313	46	44	43	-1
	15	152	0.58	0.81	341.62	270	309	45	45	43	-2
4	17.5	151	0.58	0.81	342.84	270	310	45	46	44	-2
	20	150	0.57	0.80	344.01	270	311	45	46	44	-2
5	22.5	150	0.58	0.82	345.24	270	303	45	47	44	-3
	25	151	0.58	0.82	346.47	270	310	45	47	44	-3
6	27.5	151	0.57	0.80	347.65	270	313	45	47	44	-3
	30	151	0.57	0.80	348.86	270	308	45	47	44	-2
1	32.5	151	0.58	0.82	350.07	266	307	45	47	44	-3
	35	150	0.59	0.83	351.21	270	309	40	46	45	-3
2	37.5	150	0.56	0.79	352.40	270	310	48	47	45	-4
	40	151	0.58	0.82	353.65	270	312	49	47	45	-4
3	42.5	151	0.58	0.82	354.93	270	310	49	47	45	-4
	45	151	0.58	0.82	356.07	270	309	49	47	45	-4
4	47.5	148	0.59	0.84	357.27	270	308	51	48	45	-4
	50	151	0.57	0.80	358.49	270	310	51	48	45	-4
5	52.5	149	0.58	0.82	359.69	270	307	52	48	46	-4
	55	151	0.57	0.80	360.86	270	313	52	48	46	-4
6	57.5	149	0.58	0.82	362.04	270	312	52	50	46	-5
	60	149	0.57	0.81	363.17	270	308	52	50	46	-5

2/2

SOURCE TESTING FIELD DATA SHEET

Job No.: 121413456
Client: Northern Pulp
Plant: Recovery Boiler
Location: Pictou, NS
Test: PM-3
Date: Dec 11, 2015
Operators: JJB/JH
Gamma: 1.021
Delta H@: 1.728
Pitot Coeff.: 0.794
Start: 9:20
Finish:

Static Pressure (In.H2O):
Port Length (In):
Stack Dia. (In.):
Probe Length (ft):
Nozzle ID (In.):
Console S/N:

Pre-Test Leak Check:
Vacuum Pressure:
Post-Test Leak Check:
Vacuum Pressure:

K': 1.70

Traverse Point	Time (min)	Stack Gas Temp., Ts (F)	Velocity Head, dP (In.H2O)	Orifice dH (In.H2O)	Gas Meter Volume (cu.ft)	Probe Temp. (F)	Oven Temp. (F)	Impinger Outlet Temp. (F)	Gas Meter Temp. (F)		Pump Vacuum (In.Hg)
									In	Out	
	0				363.17						
1	2.5	150	0.58	0.82	364.38	270	311	55	50	46	-5
	5	150	0.57	0.81	365.57	270	309	55	50	46	-5
2	7.5	150	0.58	0.82	366.76	270	311	57	51	47	-6
	10	150	0.58	0.82	367.98	270	312	59	51	47	-6
3	12.5	150	0.58	0.82	369.16	270	307	60	51	47	-6
	15	148	0.58	0.83	370.26	270	311	60	51	47	-6
4	17.5	150	0.57	0.81	371.56	270	309	61	51	47	-7
	20	150	0.59	0.84	372.77	270	309	62	51	47	-7
5	22.5	150	0.59	0.84	374.00	270	315	62	51	47	-8
	25	150	0.58	0.82	375.21	270	309	62	51	47	-8
6	27.5	151	0.58	0.82	376.39	270	308	68	51	48	-8
	30	150	0.57	0.81	377.62	270	307	70	51	48	-9
1	32.5	149	0.58	0.82	378.82	269	308	70	51	48	-9
	35	150	0.58	0.82	380.02	270	312	72	52	48	-9
2	37.5	150	0.59	0.84	381.23	271	306	67	52	48	-9
	40	149	0.59	0.84	382.44	270	312	63	53	49	-10
3	42.5	149	0.59	0.84	383.67	270	308	60	53	49	-10
	45	~~148~~ 148	0.60	0.86	384.90	270	305	58	53	49	-10
4	47.5	148	0.60	0.86	386.14	270	307	55	53	49	-11
	50	149	0.60	0.86	387.38	270	310	54	54	50	-11
5	52.5	148	0.60	0.86	388.63	270	308	53	54	50	-11
	55	149	0.59	0.84	389.86	270	311	53	54	50	-12
6	57.5	150	0.60	0.86	391.08	270	310	53	54	51	-13
	60	149	0.60	0.86	392.31	270	309	54	54	52	-13

COMBUSTION GAS ANALYSIS CONCENTRATION FIELD SHEET

Sampling Methodology: Environment Canada EPS 1/RM/15

Stantec

Project No.: 121413456
Client: Northern Pulp
Plant: Pictou, NS
Location: Recovery Boiler

Fuel Type: biomass

Time Start: 10:20
Time Finish: 10:50

Test No.: Gas #3
Date: Mar. 11, 2015

Personnel: TBH

Time	Concentrations							
	O_2 (%)	CO_2 (%)	CO (ppm)	SO_2 (ppm)	NO_X (ppm)	NO (ppm)	NO_2 (ppm)	THC (%)
0	4.5	15.9	3018	25	47			
5	4.7	15.9	3129	36	49			
10	4.0	16.4	3099	44	51			
15	4.2	16.1	2938	30	52			
20	4.6	15.9	3214	20	54			
25	4.5	16.0	3009	17	56			
30	4.2	16.3	3171	23	56			

Appendix D

Calculations

Stantec

Raw Data for:
Test #1

Client: Northern Pulp
Job Number: 121413456

Plant: Power Boiler
Location: Pictou, NS
Test: PM-2
Date: 10-Mar-15
Personnel: TBH / JJB/JAH

Test Start: 8:47 AM
Test Finish: 10:47 AM

Particulate Collected from Filter (mg):	198.6
Particulate Collected from Probe Wash (mg):	20.9
Particulate Collected from Impinger Wash (mg):	4.8
Total Particulate Collected (mg):	219.5

Impinger No.	Impinger Contents	Final Weight (g)	Tare Weight (g)	Weight of Moisture (g)
1	100 mL H2O	994.3	731.4	262.9
2	100 mL H2O	651.2	628.0	23.2
3	Blank	659.5	659.5	0.0
4	200g Silica Gel	998.4	994.0	4.4
			Total Weight Gain (g)	290.5
			Moisture Volume (mL)	290.5

Parameters

Barometric Pressure, Pbar (in. Hg)	29.55
Stack Static Pressure, Pstatic (in. H2O)	0.20
Ambient Temp, (°F)	28
H2O Volume Collected, Vw (mL)	290.5
Total # Sampling Points,	24
Sampling Time per Point, (min)	5
Readings Taken Every __ mins	2.5
Regulatory Agency	NSENV

O2, (%)	10.8
CO2, (%)	9.8
N2, (%)	79.4
CO(ppm)	1733.9
NOx (ppm)	16.1
SO2 (ppm)	0.0

Stack Diameter, (in.)	76
Stack Area, (sq. ft.)	31.50
Probe Length, (ft.)	8
Nozzle Diameter, (in.)	0.172
Pitot Coefficient, (Cp)	0.816
Gamma, meter constant	1.053
Port length (in.)	6

	Traverse Point	Time (min)	Stack Gas Temp, Ts (°F)	S-type Pitot delta P (in. H2O)	Orifice delta H (in. H2O)	Gas Meter Volume (cu. ft.)	Gas Meter Temp Inlet (°F)	Gas Meter Temp Outlet (°F)
						52.280		
Traverse 1	1	2.5	141	1.60	0.89	53.520	40	40
		5	144	1.50	0.83	54.730	40	40
	2	7.5	145	1.80	1.00	55.980	39	40
		10	145	1.80	1.00	57.280	40	40
	3	12.5	148	1.70	0.94	58.540	40	40
		15	148	1.60	0.88	59.780	40	40
	4	17.5	147	1.50	0.83	60.960	41	40
		20	142	1.50	0.84	62.170	41	40
	5	22.5	146	1.00	0.55	63.260	41	40
		25	148	1.00	0.55	64.210	42	40
	6	27.5	149	1.00	0.55	65.140	42	40
		30	151	0.60	0.33	65.910	42	40
	7	32.5	151	0.50	0.27	66.650	42	40
		35	151	0.50	0.27	67.330	42	40
	8	37.5	150	0.45	0.25	68.020	42	40
		40	149	0.45	0.25	68.680	42	41
	9	42.5	151	0.45	0.25	69.350	42	41
		45	152	0.45	0.25	70.010	42	41
	10	47.5	152	0.45	0.25	70.670	42	41
		50	151	0.45	0.25	71.320	43	41
	11	52.5	150	0.50	0.28	72.010	43	41
		55	151	0.50	0.28	72.730	43	42
	12	57.5	149	0.50	0.28	73.450	43	42
		60	149	0.50	0.28	74.180	44	42
						74.180		
Traverse 2	1	62.5	149	1.50	0.77	75.950	43	43
		65	149	1.45	0.74	77.210	43	43
	2	67.5	152	1.30	0.66	78.250	45	43
		70	153	1.20	0.61	79.260	45	43
	3	72.5	150	0.90	0.46	80.210	45	43
		75	153	0.90	0.46	81.080	45	43
	4	77.5	152	0.65	0.33	81.930	46	43
		80	149	0.65	0.33	82.680	46	43
	5	82.5	150	0.50	0.26	83.310	46	43
		85	153	0.50	0.25	83.940	46	43
	6	87.5	154	0.90	0.46	84.740	46	44
		90	151	0.95	0.49	85.630	46	44
	7	92.5	150	1.30	0.67	86.590	47	44
		95	147	1.40	0.72	87.690	47	44
	8	97.5	150	1.80	0.93	88.840	48	45
		100	147	1.80	0.93	90.090	48	45
	9	102.5	148	1.80	0.93	91.330	48	45
		105	150	1.80	0.93	92.560	49	46
	10	107.5	150	1.80	0.93	93.800	49	46
		110	145	1.80	0.93	95.050	49	46
	11	112.5	142	1.80	0.93	96.310	49	46
		115	142	1.80	0.94	97.550	49	46
	12	117.5	142	1.80	0.94	98.800	49	46
		120	141	1.80	0.94	100.050	49	46

Calculations for: 0
Test #1

Client: Northern Pulp
Job Number: 121413456

Plant: Power Boiler
Location: Pictou, NS
Test: PM-2
Date: 10-Mar-15
Personnel: TBH / JJB/JAH

Calculated Parameters

Stack Gas Pressure, Ps (in.Hg)	29.56
Stack Gas Molecular Weight, Dry Basis, Md (lb/lb-mole)	30.00
Volume of Water Vapour Collected, Vwc (cu.ft)	13.944
Stack Gas Moisture Content (% as decimal)	0.208
Stack Gas Molecular Weight, Wet Basis, Ms (lb/lb-mole)	27.50

Isokineticity Checks

Check range	Outside of Criteria
Check average	Within Criteria

	Traverse Point	Time (min)	Stack Gas Temp, Ts (R)	S-type Pitot, delta P (in. H2O)	Orifice delta H (in. H2O)	Stack Gas Velocity, Us (ft/s)	Meter Press., Pm (in. Hg)	Gas Meter Avg. Temp, Tm (R)	Gas Meter Volume, Vm (cu. ft.)	Vol. @ Ref., Vmc (cu. ft.)	Isokinetics I (%)
Traverse 1	1	2.5	601	1.60	0.89	75.72	29.62	500	1.240	1.388	108.33
		5	604	1.50	0.83	73.50	29.61	500	1.210	1.354	109.43
	2	7.5	605	1.60	1.00	80.58	29.62	500	1.250	1.401	103.43
		10	605	1.60	1.00	80.58	29.62	500	1.300	1.456	107.46
	3	12.5	608	1.70	0.94	78.51	29.62	500	1.260	1.411	107.43
		15	608	1.60	0.88	76.16	29.61	500	1.240	1.388	108.96
	4	17.5	607	1.50	0.83	73.68	29.61	501	1.200	1.342	108.69
		20	602	1.50	0.84	73.38	29.61	501	1.190	1.331	107.34
	5	22.5	606	1.00	0.55	60.11	29.59	501	1.090	1.218	120.73
		25	608	1.00	0.55	60.21	29.59	501	0.950	1.060	105.29
	6	27.5	609	1.00	0.55	60.26	29.59	501	0.930	1.038	103.16
		30	611	0.60	0.33	46.76	29.57	501	0.770	0.859	110.39
	7	32.5	611	0.50	0.27	42.68	29.57	501	0.740	0.825	116.20
		35	611	0.50	0.27	42.68	29.57	501	0.680	0.759	106.77
	8	37.5	610	0.45	0.25	40.48	29.57	501	0.690	0.770	114.11
		40	609	0.45	0.25	40.42	29.57	502	0.660	0.735	108.95
	9	42.5	611	0.45	0.25	40.49	29.57	502	0.670	0.747	110.78
		45	612	0.45	0.25	40.52	29.57	502	0.660	0.735	109.21
	10	47.5	612	0.45	0.25	40.52	29.57	502	0.660	0.735	109.21
		50	611	0.45	0.25	40.49	29.57	502	0.650	0.724	107.36
	11	52.5	610	0.50	0.28	42.65	29.57	502	0.690	0.768	108.04
		55	611	0.50	0.28	42.68	29.57	503	0.720	0.801	112.72
	12	57.5	609	0.50	0.28	42.61	29.57	503	0.720	0.801	112.54
		60	609	0.50	0.28	42.61	29.57	503	0.730	0.811	113.98
Traverse 2	1	62.5	609	1.50	0.77	73.81	29.61	503	1.770	1.969	159.76
		65	609	1.45	0.74	72.56	29.60	503	1.260	1.402	115.66
	2	67.5	612	1.30	0.66	68.88	29.60	504	1.040	1.154	100.85
		70	613	1.20	0.61	66.23	29.59	504	1.010	1.121	102.01
	3	72.5	610	0.90	0.46	57.22	29.58	504	0.950	1.054	110.48
		75	613	0.90	0.46	57.36	29.58	504	0.870	0.965	101.43
	4	77.5	612	0.65	0.33	48.70	29.57	505	0.850	0.942	116.36
		80	609	0.65	0.33	48.58	29.57	505	0.750	0.831	102.42
	5	82.5	610	0.50	0.26	42.65	29.57	505	0.630	0.698	98.15
		85	613	0.50	0.25	42.75	29.57	505	0.630	0.698	98.39
	6	87.5	614	0.90	0.46	57.40	29.58	505	0.800	0.886	93.16
		90	611	0.95	0.49	58.83	29.59	505	0.890	0.985	100.64
	7	92.5	610	1.30	0.67	68.77	29.60	506	0.960	1.062	92.67
		95	607	1.40	0.72	71.19	29.60	506	1.100	1.217	102.08
	8	97.5	610	1.60	0.93	80.92	29.62	507	1.150	1.271	94.21
		100	607	1.60	0.93	80.72	29.62	507	1.250	1.381	102.16
	9	102.5	608	1.60	0.93	80.78	29.62	507	1.240	1.370	101.42
		105	610	1.60	0.93	80.92	29.62	508	1.230	1.357	100.57
	10	107.5	610	1.60	0.93	80.92	29.62	508	1.240	1.368	101.39
		110	605	1.60	0.93	80.58	29.62	508	1.250	1.379	101.79
	11	112.5	602	1.60	0.93	80.38	29.62	508	1.260	1.390	102.35
		115	602	1.60	0.94	80.38	29.62	508	1.240	1.368	100.72
	12	117.5	602	1.60	0.94	80.38	29.62	508	1.250	1.379	101.54
		120	601	1.60	0.94	80.32	29.62	508	1.250	1.379	101.45
		Total	Average	Average	Average	Average	Average	Average	Total	Total	Average
		120	609	1.13	0.60	62.07	29.59	503	47.770	53.081	106.92

Combustion Gas Data for: Northern Pulp

Client: Northern Pulp
Job Number: 121413456

Plant: Power Boiler
Location: Pictou, NS
Test: PM-2
Date: 10-Mar-15
Personnel: TBH / JJB/JAH

Test Start:
Test Finish:

Time (min)	O2 (%)	CO2 (%)	CO (ppm)	SO2 (ppm)	NOx (ppm)
0	10.6	10.0	2552	0	15
5	10.6	10.0	1498	0	16
10	11.0	9.5	1360	0	17
15	11.3	9.2	1445	0	17
20	11.6	8.9	1901	0	15
25	10.4	10.3	1870	0	16
30	9.9	10.6	1511	0	17
Average:	**10.8**	**9.8**	**1734**	**0**	**16**

Raw Data for: 0

Test #2

Client: Northern Pulp
Job Number: 121413456

Plant: Power Boiler
Location: Pictou, NS
Test: PM-3
Date: 11-Mar-15
Personnel: TBH / JJB/JAH

Test Start: 12:00 PM
Test Finish: 2:00 PM

Particulate Collected from Filter (mg):	211.4
Particulate Collected from Probe Wash (mg):	27.8
Particulate Collected from Impinger Wash (mg):	3.0
Total Particulate Collected (mg):	239.2

Impinger No.	Impinger Contents	Final Weight (g)	Tare Weight (g)	Weight of Moisture (g)
1	100 mL H2O	945.6	715.5	230.1
2	100 mL H2O	643.0	625.6	17.4
3	Blank	653.0	650.7	2.3
4	200g Silica Gel	1004.4	994.3	10.1
			Total Weight Gain (g)	259.9
			Moisture Volume (mL)	259.9

Parameters

Barometric Pressure, Pbar (in. Hg)	29.38	O2, (%)	11.4	Stack Diameter, (in.)	76
Stack Static Pressure, Pstatic (in. H2O)	0.20	CO2, (%)	9.3	Stack Area, (sq. ft.)	31.50
Ambient Temp, (°F)	33	N2, (%)	79.4	Probe Length, (ft.)	8
H2O Volume Collected, Vw (mL)	259.9	CO(ppm)	2079.0	Nozzle Diameter, (in.)	0.172
Total # Sampling Points,	24	NOx (ppm)	21.0	Pitot Coefficient, (Cp)	0.816
Sampling Time per Point, (min)	5	SO2 (ppm)	0.0	Gamma, meter constant	1.053
Readings Taken Every __ mins	2.5			Port length (in.)	6
Regulatory Agency	NSENV				

	Traverse Point	Time (min)	Stack Gas Temp, Ts (°F)	S-type Pitot delta P (in. H2O)	Orifice delta H (in. H2O)	Gas Meter Volume (cu. ft.)	Gas Meter Temp Inlet (°F)	Gas Meter Temp Outlet (°F)
						100.510		
Traverse 1	1	2.5	151	0.93	0.48	101.450	48	48
		5	152	0.99	0.51	102.420	50	49
	2	7.5	152	0.98	0.50	103.350	50	49
		10	150	0.80	0.41	104.200	50	49
	3	12.5	150	0.50	0.25	104.910	52	50
		15	148	0.52	0.27	105.590	53	50
	4	17.5	149	0.47	0.24	106.250	52	51
		20	150	0.47	0.24	106.910	52	51
	5	22.5	150	0.44	0.23	107.550	52	52
		25	148	0.40	0.21	108.170	52	52
	6	27.5	151	0.70	0.37	108.970	52	52
		30	151	0.70	0.37	109.770	51	52
	7	32.5	151	1.05	0.54	110.760	52	52
		35	152	1.10	0.57	111.800	52	52
	8	37.5	152	1.40	0.73	112.850	52	52
		40	148	1.40	0.73	113.980	53	51
	9	42.5	149	1.70	0.89	115.140	53	52
		45	144	1.60	0.84	116.360	53	52
	10	47.5	142	1.70	0.90	117.570	53	52
		50	142	1.70	0.90	118.810	53	52
	11	52.5	147	1.70	0.89	120.060	53	53
		55	147	1.70	0.89	121.310	53	52
	12	57.5	147	1.70	0.89	122.550	53	52
		60	144	1.70	0.89	123.880	54	52
						123.880		
Traverse 2	1	62.5	147	1.50	0.79	125.020	53	53
		65	148	1.50	0.78	126.170	53	53
	2	67.5	146	1.40	0.74	127.320	53	53
		70	149	1.40	0.73	128.440	54	53
	3	72.5	152	1.30	0.68	129.560	54	53
		75	149	1.30	0.68	130.670	54	53
	4	77.5	149	1.30	0.68	131.770	54	53
		80	149	1.20	0.63	132.850	54	53
	5	82.5	152	1.20	0.62	133.890	54	53
		85	149	1.20	0.63	134.910	53	53
	6	87.5	149	0.90	0.47	135.850	53	53
		90	147	0.90	0.47	136.800	54	53
	7	92.5	149	0.65	0.34	137.680	54	53
		95	151	0.65	0.34	138.530	53	53
	8	97.5	151	0.45	0.24	139.280	53	53
		100	152	0.45	0.23	139.930	53	53
	9	102.5	152	0.30	0.16	140.560	53	53
		105	151	0.30	0.16	141.160	53	53
	10	107.5	151	0.20	0.10	141.700	53	53
		110	150	0.20	0.10	142.200	53	53
	11	112.5	150	0.20	0.10	142.700	53	53
		115	150	0.20	0.10	143.190	53	53
	12	117.5	150	0.20	0.10	143.680	53	53
		120	148	0.20	0.10	144.180	53	53

Calculations for: 0
Test #2

Client: Northern Pulp
Job Number: 121413456

Plant: Power Boiler
Location: Pictou, NS
Test: PM-3
Date: 11-Mar-15
Personnel: TBH / JJB/JAH

Calculated Parameters

Stack Gas Pressure, Ps (in.Hg)	29.39
Stack Gas Molecular Weight, Dry Basis, Md (lb/lb-mole)	29.94
Volume of Water Vapour Collected, Vwc (cu.ft)	12.475
Stack Gas Moisture Content (% as decimal)	0.208
Stack Gas Molecular Weight, Wet Basis, Ms (lb/lb-mole)	27.45

Isokineticity Checks

Check range	Outside of Criteria
Check average	Within Criteria

	Traverse Point	Time (min)	Stack Gas Temp, Ts (R)	S-type Pitot, delta P (in. H2O)	Orifice delta H (in. H2O)	Stack Gas Velocity, Us (ft/s)	Meter Press., Pm (in. Hg)	Gas Meter Avg. Temp, Tm (R)	Gas Meter Volume, Vm (cu. ft.)	Vol. @ Ref., Vmc (cu. ft.)	Isokinetics I (%)
Traverse 1	1	2.5	611	0.93	0.48	58.43	29.42	508	0.940	1.029	106.43
		5	612	0.99	0.51	60.34	29.42	510	0.970	1.058	108.23
	2	7.5	612	0.98	0.50	60.03	29.42	510	0.930	1.015	102.36
		10	610	0.80	0.41	54.15	29.41	510	0.850	0.927	103.35
	3	12.5	610	0.50	0.25	42.81	29.40	511	0.710	0.772	108.84
		15	608	0.52	0.27	43.59	29.40	512	0.680	0.739	101.95
	4	17.5	609	0.47	0.24	41.47	29.40	512	0.660	0.717	104.16
		20	610	0.47	0.24	41.51	29.40	512	0.660	0.717	104.25
	5	22.5	610	0.44	0.23	40.16	29.40	512	0.640	0.694	104.37
		25	608	0.40	0.21	38.23	29.40	512	0.620	0.673	105.87
	6	27.5	611	0.70	0.37	50.70	29.41	512	0.800	0.868	103.56
		30	611	0.70	0.37	50.70	29.41	512	0.800	0.869	103.66
	7	32.5	611	1.05	0.54	62.09	29.42	512	0.990	1.075	104.68
		35	612	1.10	0.57	63.60	29.42	512	1.040	1.129	107.54
	8	37.5	612	1.40	0.73	71.75	29.43	512	1.050	1.141	96.28
		40	608	1.40	0.73	71.52	29.43	512	1.130	1.228	103.27
	9	42.5	609	1.70	0.89	78.87	29.45	513	1.160	1.260	96.23
		45	604	1.60	0.84	76.20	29.44	513	1.220	1.325	103.88
	10	47.5	602	1.70	0.90	78.42	29.45	513	1.210	1.314	99.80
		50	602	1.70	0.90	78.42	29.45	513	1.240	1.346	102.27
	11	52.5	607	1.70	0.89	78.74	29.45	513	1.250	1.356	103.42
		55	607	1.70	0.89	78.74	29.45	513	1.250	1.357	103.52
	12	57.5	607	1.70	0.89	78.74	29.45	513	1.240	1.346	102.70
		60	604	1.70	0.89	78.55	29.45	513	1.330	1.443	109.77
Traverse 2	1	62.5	607	1.50	0.79	73.97	29.44	513	1.140	1.236	100.39
		65	608	1.50	0.78	74.03	29.44	513	1.150	1.247	101.35
	2	67.5	606	1.40	0.74	71.40	29.43	513	1.150	1.247	104.72
		70	609	1.40	0.73	71.58	29.43	514	1.120	1.213	102.14
	3	72.5	612	1.30	0.68	69.14	29.43	514	1.120	1.213	106.25
		75	609	1.30	0.68	68.97	29.43	514	1.110	1.202	105.04
	4	77.5	609	1.30	0.68	68.97	29.43	514	1.100	1.191	104.09
		80	609	1.20	0.63	66.27	29.43	514	1.080	1.170	106.36
	5	82.5	612	1.20	0.62	66.43	29.43	514	1.040	1.128	102.67
		85	609	1.20	0.63	66.27	29.43	513	1.020	1.106	100.55
	6	87.5	609	0.90	0.47	57.39	29.41	513	0.940	1.019	106.95
		90	607	0.90	0.47	57.29	29.41	514	0.950	1.028	107.81
	7	92.5	609	0.65	0.34	48.77	29.41	514	0.880	0.952	117.87
		95	611	0.65	0.34	48.85	29.41	513	0.850	0.921	113.95
	8	97.5	611	0.45	0.24	40.65	29.40	513	0.750	0.812	120.81
		100	612	0.45	0.23	40.68	29.40	513	0.650	0.704	104.79
	9	102.5	612	0.30	0.16	33.22	29.39	513	0.630	0.682	124.37
		105	611	0.30	0.16	33.19	29.39	513	0.600	0.650	118.35
	10	107.5	611	0.20	0.10	27.10	29.39	513	0.540	0.585	130.43
		110	610	0.20	0.10	27.08	29.39	513	0.500	0.541	120.67
	11	112.5	610	0.20	0.10	27.08	29.39	513	0.500	0.541	120.67
		115	610	0.20	0.10	27.08	29.39	513	0.490	0.530	118.26
	12	117.5	610	0.20	0.10	27.08	29.39	513	0.490	0.530	118.26
		120	608	0.20	0.10	27.03	29.39	513	0.500	0.541	120.47
		Total 120	Average 608	Average 0.95	Average 0.49	Average 56.19	Average 29.42	Average 512	Total 43.670	Total 47.369	Average 107.61

Combustion Gas Data for: Northern Pulp

Client: Northern Pulp
Job Number: 121413456

Plant: Power Boiler
Location: Pictou, NS
Test: PM-3
Date: 11-Mar-15
Personnel: TBH / JJB/JAH

Test Start: 12:15 PM
Test Finish: 12:45 PM

Time (min)	O2 (%)	CO2 (%)	CO (ppm)	SO2 (ppm)	NOx (ppm)
0	12.1	8.6	3163	0	16
5	11.5	9.1	2865	0	21
10	11.1	9.5	2296	0	22
15	11.6	9.1	1540	0	24
20	12.1	8.5	1760	0	23
25	10.9	9.6	1129	0	16
30	10.2	10.4	1800	0	25
Average:	**11.4**	**9.3**	**2079**	**0**	**21**

Raw Data for: 0
Test #3

Client: Northern Pulp
Job Number: 121413456

Plant: Power Boiler
Location: Pictou, NS
Test: PM-I
Date: 11-Mar-15
Personnel: TBH/JJB/JAH

Test Start: 2:52 PM
Test Finish: 4:52 PM

Particulate Collected from Filter (mg):	184.3
Particulate Collected from Probe Wash (mg):	45.0
Particulate Collected from Impinger Wash (mg):	4.2
Total Particulate Collected (mg):	229.3

Impinger No.	Impinger Contents	Final Weight (g)	Tare Weight (g)	Weight of Moisture (g)
1	100 mL H2O	964.7	715.5	249.2
2	100 mL H2O	757.9	735.2	22.7
3	Blank	573.0	570.6	2.4
4	200g Silica Gel	941.7	931.3	10.4
			Total Weight Gain (g)	284.7
			Moisture Volume (mL)	284.7

Parameters

Barometric Pressure, Pbar (in. Hg)	29.35	O2, (%)	9.7	Stack Diameter, (in.)	76
Stack Static Pressure, Pstatic (in. H2O)	0.20	CO2, (%)	11.0	Stack Area, (sq. ft.)	31.50
Ambient Temp, (°F)	36	N2, (%)	79.3	Probe Length, (ft.)	8
H2O Volume Collected, Vw (mL)	284.70	CO(ppm)	1936.1	Nozzle Diameter, (in.)	0.172
Total # Sampling Points,	24	NOx (ppm)	26.3	Pitot Coefficient, (Cp)	0.816
Sampling Time per Point, (min)	5	SO2 (ppm)	0.0	Gamma, meter constant	1.053
Readings Taken Every __ mins	2.5			Port length (in.)	6
Regulatory Agency	NSENV				

	Traverse Point	Time (min)	Stack Gas Temp, Ts (°F)	S-type Pitot delta P (in. H2O)	Orifice delta H (in. H2O)	Gas Meter Volume (cu. ft.)	Gas Meter Temp Inlet (°F)	Gas Meter Temp Outlet (°F)
						144.830		
Traverse 1	1	2.5	142	1.50	0.79	146.050	50	50
		5	142	1.50	0.79	147.230	51	51
	2	7.5	145	1.60	0.84	148.450	52	51
		10	145	1.60	0.84	149.680	53	51
	3	12.5	150	1.50	0.78	150.870	54	51
		15	147	1.50	0.79	152.050	55	52
	4	17.5	148	1.50	0.79	153.220	56	52
		20	151	1.40	0.73	154.390	57	53
	5	22.5	152	1.40	0.73	155.530	58	53
		25	149	1.40	0.73	156.720	59	54
	6	27.5	149	0.90	0.47	157.670	59	55
		30	151	0.90	0.47	158.640	60	55
	7	32.5	151	0.60	0.31	159.420	59	56
		35	150	0.60	0.31	160.210	59	56
	8	37.5	150	0.55	0.29	160.970	58	56
		40	155	0.55	0.29	161.720	58	56
	9	42.5	153	0.55	0.29	162.470	58	57
		45	149	0.55	0.29	163.230	58	57
	10	47.5	151	0.60	0.31	163.980	58	57
		50	154	0.60	0.31	164.760	58	57
	11	52.5	154	0.70	0.37	165.540	58	57
		55	153	0.70	0.37	166.380	57	57
	12	57.5	152	0.85	0.45	167.320	58	57
		60	152	0.75	0.39	168.200	59	57
						168.200		
Traverse 2	1	62.5	134	1.00	0.54	169.200	58	57
		65	151	1.00	0.52	170.180	59	58
	2	67.5	155	1.00	0.52	171.180	59	57
		70	153	1.00	0.52	172.170	59	58
	3	72.5	154	1.00	0.52	173.180	60	58
		75	151	0.60	0.31	173.960	60	58
	4	77.5	150	0.55	0.29	174.710	60	58
		80	147	0.45	0.24	175.380	60	59
	5	82.5	144	0.40	0.21	176.000	60	59
		85	144	0.35	0.19	176.560	60	59
	6	87.5	145	0.95	0.51	177.390	60	59
		90	142	1.00	0.53	178.270	60	59
	7	92.5	145	1.50	0.80	179.310	60	59
		95	147	1.50	0.80	180.520	60	59
	8	97.5	145	1.80	0.96	181.700	60	59
		100	142	1.80	0.96	182.960	60	59
	9	102.5	139	1.90	1.02	184.270	60	59
		105	140	1.90	1.02	185.620	59	59
	10	107.5	143	1.90	1.02	186.930	59	59
		110	137	1.90	1.02	188.270	59	58
	11	112.5	137	1.80	0.97	189.580	59	58
		115	140	1.80	0.97	190.880	60	58
	12	117.5	138	1.80	0.97	192.180	60	58
		120	135	1.80	0.97	193.490	60	58

Calculations for: 0
Test #3

Client: Northern Pulp
Job Number: 121413456

Plant: Power Boiler
Location: Pictou, NS
Test: PM-4
Date: 11-Mar-15
Personnel: TBH/JJB/JAH

Calculated Parameters

Stack Gas Pressure, Ps (in.Hg)	29.36
Stack Gas Molecular Weight, Dry Basis, Md (lb/lb-mole)	30.15
Volume of Water Vapour Collected, Vwc (cu.ft)	13.666
Stack Gas Moisture Content (% as decimal)	0.207
Stack Gas Molecular Weight, Wet Basis, Ms (lb/lb-mole)	27.63

Isokineticity Checks

Check range	Within Criteria
Check average	Within Criteria

	Traverse Point	Time (min)	Stack Gas Temp, Ts (R)	S-type Pitot, delta P (in. H2O)	Orifice delta H (in. H2O)	Stack Gas Velocity, Us (ft/s)	Meter Press., Pm (in. Hg)	Gas Meter Avg. Temp, Tm (R)	Gas Meter Volume, Vm (cu. ft.)	Vol. @ Ref., Vmc (cu. ft.)	Isokinetics I (%)
Traverse 1	1	2.5	602	1.50	0.79	73.46	29.41	510	1.220	1.330	107.76
		5	602	1.50	0.79	73.46	29.41	511	1.180	1.283	104.03
	2	7.5	605	1.60	0.84	76.05	29.41	512	1.220	1.326	104.31
		10	605	1.60	0.84	76.05	29.41	512	1.230	1.335	105.06
	3	12.5	610	1.50	0.78	73.94	29.41	513	1.190	1.290	105.29
		15	607	1.50	0.79	73.76	29.41	514	1.180	1.277	103.95
	4	17.5	608	1.50	0.79	73.82	29.41	514	1.170	1.265	103.05
		20	611	1.40	0.73	71.49	29.40	515	1.170	1.262	106.71
	5	22.5	612	1.40	0.73	71.55	29.40	516	1.140	1.229	103.96
		25	609	1.40	0.73	71.38	29.40	517	1.190	1.280	108.04
	6	27.5	609	0.90	0.47	57.23	29.38	517	0.950	1.020	107.40
		30	611	0.90	0.47	57.32	29.38	518	0.970	1.041	109.74
	7	32.5	611	0.60	0.31	46.60	29.37	518	0.780	0.837	108.03
		35	610	0.60	0.31	46.77	29.37	518	0.790	0.847	109.32
	8	37.5	610	0.55	0.29	44.77	29.37	517	0.760	0.816	109.95
		40	615	0.55	0.29	44.96	29.37	517	0.750	0.805	108.95
	9	42.5	613	0.55	0.29	44.88	29.37	518	0.750	0.804	108.67
		45	609	0.55	0.29	44.74	29.37	518	0.760	0.815	109.75
	10	47.5	611	0.60	0.31	46.80	29.37	518	0.750	0.805	103.87
		50	614	0.60	0.31	46.92	29.37	518	0.780	0.837	108.29
	11	52.5	614	0.70	0.37	50.68	29.38	518	0.780	0.837	100.28
		55	613	0.70	0.37	50.64	29.38	517	0.840	0.902	108.01
	12	57.5	612	0.85	0.45	55.75	29.38	518	0.940	1.009	109.51
		60	612	0.75	0.39	52.37	29.38	518	0.880	0.943	109.02
Traverse 2	1	62.5	594	1.00	0.54	59.58	29.35	518	1.000	1.072	105.70
		65	611	1.00	0.52	60.42	29.39	519	0.980	1.050	104.99
	2	67.5	615	1.00	0.52	60.62	29.39	518	1.000	1.072	107.58
		70	613	1.00	0.52	60.52	29.39	519	0.990	1.060	106.23
	3	72.5	614	1.00	0.52	60.57	29.39	519	1.010	1.081	108.36
		75	611	0.60	0.31	46.80	29.39	519	0.780	0.835	107.77
	4	77.5	610	0.55	0.29	44.77	29.37	519	0.750	0.802	108.09
		80	607	0.45	0.24	40.40	29.37	520	0.670	0.718	106.38
	5	82.5	604	0.40	0.21	38.00	29.37	520	0.620	0.662	104.14
		85	604	0.35	0.19	35.54	29.37	520	0.560	0.598	100.55
	6	87.5	605	0.95	0.51	58.60	29.38	520	0.830	0.887	90.53
		90	602	1.00	0.53	59.98	29.39	520	0.880	0.941	93.40
	7	92.5	605	1.50	0.80	73.64	29.39	520	1.040	1.112	90.35
		95	607	1.50	0.80	73.76	29.41	520	1.210	1.295	105.36
	8	97.5	605	1.80	0.96	80.67	29.41	520	1.180	1.262	93.64
		100	602	1.80	0.96	80.47	29.42	520	1.260	1.349	99.79
	9	102.5	599	1.90	1.02	82.47	29.42	520	1.310	1.402	100.73
		105	600	1.90	1.02	82.53	29.43	519	1.350	1.447	104.00
	10	107.5	603	1.90	1.02	82.74	29.43	519	1.310	1.404	101.17
		110	597	1.90	1.02	82.33	29.43	519	1.340	1.437	103.07
	11	112.5	597	1.80	0.97	80.13	29.43	519	1.310	1.405	103.53
		115	600	1.80	0.97	80.33	29.42	519	1.300	1.393	102.86
	12	117.5	598	1.80	0.97	80.20	29.42	519	1.300	1.393	102.71
		120	595	1.80	0.97	80.00	29.42	519	1.310	1.403	103.24
		Total	Average	Average	Average	Average	Average	Average	Total	Total	Average
		120	607	1.15	0.61	62.72	29.39	517	48.660	52.274	104.52

Combustion Gas Data for: Northern Pulp

Client: Northern Pulp
Job Number: 121413456

Plant: Power Boiler
Location: Pictou, NS
Test: PM-4
Date: 11-Mar-15
Personnel: TBH/JJB/JAH

Test Start: 4:00 PM
Test Finish: 4:30 PM

Time (min)	O2 (%)	CO2 (%)	CO (ppm)	SO2 (ppm)	NOx (ppm)
0	10.3	10.1	1249	0	17
5	10.0	10.7	2928	0	16
10	10.4	11.4	1370	0	24
15	9.0	11.7	2984	0	27
20	9.0	11.6	1749	0	33
25	9.4	11.0	1627	0	34
30	9.8	10.5	1646	0	33
Average:	**9.7**	**11.0**	**1936**	**0**	**26**

DATA ENTRY

Northern Pulp
Pictou, NS
Fuel: Fuel oil
Operating Conditions:
Emission Control Equipment:
Stack Height from Grade: m
Stack Diameter: m

Reference Temperature, Tref (F):	77
(K):	298
Reference Pressure, Pref (in.Hg):	29.92
(Bar):	1.0

Parameter	Symbol	Units	Test 1	Test 2	Test 3	Average
Test ID	-	-	PM-2	PM-3	PM-4	-
Date	-	-	10-Mar-15	11-Mar-15	11-Mar-15	n/a
Start Time	-	-	8:47 AM	12:00 PM	2:52 PM	n/a
End Time	-	-	10:47 AM	2:00 PM	4:52 PM	n/a
Total Sampling Time	-	min	120	120	120	120
Stack Diameter	D	in.	76	76	76	76
Average Stack Gas Temperature	Ts	F	149	149	147	148
Average Dry Gas Meter Temperature	Tm	F	43	52	57	51
Barometric Pressure	Pbar	in.Hg	29.55	29.38	29.35	29.43
Stack Static Pressure	Pstatic	in.H2O	0.20	0.20	0.20	0.20
Average Pressure Drop (Head)	dP	in.H2O	1.13	0.95	1.15	1.08
Average deltaH Orifice	dH	in.H2O	0.60	0.49	0.61	0.57
Average Meter Temperature	Tm	F	43	52	57	51
Gas Sample Volume	Vm	cu.ft	47.77	43.67	48.66	46.70
Average Isokinetics	I	%	107	108	105	106
Nozzle Diameter	Dn	in.	0.172	0.172	0.172	0.172
Pitot Coefficient	Cp	-	0.816	0.816	0.816	0.816
Gamma, meter constant	y	-	1.053	1.053	1.053	1.053
Reference Temperature	Tref	R	537	537	537	537
Reference Pressure	Pref	in.Hg	29.92	29.92	29.92	29.92
Stack Gas Oxygen Content	Co2	%	10.8	11.4	9.7	10.6
Stack Gas Carbon Dioxide Content	Cco2	%	9.8	9.3	11.0	10.0
Stack Gas Nitrogen Content	Cn2	%	79.4	79.4	79.3	79.4
Stack Gas Sulphur Dioxide Content	Cso2	ppm	0.0	0.0	0.0	0.0
Stack Gas Nitrogen Oxides Content	Cnox	ppm	16.1	21.0	26.3	21.1
Stack Gas Carbon Monoxide Content	Cco	ppm	1733.9	2079.0	1936.1	1916.3
Volume of Water Collected	Vw	mL	291	260	285	278
Particulate Collected from Filter	-	mg	198.6	211.4	184.3	198.1
Particulate Collected from Probe Wash	-	mg	20.9	27.8	45.0	31.3
Particulate Collected from Impinger Wash	-	mg	4.8	3.0	4.2	4.0
Total Particulate Collected (excluding impingers)	Mp	mg	220	239	229	229

Legend:
F - degrees Fahrenheit
K - degrees Kelvin
Bar - bars
in.Hg - inches of mercury
in. - inches
in.H2O - inches of water
cu.ft - cubic feet
R - degrees Rankin
NOx - as NO2

CALCULATIONS

Northern Pulp
Pictou, NS
Fuel: Fuel oil
Operating Conditions:
Emission Control Equipment:
Stack Height from Grade: m
Stack Diameter: m

Variable	Symbol	Units	Calculation	Test 1	Test 2	Test 3	Average
Stack Area	As	sq.ft sq.m	As = Pi x ((D/12)^2)/ 4 As (sq.m) = As (sq.ft) x 0.0929	31.50 2.93	31.50 2.93	31.50 2.93	31.50 2.93
Barometric Pressure Stack Static Pressure Avg. Stack Temperature Avg. Meter Temperature Nozzle Diameter	Pbar Pstatic Ts Tm Dn	kPa kPa R R mm	Pbar (kPa) = Pbar (in.Hg) x 3.386 Pstatic (kPa) = Pstatic (in.H2O) x 0.249 Ts (R) = Ts (F) + 460 Tm (R) = Tm (F) + 460 Dn (mm) = Dn (in.) x 25.4	100.1 0.05 609 503 4	99.5 0.05 609 512 4	99.4 0.05 607 517 4	99.6 0.05 608 511.0 4.4
Gas Meter Pressure Sample Volume at Ref Cond Volume of Water Vapour Water Fraction	Pm Vmc Vwc Bwo	in.Hg cu.ft cu.m cu.ft -	Pm = Pbar + (dH / 13.6) Vmc = Tref/Pref x (Vm x Pm x y) / Tm Vmc (cu.m) = 0.02832 x Vmc (cu.ft) Vwc = 0.0480 x Vw Bwo = Vwc / (Vwc + Vmc)	29.59 53.09 1.50 13.94 0.208	29.42 47.38 1.34 12.48 0.208	29.39 52.25 1.48 13.67 0.207	29.47 50.9 1.44 13.36 0.2
Molecular Weight, Dry Molecular Weight, Wet	Md Ms	lb/lb-mol lb/lb-mol	Md = 0.44 (Cco2) + 0.32 (Co2) + 0.28 (Cn2) Ms = Md (1 - Bwo) + (18 x Bwo)	30.00 27.50	29.94 27.45	30.15 27.63	30.0 27.5
Stack Pressure Stack Gas Velocity Actual Stack Gas Flow Rate Dry Stack Gas Flow Rate	Ps Us Q Qs	in.Hg ft/s m/s acfm Rcfm Rcms	Ps = Pbar + (Pstatic / 13.6) Us = 85.33 x Cp x ((dP x Ts)/(Ps x Ms))^0.5 Us (m/s) = 0.3048 x Us (ft/s) Q = 60 x Us x As Qs = Q x (1-Bwo) x (Tref/Ts) x (Ps/Pref) Qs (Rcms) = 0.000472 x Qs (Rcfm)	29.56 62.07 18.92 117,330 81,028 38.25	29.39 56.19 17.13 106,216 72,822 34.37	29.36 62.72 19.12 118,558 81,607 38.52	29.44 60.3 18.4 114,035 78,486 37.0
Sulphur Dioxide - SO2 SO2 Measured Concentration Uncorrected @ Ref Cond SO2 Emission Rate SO2 Concentration Corrected to 11% O2 Corrected to 3% O2 Corrected to 12% CO2	 Cso2 Cso2 ERso2 Cso2 Cso2 Cso2	 ppm mg/Rcm g/s kg/hr mg/Rcm mg/Rcm mg/Rcm	 Measurement from Flue Gas Analyzer Cso2 (mg/Rcm) = Cso2 (ppm) x 2.62 ERso2 = Cso2/1000 x Qs ERso2 (kg/hr) = 3.6 x ERso2 (g/s) Cso2 (11% O2) = Cso2 (mg/Rcm) x (20.9-11) / (20.9-Co2) Cso2 (3% O2) = Cso2 (mg/Rcm) x (20.9-3) / (20.9-Co2) Cso2 (12% CO2) = Cso2 (mg/Rcm) x (12/Cco2)	 0.00 0.00 0.00 0.00 0.00 0.00 0.00	 0.00 0.00 0.00 0.00 0.00 0.00 0.00	 0.00 0.00 0.00 0.00 0.00 0.00 0.00	 0.00 0.00 0.00 0.00 0.00 0.00 0.00
Nitrogen Oxides - NOx NOx Measured Concentration Uncorrected @ Ref Cond NOx Emission Rate NOx Concentration Corrected to 11% O2 Corrected to 3% O2 Corrected to 12% CO2	 Cnox Cnox ERnox Cnox Cnox Cnox	 ppm mg/Rcm g/s kg/hr mg/Rcm mg/Rcm mg/Rcm	 Measurement from Flue Gas Analyzer Cnox (mg/Rcm) = Cnox (ppm) x 1.882 ERnox = Cnox/1000 x Qs ERnox (kg/hr) = 3.6 x ERnox (g/s) Cnox (11% O2) = Cnox (mg/Rcm) x (20.9-11) / (20.9-Co2) Cnox (3% O2) = Cnox (mg/Rcm) x (20.9-3) / (20.9-Co2) Cnox (12% CO2) = Cnox (mg/Rcm) x (12/Cco2)	 16.14 30.38 1.16 4.18 29.70 53.69 37.26	 21.00 39.52 1.36 4.89 41.00 74.13 51.23	 26.29 49.47 1.91 6.86 43.73 79.06 53.97	 21.14 39.79 1.48 5.31 38.14 68.96 47.48
Carbon Monoxide - CO CO Measured Concentration Uncorrected @ Ref Cond CO Emission Rate CO Concentration Corrected to 11% O2 Corrected to 3% O2 Corrected to 12% CO2	 Cco Cco ERco Cco Cco Cco	 ppm mg/Rcm g/s kg/hr mg/Rcm mg/Rcm mg/Rcm	 Measurement from Flue Gas Analyzer Cco (mg/Rcm) = Cco (ppm) x 1.145 ERco = Cco/1000 x Qs ERco (kg/hr) = 3.6 x ERco (g/s) Cco (11% O2) = Cco (mg/Rcm) x (20.9-11) / (20.9-Co2) Cco (3% O2) = Cco (mg/Rcm) x (20.9-3) / (20.9-Co2) Cco (12% CO2) = Cco (mg/Rcm) x (12/Cco2)	 1733.86 1985.27 75.93 273.34 1940.46 3508.52 2434.49	 2079.00 2380.46 81.82 294.56 2469.54 4465.13 3085.78	 1936.14 2216.88 85.39 307.41 1959.57 3543.05 2418.42	 1916.33 2194.20 81.05 291.77 2123.19 3838.90 2646.23
Particulate Concentration Particulate Emission Rate Particulate Concentration Corrected to 11% O2 Corrected to 3% O2 Corrected to 12% CO2	Cs ERp Cs Cs Cs	mg/Rcm g/s kg/hr mg/Rcm mg/Rcm mg/Rcm	Cs = Mp / Vmc ERp = Cs/1000 x Qs ERp (kg/hr) = 3.6 x ERp (g/s) Cs (11% O2) = Cs x (20.9-11) / (20.9-Co2) Cs (3% O2) = Cs x (20.9-3) / (20.9-Co2) Cs (12% CO2) = Cs x (12/Cco2)	146.01 5.58 20.10 142.72 258.04 179.05	178.29 6.13 22.06 184.96 334.42 231.11	154.92 5.97 21.48 136.94 247.59 169.00	159.74 5.89 21.22 154.87 280.02 193.05

Legend:
sq ft - square feet
sq m - square metres
Pi - 3.142
R - degrees Rankin
ppm - parts per million
in Hg - inches of mercury
cu ft - cubic feet
cu m - cubic metres
Ref Cond - reference temperature and pressure (25 C and 101.3 kPa)
Rcms - dry reference cubic metres per second
Rcfm - dry reference cubic feet per minute
mg/Rcm - milligrams per dry reference cubic metre
g/s - grams per second
NOx - as NO2
acfm - actual cubic feet per minute

OFFICIAL STACK TESTING RESULTS
Northern Pulp
Pictou, NS

Fuel: Fuel oil
Operating Conditions:
Emission Control Equipment:
Stack Height from Grade: m
Stack Diameter: m

Parameter	Test 1	Test 2	Test 3	Average	NSENV Limits
Test ID	PM-2	PM-3	PM-4	-	-
Test Date	10-Mar-15	11-Mar-15	11-Mar-15	-	-
Stack Gas Temperature (C)	64.7	65.1	63.9	64.6	-
Moisture Content (%)	20.8	20.8	20.7	20.8	-
Velocity (m/s)	18.9	17.1	19.1	18.4	-
Volumetric Flow (Rcms)	38.2	34.4	38.5	37.0	-
Oxygen - O2 (%)	10.8	11.4	9.7	10.6	-
Carbon Dioxide - CO2 (%)	9.79	9.26	11.0	10.0	-
Sulphur Dioxide - SO2					
SO2 Measured Concentration (ppm)	0.0	0.0	0.0	0.0	-
SO2 Concentration at 11% O2 (mg/Rcm)	0.0	0.0	0.0	0.0	-
Emission Rate (kg/hr)	0.00	0.00	0.00	0.00	-
Nitrogen Oxides - NOx					
NOx Measured Concentration (ppm)	16.1	21.0	26.3	21.1	-
NOx Concentration at 11% O2 (mg/Rcm)	29.7	41.0	43.7	38.1	-
Emission Rate (kg/hr)	4.18	4.89	6.86	5.31	-
Carbon Monoxide - CO					
CO Measured Concentration (ppm)	1734	2079	1936	1916	-
CO Concentration at 11% O2 (mg/Rcm)	1940	2470	1960	2123	-
Emission Rate (kg/hr)	273.3	294.6	307.4	291.8	-
Particulate Matter - PM					
Particulate Concentration at 11% O2 (mg/Rcm)	143	185	137	155	-
Particulate Emission Rate (kg/hr)	20.1	22.1	21.5	21.2	-

Legend:
C - degrees Celsius
m/s - metres per second
Rcms - dry reference cubic metres per second
ppm - parts per million
Ref Cond - reference temperature and pressure (25 C and 101.3 kPa)
mg/Rcm - miligrams per dry reference cubic metre
NOx - as NO2
ND - non-detectable

Particulate Recoveries: Impinger Catch, Probe Wash, Filter Catch

Client: Northern Pulp
Facility: Power Boiler
Location: Pictou, NS
Job Number: 121413456

IMPINGER CATCH

Container ID	Beaker Pre Weights (g) Date Analysed by Trial 1	Trial 2	Trial 3	Average	Sample ID	Recoveries Jar + Sample + Rinse (g)	Jar Tare (g)	Sample Collected (g)	Rinse Water (g)	Total Rinse Water (g)	Beaker Post Weights (g) Date Analysed by Trial 1	Trial 2	Trial 3	Average	Uncorrected Particulate Weight (g)	Corrected Particulate Weight (g)
I6	107 9280	107 9278		107 9279	PM-2	889 0	455 9	290 5	11 0	153 6	107 9334	107 9330		107 9332	0 0053	0 0048
P5	112 4398	112 4397		112 4398	PM-3	834 3	455 7	259 9	8 9	127 6	112 4432	112 4432		112 4432	0 0035	0 0030
G2	107 7205	107 7203		107 7204	PM-4	831 2	456 0	284 7	6 3	96 8	107 7251	107 7248		107 7250	0 0046	0 0042
																Conc. (g/mL)
H3	109 2005	109 2006		109 2006	WB	608 6	455 1	153 5		153 5	109 2010	109 2011		109 2011	0 0005	0 000003

PROBE WASH

Container ID	Beaker Pre Weights (g) Date Analysed by Trial 1	Trial 2	Trial 3	Average	Sample ID	Recoveries Jar + Acetone (g)	Jar Tare (g)	Recovered Acetone (g)	Rinse Acetone	Total Acetone (g)	Beaker Post Weights (g) Date Analysed by Trial 1	Trial 2	Trial 3	Average	Uncorrected Particulate Weight (g)	Corrected Particulate Weight (g)
K6	112 1840	112 1840		112 1840	PM-2	439 9	324 5	115 4	7 2	122 6	112 2063	112 2064		112 2064	0 0224	0 0209
A6	110 6382	110 6378		110 6380	PM-3	422 1	324 0	98 1	9 6	107 7	110 6671	110 6671		110 6671	0 0291	0 0278
N1	112 7048	112 7051		112 7050	PM-4	395 9	324 5	71 4	22 5	93 9	112 7511	112 7510		112 7511	0 0461	0 0450
																Conc. (g/mL)
X4	112 2894	112 2894		112 2894	AB	393 2	324 9	68 3		68 3	112 2904	112 29		112 2902	0 0008	0 000009

Density of Acetone 0.7850 g/ml

FILTER CATCH

Filter ID	Pre Weights (g) Analysed by Trial 1	Trial 2	Trial 3	Average	Sample ID	Post Weights (g) Date: Analysed by Trial 1	Trial 2	Trial 3	Average	Particulate Weight from Filter (g)
0226-21	0 3509	0 3505		0 3507	PM-2	0 5495	0 5491		0 5493	0 1986
0226-20	0 3477	0 3474		0 3476	PM-3	0 5589	0 5590		0 5590	0 2114
0226-15	0 3422	0 3421		0 3422	PM-4	0 5266	0 5262		0 5264	0 1843

Raw Data for:
Test #1

Client: Northern Pulp
Job Number: 121413456

Plant: Recovery Boiler
Location: Pictou, NS
Test: PM-1
Date: 10-Mar-15
Personnel: TBH / JJB/JAH

Test Start: 9:00 AM
Test Finish: 11:00 AM

Particulate Collected from Filter (mg):	1743.4
Particulate Collected from Probe Wash (mg):	730.8
Particulate Collected from Impinger Wash (mg):	1.9
Total Particulate Collected (mg):	2474.2

Impinger No.	Impinger Contents	Final Weight (g)	Tare Weight (g)	Weight of Moisture (g)
1	100 mL H2O	973.5	726.0	247.5
2	100 mL H2O	974.0	729.6	244.4
3	Blank	596.6	570.9	25.7
4	200g Silica Gel	1013.1	990.6	22.5
			Total Weight Gain (g)	540.1
			Moisture Volume (mL)	540.1

Parameters

Barometric Pressure, Pbar (in. Hg)	30.13	O2, (%)	4.8	Stack Diameter, (in.)	138
Stack Static Pressure, Pstatic (in. H2O)	1.10	CO2, (%)	15.6	Stack Area, (sq. ft.)	103.87
Ambient Temp, (°F)	10	N2, (%)	79.6	Probe Length, (ft.)	2
H2O Volume Collected, Vw (mL)	540.1	CO(ppm)	1772.3	Nozzle Diameter, (in.)	0.234
Total # Sampling Points,	24	NOx (ppm)	23.7	Pitot Coefficient, (Cp)	0.794
Sampling Time per Point, (min)	5	SO2 (ppm)	8.1	Gamma, meter constant	1.021
Readings Taken Every __ mins	2.5			Port length (in.)	6
Regulatory Agency					

	Traverse Point	Time (min)	Stack Gas Temp, Ts (°F)	S-type Pitot delta P (in. H2O)	Orifice delta H (in. H2O)	Gas Meter Volume (cu. ft.)	Gas Meter Temp Inlet (°F)	Gas Meter Temp Outlet (°F)
						210.340		
Traverse 1	1	2.5	152	0.58	0.82	211.530	50	50
		5	152	0.59	0.83	212.700	47	47
	2	7.5	152	0.59	0.83	213.890	47	47
		10	154	0.59	0.83	215.070	48	47
	3	12.5	154	0.58	0.81	216.270	48	47
		15	154	0.57	0.80	217.470	49	47
	4	17.5	154	0.58	0.82	218.630	49	47
		20	154	0.58	0.82	219.840	49	47
	5	22.5	154	0.58	0.82	221.010	49	47
		25	154	0.58	0.82	222.210	49	47
	6	27.5	154	0.58	0.82	223.390	50	47
		30	154	0.58	0.82	224.580	50	47
	1	32.5	152	0.58	0.82	225.750	50	47
		35	154	0.58	0.82	226.930	50	47
	2	37.5	154	0.58	0.82	228.120	50	47
		40	154	0.59	0.83	229.320	51	47
	3	42.5	154	0.59	0.83	230.510	51	48
		45	154	0.58	0.82	231.720	52	48
	4	47.5	154	0.58	0.82	232.890	52	48
		50	151	0.59	0.84	234.100	52	48
	5	52.5	153	0.59	0.84	235.290	53	49
		55	153	0.59	0.84	236.510	53	49
	6	57.5	153	0.59	0.84	237.730	54	49
		60	153	0.59	0.84	239.020	54	50
						239.020		
Traverse 2	1	62.5	153	0.58	0.82	240.450	51	50
		65	154	0.61	0.86	241.790	53	50
	2	67.5	155	0.60	0.85	243.070	53	50
		70	154	0.59	0.84	244.350	54	50
	3	72.5	154	0.60	0.85	245.550	54	51
		75	154	0.59	0.83	246.790	54	51
	4	77.5	154	0.59	0.83	248.020	55	51
		80	154	0.58	0.82	249.260	55	51
	5	82.5	155	0.61	0.86	250.510	55	51
		85	154	0.59	0.84	251.760	55	51
	6	87.5	155	0.59	0.84	253.000	55	51
		90	154	0.59	0.84	254.240	55	51
	1	92.5	154	0.58	0.82	255.470	55	51
		95	153	0.61	0.86	256.740	55	51
	2	97.5	154	0.60	0.85	258.000	55	52
		100	152	0.61	0.87	259.260	55	52
	3	102.5	154	0.59	0.84	260.550	55	52
		105	155	0.58	0.83	261.750	55	52
	4	107.5	155	0.60	0.85	263.000	55	52
		110	155	0.60	0.85	264.250	55	52
	5	112.5	154	0.59	0.84	265.500	55	52
		115	153	0.59	0.84	266.750	54	52
	6	117.5	154	0.60	0.85	267.990	54	52
		120	153	0.60	0.85	269.250	54	52

Calculations for: 0
Test #1

Client: Northern Pulp
Job Number: 121413456

Plant: Recovery Boiler
Location: Pictou, NS
Test: PM-1
Date: 10-Mar-15
Personnel: TBH / JJB/JAH

Calculated Parameters

Stack Gas Pressure, Ps (in.Hg)	30.21
Stack Gas Molecular Weight, Dry Basis, Md (lb/lb-mole)	30.59
Volume of Water Vapour Collected, Vwc (cu.ft)	25.925
Stack Gas Moisture Content (% as decimal)	0.289
Stack Gas Molecular Weight, Wet Basis, Ms (lb/lb-mole)	27.03

Isokineticity Checks

Check range	Within Criteria
Check average	Within Criteria

	Traverse Point	Time (min)	Stack Gas Temp, Ts (R)	S-type Pitot, delta P (in. H2O)	Orifice delta H (in. H2O)	Stack Gas Velocity, Us (ft/s)	Meter Press., Pm (in. Hg)	Gas Meter Avg. Temp, Tm (R)	Gas Meter Volume, Vm (cu. ft.)	Vol. @ Ref., Vmc (cu. ft.)	Isokinetics I (%)
Traverse 1	1	2.5	612	0.58	0.82	44.67	30.19	510	1.190	1.291	102.41
		5	612	0.59	0.83	45.06	30.19	507	1.170	1.277	100.43
	2	7.5	612	0.59	0.83	45.06	30.19	507	1.190	1.299	102.14
		10	614	0.59	0.83	45.13	30.19	508	1.180	1.286	101.35
	3	12.5	614	0.58	0.81	44.75	30.19	508	1.200	1.308	103.95
		15	614	0.57	0.80	44.36	30.19	508	1.200	1.307	104.75
	4	17.5	614	0.58	0.82	44.75	30.19	508	1.180	1.285	102.12
		20	614	0.58	0.82	44.75	30.19	508	1.190	1.296	102.98
	5	22.5	614	0.58	0.82	44.75	30.19	508	1.170	1.274	101.25
		25	614	0.58	0.82	44.75	30.19	508	1.200	1.307	103.85
	6	27.5	614	0.58	0.82	44.75	30.19	509	1.180	1.284	102.02
		30	614	0.58	0.82	44.75	30.19	509	1.190	1.295	102.88
	7	32.5	612	0.58	0.82	44.67	30.19	509	1.170	1.273	100.99
		35	614	0.58	0.82	44.75	30.19	509	1.180	1.284	102.02
	8	37.5	614	0.58	0.82	44.75	30.19	509	1.190	1.295	102.88
		40	614	0.59	0.83	45.13	30.19	509	1.200	1.304	102.77
	9	42.5	614	0.59	0.83	45.13	30.19	510	1.190	1.292	101.81
		45	614	0.58	0.82	44.75	30.19	510	1.210	1.313	104.30
	10	47.5	614	0.58	0.82	44.75	30.19	510	1.170	1.269	100.86
		50	611	0.59	0.84	45.02	30.19	510	1.210	1.313	103.17
	11	52.5	613	0.59	0.84	45.09	30.19	511	1.190	1.288	101.43
		55	613	0.59	0.84	45.09	30.19	511	1.220	1.321	103.99
	12	57.5	613	0.59	0.84	45.09	30.19	512	1.220	1.320	103.89
		60	613	0.59	0.84	45.09	30.19	512	1.290	1.394	109.74
Traverse 2	1	62.5	613	0.58	0.82	44.71	30.19	511	1.430	1.550	123.05
		65	614	0.61	0.86	45.89	30.19	512	1.340	1.449	112.31
	2	67.5	615	0.60	0.85	45.55	30.19	512	1.280	1.385	108.28
		70	614	0.59	0.84	45.13	30.19	512	1.280	1.383	108.98
	3	72.5	614	0.60	0.85	45.51	30.19	513	1.200	1.295	101.21
		75	614	0.59	0.83	45.13	30.19	513	1.240	1.339	105.47
	4	77.5	614	0.59	0.83	45.13	30.19	513	1.230	1.328	104.51
		80	614	0.58	0.82	44.75	30.19	513	1.240	1.337	106.28
	5	82.5	615	0.61	0.86	45.93	30.19	513	1.250	1.348	104.55
		85	614	0.59	0.84	45.13	30.19	513	1.250	1.348	106.22
	6	87.5	615	0.59	0.84	45.17	30.19	513	1.240	1.337	105.45
		90	614	0.59	0.84	45.13	30.19	513	1.240	1.337	105.37
	7	92.5	614	0.58	0.82	44.75	30.19	513	1.230	1.326	105.41
		95	613	0.61	0.86	45.85	30.19	513	1.270	1.370	106.05
	8	97.5	614	0.60	0.85	45.51	30.19	514	1.260	1.358	106.07
		100	612	0.61	0.87	45.61	30.19	514	1.260	1.358	105.03
	9	102.5	614	0.58	0.84	45.13	30.19	514	1.290	1.390	109.51
		105	615	0.58	0.83	44.78	30.19	514	1.200	1.293	102.82
	10	107.5	615	0.60	0.85	45.55	30.19	514	1.250	1.347	105.31
		110	615	0.60	0.85	45.55	30.19	514	1.250	1.347	105.31
	11	112.5	614	0.59	0.84	45.13	30.19	514	1.250	1.347	106.11
		115	613	0.59	0.84	45.09	30.19	513	1.250	1.348	106.13
	12	117.5	614	0.60	0.85	45.51	30.19	513	1.240	1.337	104.49
		120	613	0.60	0.85	45.47	30.19	513	1.260	1.359	106.08
		Total	Average	Average	Average	Average	Average	Average	Total	Total	Average
		120	614	0.59	0.83	45.08	30.19	511	58.910	63.787	104.75

Combustion Gas Data for: Northern Pulp

Client: Northern Pulp
Job Number: 121413456

Plant: Recovery Boiler
Location: Pictou, NS
Test: PM-1
Date: 10-Mar-15
Personnel: TBH / JJB/JAH

Test Start: 10:00 AM
Test Finish: 10:30 AM

Time (min)	O2 (%)	CO2 (%)	CO (ppm)	SO2 (ppm)	NOx (ppm)
0	4.9	15.5	2581	8	17
5	4.9	15.5	2943	9	19
10	5.1	15.4	1346	8	21
15	4.9	15.6	1281	9	23
20	4.8	15.7	1263	8	25
25	4.5	15.9	1453	7	32
30	4.5	15.9	1539	8	29
Average:	**4.8**	**15.6**	**1772**	**8**	**24**

Raw Data for: 0
Test #2

Client: Northern Pulp
Job Number: 121413456

Plant: Recovery Boiler
Location: Pictou, NS
Test: PM-2
Date: 10-Mar-15
Personnel: TBH / JJB/JAH

Test Start: 12:15 PM
Test Finish: 2:15 PM

Particulate Collected from Filter (mg):	1626.3
Particulate Collected from Probe Wash (mg):	1152.8
Particulate Collected from Impinger Wash (mg):	4.5
Total Particulate Collected (mg):	2779.0

Impinger No.	Impinger Contents	Final Weight (g)	Tare Weight (g)	Weight of Moisture (g)
1	100 mL H2O	987.2	725.7	261.5
2	100 mL H2O	974.2	723.1	251.1
3	Blank	581.2	571.6	9.6
4	200g Silica Gel	1032.6	1013.2	19.4
			Total Weight Gain (g)	541.6
			Moisture Volume (mL)	541.6

Parameters

Barometric Pressure, Pbar (in. Hg)	30.12	O2, (%)	4.5	Stack Diameter, (in.)	138
Stack Static Pressure, Pstatic (in. H2O)	1.10	CO2, (%)	15.9	Stack Area, (sq. ft.)	103.87
Ambient Temp, (°F)	31	N2, (%)	79.6	Probe Length, (ft.)	2
H2O Volume Collected, Vw (mL)	541.6	CO(ppm)	2817.3	Nozzle Diameter, (in.)	0.234
Total # Sampling Points,	24	NOx (ppm)	46.1	Pitot Coefficient, (Cp)	0.794
Sampling Time per Point, (min)	5	SO2 (ppm)	6.1	Gamma, meter constant	1.021
Readings Taken Every __ mins	2.5			Port length (in.)	6
Regulatory Agency					

	Traverse Point	Time (min)	Stack Gas Temp, Ts (°F)	S-type Pitot delta P (in. H2O)	Orifice delta H (in. H2O)	Gas Meter Volume (cu. ft.)	Gas Meter Temp Inlet (°F)	Gas Meter Temp Outlet (°F)
						269.420		
Traverse 1	1	2.5	151	0.64	0.91	270.680	53	53
		5	152	0.64	0.91	271.960	55	53
	2	7.5	154	0.64	0.91	273.240	55	53
		10	154	0.66	0.94	274.510	56	53
	3	12.5	154	0.66	0.94	275.800	57	54
		15	155	0.65	0.93	277.100	58	54
	4	17.5	155	0.65	0.93	278.340	58	54
		20	155	0.65	0.93	279.630	59	55
	5	22.5	155	0.65	0.93	280.880	59	55
		25	156	0.65	0.93	282.150	60	55
	6	27.5	157	0.66	0.94	283.440	60	56
		30	157	0.66	0.94	284.700	61	56
	1	32.5	155	0.66	0.95	285.980	60	57
		35	154	0.66	0.95	287.250	60	57
	2	37.5	155	0.66	0.95	288.530	61	57
		40	156	0.66	0.95	289.820	61	57
	3	42.5	155	0.67	0.96	291.120	61	57
		45	155	0.66	0.95	292.400	62	58
	4	47.5	155	0.67	0.96	293.690	62	58
		50	155	0.67	0.96	295.000	61	58
	5	52.5	155	0.67	0.96	296.290	61	58
		55	156	0.65	0.93	297.600	62	58
	6	57.5	157	0.66	0.95	298.870	62	58
		60	155	0.66	0.95	300.160	61	58
						300.160		
Traverse 2	1	62.5	156	0.66	0.95	301.470	61	58
		65	155	0.66	0.95	302.750	61	59
	2	67.5	153	0.65	0.94	304.040	61	58
		70	155	0.66	0.95	305.320	60	59
	3	72.5	155	0.66	0.95	306.620	59	58
		75	155	0.66	0.95	307.890	59	58
	4	77.5	154	0.66	0.95	309.180	58	58
		80	154	0.66	0.95	310.480	58	57
	5	82.5	151	0.66	0.95	311.760	58	57
		85	152	0.66	0.95	313.040	57	57
	6	87.5	153	0.66	0.95	314.330	56	56
		90	153	0.67	0.96	315.630	56	56
	1	92.5	152	0.66	0.95	316.920	56	56
		95	152	0.66	0.95	318.220	55	55
	2	97.5	152	0.66	0.95	319.500	55	55
		100	151	0.66	0.94	320.770	54	54
	3	102.5	153	0.66	0.94	322.050	54	54
		105	152	0.65	0.93	323.340	54	54
	4	107.5	153	0.66	0.94	324.610	53	53
		110	153	0.66	0.94	325.900	54	53
	5	112.5	153	0.66	0.94	327.220	54	53
		115	153	0.66	0.94	328.510	54	53
	6	117.5	154	0.66	0.94	329.800	54	53
		120	154	0.66	0.94	331.080	54	53

Calculations for: 0
Test #2

Client: Northern Pulp
Job Number: 121413456

Plant: Recovery Boiler
Location: Pictou, NS
Test: PM-2
Date: 10-Mar-15
Personnel: TBH / JJB/JAH

Calculated Parameters

Stack Gas Pressure, Ps (in.Hg)	30.20
Stack Gas Molecular Weight, Dry Basis, Md (lb/lb-mole)	30.73
Volume of Water Vapour Collected, Vwc (cu.ft)	25.997
Stack Gas Moisture Content (% as decimal)	0.283
Stack Gas Molecular Weight, Wet Basis, Ms (lb/lb-mole)	27.13

Isokineticity Checks

Check range	Within Criteria
Check average	Within Criteria

	Traverse Point	Time (min)	Stack Gas Temp, Ts (R)	S-type Pitot, delta P (in. H2O)	Orifice delta H (in. H2O)	Stack Gas Velocity, Us (ft/s)	Meter Press., Pm (in. Hg)	Gas Meter Avg. Temp, Tm (R)	Gas Meter Volume, Vm (cu. ft.)	Vol. @ Ref., Vmc (cu. ft.)	Isokinetics I (%)
Traverse 1	1	2.5	611	0.64	0.91	46.81	30.19	513	1.260	1.359	101.83
		5	612	0.64	0.91	46.84	30.19	514	1.260	1.378	103.33
	2	7.5	614	0.64	0.91	46.92	30.19	514	1.280	1.378	103.50
		10	614	0.66	0.94	47.85	30.19	515	1.270	1.366	101.03
	3	12.5	614	0.66	0.94	47.85	30.19	516	1.290	1.384	102.42
		15	615	0.65	0.93	47.32	30.19	516	1.300	1.394	103.99
	4	17.5	615	0.65	0.93	47.32	30.19	516	1.240	1.329	99.19
		20	615	0.65	0.93	47.32	30.19	517	1.290	1.380	102.99
	5	22.5	615	0.65	0.93	47.32	30.19	517	1.250	1.338	99.79
		25	616	0.65	0.93	47.36	30.19	518	1.270	1.358	101.38
	6	27.5	617	0.66	0.94	47.76	30.19	518	1.290	1.378	102.18
		30	617	0.66	0.94	47.76	30.19	519	1.260	1.344	99.70
	7	32.5	615	0.66	0.95	47.69	30.19	519	1.280	1.366	101.12
		35	614	0.66	0.95	47.65	30.19	519	1.270	1.355	100.25
	8	37.5	615	0.66	0.95	47.69	30.19	519	1.280	1.364	101.03
		40	616	0.66	0.95	47.73	30.19	519	1.290	1.375	101.90
	9	42.5	615	0.67	0.96	48.05	30.19	519	1.300	1.386	101.84
		45	615	0.66	0.95	47.69	30.19	520	1.280	1.362	100.83
	10	47.5	615	0.67	0.96	48.05	30.19	520	1.290	1.372	100.86
		50	615	0.67	0.96	48.05	30.19	520	1.310	1.395	102.52
	11	52.5	615	0.67	0.96	48.05	30.19	520	1.290	1.374	100.96
		55	616	0.65	0.93	47.36	30.19	520	1.310	1.394	104.07
	12	57.5	617	0.66	0.95	47.76	30.19	520	1.270	1.351	100.21
		60	615	0.66	0.95	47.69	30.19	520	1.290	1.374	101.72
Traverse 2	1	62.5	616	0.66	0.95	47.73	30.19	520	1.310	1.395	103.38
		65	615	0.66	0.95	47.69	30.19	520	1.280	1.362	100.83
	2	67.5	613	0.65	0.94	47.25	30.19	520	1.290	1.374	102.33
		70	615	0.66	0.95	47.69	30.19	520	1.280	1.363	100.93
	3	72.5	615	0.66	0.95	47.69	30.19	519	1.300	1.387	102.70
		75	615	0.66	0.95	47.69	30.19	519	1.270	1.355	100.33
	4	77.5	614	0.66	0.95	47.65	30.19	518	1.290	1.378	101.93
		80	614	0.66	0.95	47.65	30.19	518	1.300	1.390	102.82
	5	82.5	611	0.66	0.95	47.53	30.19	518	1.280	1.368	100.99
		85	612	0.66	0.95	47.57	30.19	517	1.280	1.370	101.17
	6	87.5	613	0.66	0.95	47.61	30.19	516	1.290	1.383	102.24
		90	613	0.67	0.96	47.97	30.19	516	1.300	1.394	102.26
	7	92.5	612	0.66	0.95	47.57	30.19	516	1.290	1.383	102.16
		95	612	0.66	0.95	47.57	30.19	515	1.300	1.396	103.15
	8	97.5	612	0.66	0.95	47.57	30.19	515	1.280	1.375	101.56
		100	611	0.66	0.94	47.53	30.19	514	1.270	1.367	100.88
	9	102.5	613	0.66	0.94	47.61	30.19	514	1.280	1.378	101.64
		105	612	0.65	0.93	47.21	30.19	514	1.290	1.388	103.34
	10	107.5	613	0.66	0.94	47.61	30.19	513	1.270	1.370	101.24
		110	613	0.66	0.94	47.61	30.19	514	1.290	1.390	102.74
	11	112.5	613	0.66	0.94	47.61	30.19	514	1.320	1.422	105.13
		115	613	0.66	0.94	47.61	30.19	514	1.290	1.390	102.74
	12	117.5	614	0.66	0.94	47.65	30.19	514	1.290	1.390	102.82
		120	614	0.66	0.94	47.65	30.19	514	1.280	1.379	102.02
		Total	Average	Average	Average	Average	Average	Average	Total	Total	Average
		120	614	0.66	0.94	47.58	30.19	517	61.660	65.997	101.88

Combustion Gas Data for: Northern Pulp

Client: Northern Pulp
Job Number: 121413456

Plant: Recovery Boiler
Location: Pictou, NS
Test: PM-2
Date: 10-Mar-15
Personnel: TBH / JJB/JAH

Test Start: 12:00 PM
Test Finish: 12:30 PM

Time (min)	O2 (%)	CO2 (%)	CO (ppm)	SO2 (ppm)	NOx (ppm)
0	4.5	15.9	2465	8	42
5	4.5	15.8	2647	7	34
10	4.4	16.0	2660	7	36
15	4.4	16.0	3058	6	49
20	4.5	16.0	2893	6	42
25	4.6	15.9	2973	5	59
30	4.6	15.8	3025	4	61
Average:	**4.5**	**15.9**	**2817**	**6**	**46**

Raw Data for: 0
Test #3

Client: Northern Pulp
Job Number: 121413456

Plant: Recovery Boiler
Location: Pictou, NS
Test: PM-3
Date: 11-Mar-15
Personnel: TBH/JJB/JAH

Test Start: 9:20 AM
Test Finish: 11:20 AM

Particulate Collected from Filter (mg):	1505.2
Particulate Collected from Probe Wash (mg):	714.6
Particulate Collected from Impinger Wash (mg):	3.3
Total Particulate Collected (mg):	2219.8

Impinger No.	Impinger Contents	Final Weight (g)	Tare Weight (g)	Weight of Moisture (g)
1	100 mL H2O	995.8	730.8	265.0
2	100 mL H2O	957.9	718.3	239.6
3	Blank	582.6	570.7	11.9
4	200g Silica Gel	973.8	949.7	24.1
			Total Weight Gain (g)	540.6
			Moisture Volume (mL)	540.6

Parameters

Barometric Pressure, Pbar (in. Hg)	29.55	O2, (%)	4.4	Stack Diameter, (in.)	138
Stack Static Pressure, Pstatic (in. H2O)	1.10	CO2, (%)	16.1	Stack Area, (sq. ft.)	103.87
Ambient Temp, (°F)	28	N2, (%)	79.5	Probe Length, (ft.)	2
H2O Volume Collected, Vw (mL)	540.60	CO(ppm)	3083.0	Nozzle Diameter, (in.)	0.234
Total # Sampling Points,	24	NOx (ppm)	52.1	Pitot Coefficient, (Cp)	0.794
Sampling Time per Point, (min)	5	SO2 (ppm)	27.9	Gamma, meter constant	1.021
Readings Taken Every __ mins	2.5			Port length (in.)	6
Regulatory Agency	0				

	Traverse Point	Time (min)	Stack Gas Temp, Ts (°F)	S-type Pitot delta P (in. H2O)	Orifice delta H (in. H2O)	Gas Meter Volume (cu. ft.)	Gas Meter Temp Inlet (°F)	Gas Meter Temp Outlet (°F)
						334.370		
Traverse 1	1	2.5	150	0.56	0.79	335.610	43	43
		5	149	0.57	0.80	336.810	44	43
	2	7.5	150	0.59	0.83	337.990	44	43
		10	150	0.59	0.83	339.250	44	43
	3	12.5	151	0.58	0.81	340.400	44	43
		15	152	0.58	0.81	341.620	45	43
	4	17.5	151	0.58	0.81	342.840	46	44
		20	150	0.57	0.80	344.010	46	44
	5	22.5	150	0.58	0.82	345.240	47	44
		25	151	0.58	0.82	346.470	47	44
	6	27.5	151	0.57	0.80	347.650	47	44
		30	151	0.57	0.80	348.860	47	44
	1	32.5	15	0.58	0.82	350.070	47	44
		35	150	0.59	0.85	351.210	46	45
	2	37.5	150	0.56	0.79	352.400	47	45
		40	151	0.58	0.82	353.650	47	45
	3	42.5	151	0.58	0.82	354.930	47	45
		45	151	0.58	0.82	356.070	47	45
	4	47.5	148	0.59	0.84	357.270	48	45
		50	151	0.57	0.80	358.490	48	45
	5	52.5	149	0.58	0.82	359.690	48	46
		55	151	0.57	0.80	360.860	48	46
	6	57.5	149	0.58	0.82	362.040	50	46
		60	149	0.57	0.81	363.170	50	46
						363.170		
Traverse 2	1	62.5	150	0.58	0.82	364.380	50	46
		65	150	0.57	0.81	365.570	50	46
	2	67.5	150	0.58	0.82	366.760	51	47
		70	150	0.58	0.82	367.980	51	47
	3	72.5	150	0.58	0.82	369.160	51	47
		75	148	0.58	0.83	370.260	51	47
	4	77.5	150	0.57	0.81	371.560	51	47
		80	150	0.59	0.84	372.770	51	47
	5	82.5	150	0.59	0.84	374.000	51	47
		85	150	0.58	0.82	375.210	51	47
	6	87.5	151	0.58	0.82	376.390	51	48
		90	150	0.57	0.81	377.620	51	48
	1	92.5	149	0.58	0.82	378.820	51	48
		95	150	0.58	0.82	380.020	52	48
	2	97.5	150	0.59	0.84	381.230	52	48
		100	149	0.59	0.84	382.440	53	49
	3	102.5	149	0.59	0.84	383.670	53	49
		105	148	0.60	0.86	384.900	53	49
	4	107.5	148	0.60	0.86	386.140	53	49
		110	149	0.60	0.86	387.380	54	50
	5	112.5	148	0.60	0.86	388.630	54	50
		115	149	0.59	0.84	389.860	54	50
	6	117.5	150	0.60	0.86	391.080	54	51
		120	149	0.60	0.86	392.310	54	52

Calculations for: 0
Test #3

Client: Northern Pulp
Job Number: 121413458

Plant: Recovery Boiler
Location: Pictou, NS
Test: PM-3
Date: 11-Mar-15
Personnel: TBH/JJB/JAH

Calculated Parameters

Stack Gas Pressure, Ps (in.Hg)	29.63
Stack Gas Molecular Weight, Dry Basis, Md (lb/lb-mole)	30.75
Volume of Water Vapour Collected, Vwc (cu.ft)	25.949
Stack Gas Moisture Content (% as decimal)	0.295
Stack Gas Molecular Weight, Wet Basis, Ms (lb/lb-mole)	28.96

Isokineticity Checks

Check range	Within Criteria
Check average	Within Criteria

	Traverse Point	Time (min)	Stack Gas Temp, Ts (R)	S-type Pitot, delta P (in. H2O)	Orifice delta H (in. H2O)	Stack Gas Velocity, Us (ft/s)	Meter Press., Pm (in. Hg)	Gas Meter Avg. Temp, Tm (R)	Gas Meter Volume, Vm (cu. ft.)	Vol. @ Ref., Vmc (cu. ft.)	Isokinetics I (%)
Traverse 1	1	2.5	610	0.56	0.79	44.29	29.61	503	1.240	1.338	109.76
		5	609	0.57	0.80	44.64	29.61	504	1.200	1.293	105.09
	2	7.5	610	0.59	0.83	45.46	29.61	504	1.180	1.272	101.67
		10	610	0.59	0.83	45.46	29.61	504	1.260	1.358	108.56
	3	12.5	611	0.58	0.81	45.11	29.61	504	1.150	1.239	100.01
		15	612	0.58	0.81	45.14	29.61	504	1.220	1.313	106.08
	4	17.5	611	0.58	0.81	45.11	29.61	505	1.220	1.311	105.78
		20	610	0.57	0.80	44.68	29.61	505	1.170	1.257	102.25
	5	22.5	610	0.58	0.82	45.07	29.61	506	1.230	1.320	106.46
		25	611	0.58	0.82	45.11	29.61	506	1.230	1.320	106.55
	6	27.5	611	0.57	0.80	44.72	29.61	506	1.160	1.267	103.10
		30	611	0.57	0.80	44.72	29.61	506	1.210	1.299	105.72
	7	32.5	475	0.58	0.82	38.77	29.61	506	1.210	1.299	92.42
		35	610	0.59	0.85	45.46	29.61	506	1.140	1.224	97.84
	8	37.5	610	0.56	0.79	44.29	29.61	506	1.190	1.276	104.71
		40	611	0.58	0.82	45.11	29.61	506	1.250	1.340	108.17
	9	42.5	611	0.58	0.82	45.11	29.61	506	1.280	1.373	110.77
		45	611	0.56	0.82	45.11	29.61	506	1.140	1.222	98.65
	10	47.5	608	0.59	0.84	45.38	29.61	507	1.200	1.286	102.61
		50	611	0.57	0.80	44.72	29.61	507	1.220	1.307	106.39
	11	52.5	609	0.58	0.82	45.03	29.61	507	1.200	1.284	103.47
		55	611	0.57	0.80	44.72	29.61	507	1.170	1.252	101.93
	12	57.5	609	0.58	0.82	45.03	29.61	508	1.160	1.260	101.55
		60	609	0.57	0.81	44.64	29.61	508	1.130	1.207	98.09
Traverse 2	1	62.5	610	0.58	0.82	45.07	29.55	508	1.210	1.290	104.00
		65	610	0.57	0.81	44.68	29.61	508	1.190	1.271	103.39
	2	67.5	610	0.58	0.82	45.07	29.61	509	1.190	1.269	102.29
		70	610	0.58	0.82	45.07	29.61	509	1.220	1.301	104.87
	3	72.5	610	0.58	0.82	45.07	29.61	509	1.180	1.258	101.43
		75	608	0.58	0.83	45.00	29.61	509	1.100	1.173	94.40
	4	77.5	610	0.57	0.81	44.68	29.61	509	1.300	1.386	112.72
		80	610	0.59	0.84	45.46	29.61	509	1.210	1.290	103.12
	5	82.5	610	0.59	0.84	45.46	29.61	509	1.230	1.311	104.83
		85	610	0.58	0.82	45.07	29.61	509	1.210	1.290	104.01
	6	87.5	611	0.58	0.82	45.11	29.61	510	1.180	1.257	101.41
		90	610	0.57	0.81	44.68	29.61	510	1.230	1.310	106.55
	7	92.5	609	0.58	0.82	45.03	29.61	510	1.200	1.278	102.98
		95	610	0.58	0.82	45.07	29.61	510	1.200	1.277	102.95
	8	97.5	610	0.59	0.84	45.46	29.61	510	1.210	1.287	102.82
		100	609	0.59	0.84	45.42	29.61	511	1.210	1.285	102.64
	9	102.5	609	0.59	0.84	45.42	29.61	511	1.230	1.306	104.34
		105	608	0.60	0.86	45.77	29.61	511	1.230	1.306	103.38
	10	107.5	608	0.60	0.86	45.77	29.61	511	1.240	1.317	104.22
		110	609	0.60	0.86	45.80	29.61	512	1.240	1.314	104.11
	11	112.5	608	0.60	0.86	45.77	29.61	512	1.250	1.325	104.86
		115	609	0.59	0.84	45.42	29.61	512	1.230	1.304	104.14
	12	117.5	610	0.60	0.86	45.84	29.61	513	1.220	1.292	102.41
		120	609	0.60	0.86	45.80	29.61	513	1.230	1.301	103.07
		Total 120	Average 607	Average 0.58	Average 0.82	Average 45.02	Average 29.61	Average 508	Total 57.940	Total 61.912	Average 103.60

Combustion Gas Data for: Northern Pulp

Client: Northern Pulp
Job Number: 121413456

Plant: Recovery Boiler
Location: Pictou, NS
Test: PM-3
Date: 11-Mar-15
Personnel: TBH/JJB/JAH

Test Start: 11:00 AM
Test Finish: 11:30 AM

Time (min)	O2 (%)	CO2 (%)	CO (ppm)	SO2 (ppm)	NOx (ppm)
0	4.5	15.9	3018	25	47
5	4.7	15.9	3129	36	49
10	4.0	16.4	3099	44	51
15	4.2	16.1	2938	30	52
20	4.6	15.9	3214	20	54
25	4.5	16.0	3009	17	56
30	4.2	16.3	3174	23	56
Average:	**4.4**	**16.1**	**3083**	**28**	**52**

DATA ENTRY

Northern Pulp
Pictou, NS
Fuel: Fuel oil
Operating Conditions: Normal
Emission Control Equipment: wet scrubber
Stack Height from Grade: 69 m
Stack Diameter: 3.51 m

Reference Temperature, Tref (F):	77
(K):	298
Reference Pressure, Pref (in.Hg):	29.92
(Bar):	1.0

Parameter	Symbol	Units	Test 1	Test 2	Test 3	Average
Test ID	-	-	PM-1	PM-2	PM-3	-
Date	-	-	10-Mar-15	10-Mar-15	11-Mar-15	n/a
Start Time	-	-	9:00 AM	12:15 PM	9:20 AM	n/a
End Time	-	-	11:00 AM	2:15 PM	11:20 AM	n/a
Total Sampling Time	-	min	120	120	120	120
Stack Diameter	D	in.	138	138	138	138
Average Stack Gas Temperature	Ts	F	154	154	147	152
Average Dry Gas Meter Temperature	Tm	F	51	57	48	52
Barometric Pressure	Pbar	in.Hg	30.13	30.12	29.55	29.93
Stack Static Pressure	Pstatic	in.H2O	1.10	1.10	1.10	1.10
Average Pressure Drop (Head)	dP	in.H2O	0.59	0.66	0.58	0.61
Average deltaH Orifice	dH	in.H2O	0.83	0.94	0.82	0.87
Average Meter Temperature	Tm	F	51	57	48	52
Gas Sample Volume	Vm	cu.ft	58.91	61.66	57.94	59.50
Average Isokinetics	I	%	105	102	104	103
Nozzle Diameter	Dn	in.	0.234	0.234	0.234	0.234
Pitot Coefficient	Cp	-	0.794	0.794	0.794	0.794
Gamma, meter constant	y	-	1.021	1.021	1.021	1.021
Reference Temperature	Tref	R	537	537	537	537
Reference Pressure	Pref	in.Hg	29.92	29.92	29.92	29.92
Stack Gas Oxygen Content	Co2	%	4.8	4.5	4.4	4.6
Stack Gas Carbon Dioxide Content	Cco2	%	15.6	15.9	16.1	15.9
Stack Gas Nitrogen Content	Cn2	%	79.6	79.6	79.5	79.6
Stack Gas Sulphur Dioxide Content	Cso2	ppm	8.1	6.1	27.9	14.0
Stack Gas Nitrogen Oxides Content	Cnox	ppm	23.7	46.1	52.1	40.7
Stack Gas Carbon Monoxide Content	Cco	ppm	1772.3	2817.3	3083.0	2557.5
Volume of Water Collected	Vw	mL	540	542	541	541
Particulate Collected from Filter	-	mg	1743.4	1626.3	1505.2	1625.0
Particulate Collected from Probe Wash	-	mg	730.6	1152.8	714.6	866.1
Particulate Collected from Impinger Wash	-	mg	1.94	4.54	3.27	3.25
Total Particulate Collected (excluding impingers)	Mp	mg	2,474	2,779	2,220	2,491

Legend:
F - degrees Fahrenheit
K - degrees Kelvin
Bar - bars
in.Hg - inches of mercury
in. - inches
in.H2O - inches of water
cu.ft - cubic feet
R - degrees Rankin
NOx - as NO2

CALCULATIONS

Northern Pulp
Pictou, NS
Fuel: Fuel oil
Operating Conditions: Normal
Emission Control Equipment: wet scrubber
Stack Height from Grade: 69 m
Stack Diameter: 3.51 m

Variable	Symbol	Units	Calculation	Test 1	Test 2	Test 3	Average
Stack Area	As	sq.ft	As = Pi x ((D/12)^2)/ 4	103.87	103.87	103.87	103.87
		sq.m	As (sq.m) = As (sq.ft) x 0.0929	9.65	9.65	9.65	9.65
Barometric Pressure	Pbar	kPa	Pbar (kPa) = Pbar (in.Hg) x 3.386	102.0	102.0	100.1	101.4
Stack Static Pressure	Pstatic	kPa	Pstatic (kPa) = Pstatic (in.H2O) x 0.249	0.27	0.27	0.27	0.27
Avg. Stack Temperature	Ts	R	Ts (R) = Ts (F) + 460	614	614	607	612
Avg. Meter Temperature	Tm	R	Tm (R) = Tm (F) + 460	511	517	508	511.8
Nozzle Diameter	Dn	mm	Dn (mm) = Dn (in.) x 25.4	6	6	6	5.9
Gas Meter Pressure	Pm	in.Hg	Pm = Pbar + (dH / 13.6)	30.19	30.19	29.61	30.00
Sample Volume at Ref Cond	Vmc	cu.ft	Vmc = Tref/Pref x (Vm x Pm x y) / Tm	63.79	66.00	61.92	63.9
		cu.m	Vmc (cu.m) = 0.02832 x Vmc (cu.ft)	1.81	1.87	1.75	1.81
Volume of Water Vapour	Vwc	cu.ft	Vwc = 0.0480 x Vw	25.92	26.00	25.95	25.96
Water Fraction	Bwo	-	Bwo = Vwc / (Vwc + Vmc)	0.289	0.283	0.295	0.3
Molecular Weight, Dry	Md	lb/lb-mol	Md = 0.44 (Co2) + 0.32 (Co2) + 0.28 (Co2)	30.69	30.73	30.75	30.7
Molecular Weight, Wet	Ms	lb/lb-mol	Ms = Md (1 - Bwo) + (18 x Bwo)	27.03	27.13	26.98	27.0
Stack Pressure	Ps	in.Hg	Ps = Pbar + (Pstatic / 13.6)	30.21	30.20	29.63	30.01
Stack Gas Velocity	Us	ft/s	Us = 85.33 x Cp x ((dP x Ts)/(Ps x Ms))^0.5	45.08	47.58	45.02	45.9
		m/s	Us (m/s) = 0.3048 x Us (ft/s)	13.74	14.50	13.72	14.0
Actual Stack Gas Flow Rate	Q	acfm	Q = 60 x Us x As	280,972	296,542	280,554	286,023
Dry Stack Gas Flow Rate	Qs	Rcfm	Qs = Q x (1-Bwo) x (Tref/Ts) x (Ps/Pref)	176,516	187,783	173,197	179,165
		Rcms	Qs (Rcms) = 0.000472 x Qs (Rcfm)	83.32	88.63	81.75	84.6
Sulphur Dioxide - SO2							
SO2 Measured Concentration	Cso2	ppm	Measurement from Flue Gas Analyzer	8.14	6.14	27.86	14.05
Uncorrected @ Ref Cond	Cso2	mg/Rcm	Cso2 (mg/Rcm) = Cso2 (ppm) x 2.62	21.33	16.09	72.99	36.80
SO2 Emission Rate	ERso2	g/s	ERso2 = Cso2/1000 x Qs	1.78	1.43	5.97	3.06
		kg/hr	ERso2 (kg/hr) = 3.6 x ERso2 (g/s)	6.40	5.14	21.48	11.00
SO2 Concentration							
Corrected to 11% O2	Cso2	mg/Rcm	Cso2 (11% O2) = Cso2 (mg/Rcm) x (20.9-11) / (20.9-Co2)	13.12	9.72	43.75	22.20
Corrected to 3% O2	Cso2	mg/Rcm	Cso2 (3% O2) = Cso2 (mg/Rcm) x (20.9-3) / (20.9-Co2)	23.72	17.57	79.11	40.13
Corrected to 12% CO2	Cso2	mg/Rcm	Cso2 (12% CO2) = Cso2 (mg/Rcm) x (12/Cco2)	16.37	12.14	54.50	27.67
Nitrogen Oxides - NOx							
NOx Measured Concentration	Cnox	ppm	Measurement from Flue Gas Analyzer	23.71	46.14	52.14	40.67
Uncorrected @ Ref Cond	Cnox	mg/Rcm	Cnox (mg/Rcm) = Cnox (ppm) x 1.882	44.63	86.84	98.13	76.53
NOx Emission Rate	ERnox	g/s	ERnox = Cnox/1000 x Qs	3.72	7.70	8.02	6.48
		kg/hr	ERnox (kg/hr) = 3.6 x ERnox (g/s)	13.39	27.71	28.88	23.33
NOx Concentration							
Corrected to 11% O2	Cnox	mg/Rcm	Cnox (11% O2) = Cnox (mg/Rcm) x (20.9-11) / (20.9-Co2)	27.44	52.42	58.83	46.23
Corrected to 3% O2	Cnox	mg/Rcm	Cnox (3% O2) = Cnox (mg/Rcm) x (20.9-3) / (20.9-Co2)	49.62	94.78	106.37	83.59
Corrected to 12% CO2	Cnox	mg/Rcm	Cnox (12% CO2) = Cnox (mg/Rcm) x (12/Cco2)	34.24	65.48	73.27	57.66
Carbon Monoxide - CO							
CO Measured Concentration	Cco	ppm	Measurement from Flue Gas Analyzer	1772.29	2817.29	3083.00	2557.52
Uncorrected @ Ref Cond	Cco	mg/Rcm	Cco (mg/Rcm) = Cco (ppm) x 1.145	2029.27	3225.79	3530.04	2928.36
CO Emission Rate	ERco	g/s	ERco = Cco/1000 x Qs	169.07	285.91	288.58	247.85
		kg/hr	ERco (kg/hr) = 3.6 x ERco (g/s)	608.65	1029.29	1038.88	892.27
CO Concentration							
Corrected to 11% O2	Cco	mg/Rcm	Cco (11% O2) = Cco (mg/Rcm) x (20.9-11) / (20.9-Co2)	1247.81	1947.28	2116.19	1770.43
Corrected to 3% O2	Cco	mg/Rcm	Cco (3% O2) = Cco (mg/Rcm) x (20.9-3) / (20.9-Co2)	2256.14	3520.83	3826.24	3201.07
Corrected to 12% CO2	Cco	mg/Rcm	Cco (12% CO2) = Cco (mg/Rcm) x (12/Cco2)	1556.70	2432.37	2635.76	2208.28
Particulate Concentration	Cs	mg/Rcm	Cs = Mp / Vmc	1389.56	1486.91	1265.99	1374.15
Particulate Emission Rate	ERp	g/s	ERp = Cs/1000 x Qs	114.11	131.79	103.49	116.46
		kg/hr	ERp (kg/hr) = 3.6 x ERp (g/s)	410.78	474.44	372.58	419.27
Particulate Concentration							
Corrected to 11% O2	Cs	mg/Rcm	Cs (11% O2) = Cs x (20.9-11) / (20.9-Co2)	842.15	897.58	758.94	832.89
Corrected to 3% O2	Cs	mg/Rcm	Cs (3% O2) = Cs x (20.9-3) / (20.9-Co2)	1522.68	1622.90	1372.22	1505.93
Corrected to 12% CO2	Cs	mg/Rcm	Cs (12% CO2) = Cs x (12/Cco2)	1050.62	1121.19	945.27	1039.03

Legend:
sq ft - square feet
sq m - square metres
Pi - 3.142
R - degrees Rankin
ppm - parts per million
in.Hg - inches of mercury
cu.ft - cubic feet
cu.m - cubic metres
Ref Cond - reference temperature and pressure (25 C and 101.3 kPa)
Rcms - dry reference cubic metres per second
Rcfm - dry reference cubic feet per minute
mg/Rcm - milligrams per dry reference cubic metre
g/s - grams per second
NOx - as NO2
acfm - actual cubic feet per minute

OFFICIAL STACK TESTING RESULTS
Northern Pulp
Pictou, NS

Fuel: Fuel oil
Operating Conditions: Normal
Emission Control Equipment: wet scrubber
Stack Height from Grade: 69 m
Stack Diameter: 3.51 m

Parameter	Test 1	Test 2	Test 3	Average	0 Limits
Test ID	PM-1	PM-2	PM-3	-	-
Test Date	10-Mar-15	10-Mar-15	11-Mar-15	-	-
Stack Gas Temperature (C)	67.6	67.8	63.9	66.4	-
Moisture Content (%)	28.9	28.3	29.5	28.9	-
Velocity (m/s)	13.7	14.5	13.7	14.0	-
Volumetric Flow (Rcms)	83.3	88.6	81.7	84.6	-
Oxygen - O2 (%)	4.80	4.50	4.39	4.56	-
Carbon Dioxide - CO2 (%)	15.6	15.9	16.1	15.9	-
Sulphur Dioxide - SO_2					
SO_2 Measured Concentration (ppm)	8.14	6.14	27.9	14.0	-
SO_2 Concentration at 11% O_2 (mg/Rcm)	13.1	9.72	43.8	22.2	-
Emission Rate (kg/hr)	6.40	5.14	21.48	11.00	-
Nitrogen Oxides - NOx					
NOx Measured Concentration (ppm)	23.7	46.1	52.1	40.7	-
NOx Concentration at 11% O_2 (mg/Rcm)	27.4	52.4	58.8	46.2	-
Emission Rate (kg/hr)	13.4	27.7	28.9	23.3	-
Carbon Monoxide - CO					
CO Measured Concentration (ppm)	1772	2817	3083	2558	-
CO Concentration at 11% O_2 (mg/Rcm)	1248	1947	2116	1770	-
Emission Rate (kg/hr)	609	1029	1039	892	-
Particulate Matter - PM					
Particulate Concentration at 11% O_2 (mg/Rcm)	842	898	759	833	375
Particulate Emission Rate (kg/hr)	411	474	373	419	-

Legend:
C - degrees Celsius
m/s - metres per second
Rcms - dry reference cubic metres per second
ppm - parts per million
Ref Cond - reference temperature and pressure (25 C and 101.3 kPa)
mg/Rcm - miligrams per dry reference cubic metre
NOx - as NO2
ND - non-detectable

Particulate Recoveries: Impinger Catch, Probe Wash, Filter Catch

Client: Northern Pulp
Facility: Recovery Boiler
Location: Pictou, NS
Job Number: 121413456

IMPINGER CATCH

Container ID	Beaker Pre Weights (g) Date Analysed by Trial 1	Trial 2	Trial 3	Average	Sample ID	Recoveries Jar + Sample + Rinse (g)	Jar Tare (g)	Sample Collected (g)	Rinse Water (g)	Total Rinse Water (g)	Beaker Post Weights (g) Date Analysed by Trial 1	Trial 2	Trial 3	Average	Uncorrected Particulate Weight (g)	Corrected Particulate Weight (g)
E1	110 0690	110 0695		110 0693	PM-1	1018 6	388 1	540 1	4 1	94 5	110 0715	110 0715		110 0715	0 0022	0 0019
W5	112 8650	112 8655		112 8653	PM-2	1019 7	388 5	541 6	5 1	94 7	112 8702	112 8700		112 8701	0 0049	0 0045
O5	111 9711	111 9712		111 9712	PM-3	1079 2	456 9	540 6	4 0	85 7	111 9749	111 9745		111 9747	0 0036	0 0033
																Conc. (g/mL)
H3	109 2005	109 2006		109 2006	WB	608 6	455 1	153 5		153 5	109 2010	109 2011		109 2011	0 0005	0 000003

PROBE WASH

Container ID	Beaker Pre Weights (g) Date Analysed by Trial 1	Trial 2	Trial 3	Average	Sample ID	Recoveries Jar + Acetone (g)	Jar Tare (g)	Recovered Acetone (g)	Rinse Acetone	Total Acetone (g)	Beaker Post Weights (g) Date Analysed by Trial 1	Trial 2	Trial 3	Average	Uncorrected Particulate Weight (g)	Corrected Particulate Weight (g)
S1	109 1753	109 1754		109 1754	PM-1	419 9	324 8	95 1	42 2	137 3	109 9076	109 9076		109 9076	0 7323	0 7306
Q3	111 5952	111 5950		111 5951	PM-2	416 3	324 6	91 7	35 7	127 4	112 7490	112 7494		112 7492	1 1541	1 1528
V1	111 9278	111 9279		111 9279	PM-3	406 8	301 1	105 7	32 6	138 3	112 6438	112 6440		112 6439	0 7160	0 7148
																Conc. (g/mL)
X4	112 2894	112 2896		112 2895	AB	393 2	324 9	68 3		68 3	112 2904	112 29		112 2902	0 0007	0 000008

Density of Acetone 0.7850 g/ml

FILTER CATCH

Filter ID	Pre Weights (g) Analysed by Trial 1	Trial 2	Trial 3	Average	Sample ID	Post Weights (g) Date: Analysed by Trial 1	Trial 2	Trial 3	Average	Particulate Weight from Filter (g)
2001-16	0 4134	0 4130		0 4132	PM-1	2 1566	2 1566		2 1566	1 7434
0226-17	0 3524	0 3521		0 3523	PM-2	1 9785	1 9785		1 9785	1 6263
0226-18	0 3510	0 3514		0 3512	PM-3	1 8564	1 8564		1 8564	1 5052

Northern Pulp
Recovery Boiler

121413456

Stack Gas Velocity Profiles
Pictou, NS