NOVA SCOTIA
Transportation and Public Works

STANDARD SPECIFICATION

Highway Construction and Maintenance

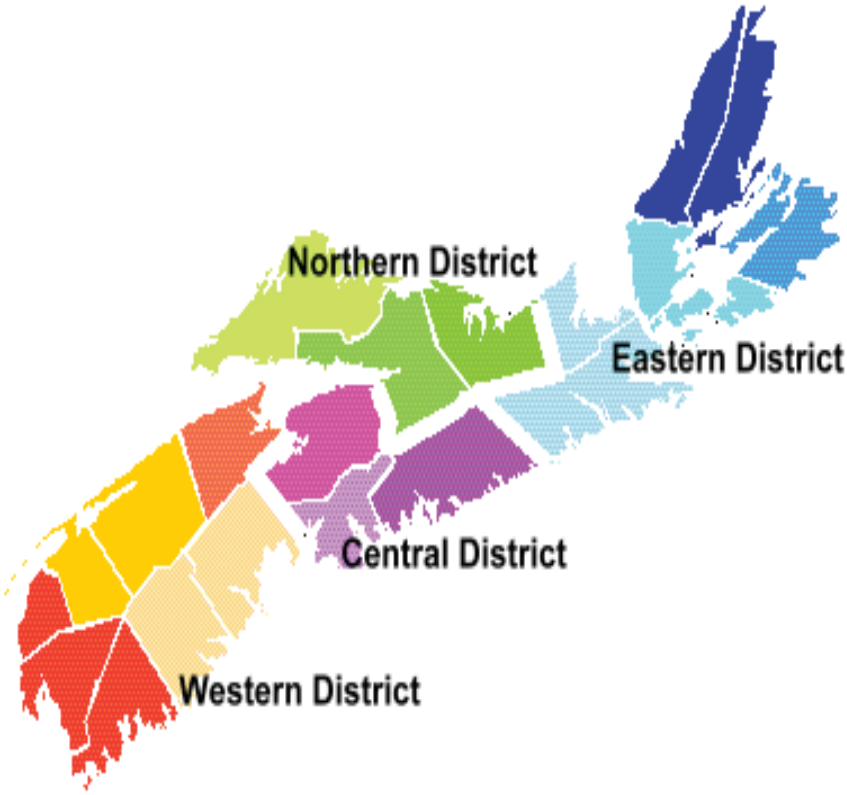

February 1, 1997

Enquiries...

Seven Standard Specification review teams have been formed with the mandate of reviewing and revising existing Standard Specifications and developing new ones:

Division	Team Leader	Phone	Fax	E-mail
General Requirements and Covenants	Marlene Osmond	902-424-4321	902-424-0571	Marlene.Osmond@novascotia.ca
Earthworks and Granular Materials	Mike Deering	902-860-5604	902-861-4828	Mike.Deering@novascotia.ca
Pavements	Sean O'Connor	902-860-5600	902-861-4828	Sean.OConnor@novascotia.ca
Structures	Ryan Swinemar	902-424-2041	902-424-0570	Ryan.Swinemar@novascotia.ca
Concrete (PCC)	Jim Manthorne	902-860-4580	902-861-4828	Jim.Manthorne@novascotia.ca
Miscellaneous	Jim Chisholm	902-860-5602	902-861-4828	Jim.Chisholm@novascotia.ca
Environmental Protection	Peter Fleming	902-424-2723	902-424-7544	Peter.Fleming@novascotia.ca
Drawings	Keith Boddy	902-424-5498	902-424-0571	Keith.Boddy@novascotia.ca

Any questions regarding the **review process** and **content** or **revisions** of the Standard Specifications can be directed to any one of the team leaders.

Any questions regarding interpretation of the Standard Specifications for a particular contract should be directed to the Engineer in charge of administering the contract.

How to Reach Us
There's now a single point of contact when you need to get in touch with the Department of Transportation and Infrastructure Renewal. Any day, any time, 24/7. The Operation Contact Centre can be reached 1-844-696-7737 or by email at tir-occ@novascotia.ca.

Revisions to Standard Specifications:

The Nova Scotia Department of Transportation and Infrastructure Renewal performs an annual review of it's Standard Specifications for Highway Construction and Maintenance. As deemed necessary specifications may be revised or new specifications developed.

It is the responsibility of all holders of the Standard Specification book to obtain new or revised specifications and insert them in the book. The following page has been included for the convenience of book holders to record the insertion of revisions to the book.

Contact information is listed on Page I.

Record of Revisions:

Division	Section	Revision Date	Inserted By	Date Inserted

Record of Revisions:

Division	Section	Revision Date	Inserted By	Date Inserted

TABLE OF CONTENTS

Enquiries.....I
Revisions: Book Holder's Responsibility to Acquire Revisions.....II
Record of Revisions.....III
Table of Contents.....i

DIVISION 1 - GENERAL REQUIREMENTS AND COVENANTS

SECTION		PAGE	
1	Definition of Terms	1-1-1	Rev 2019 (1)
2	Instructions to Bidders – Paper Bidding	1-2-1	Rev 2019 (1)
	1.0 Contents of Tender	1-2-1	Rev 2008
	2.0 Interpretation of Approximate Estimate of Quantities	1-2-1	
	3.0 Examination of Plans, Specifications, Tender Quantities and Site of the Work	1-2-1	Rev 2006
	4.0 Preparation of Tender	1-2-1	
	5.0 Post Bid Submissions	1-2-1	Rev 2019 (1)
	6.0 Taxes	1-2-1	Rev 1998
	7.0 Receiving Tenders	1-2-2	Rev 2019 (1)
	8.0 Competency of Bidders	1-2-2	Rev 2014
	9.0 Rejection of Tender	1-2-2	Rev 2006
	10.0 Bid Security	1-2-2	
	11.0 Delivery of Tender	1-2-2	Rev 2019 (1)
	12.0 Modification of Tender	1-2-2	Rev 2019 (1)
	13.0 Withdrawal of Tender	1-2-3	
	14.0 Disqualification of Tender	1-2-3	
	15.0 Material Guaranty	1-2-3	
	16.0 Value Engineering Alternate (VEA)	1-2-3	
	17.0 Procedures for Tender Openings and Evaluations	1-2-3	Rev 2007
	18.0 Award of Tender	1-2-4	Rev 2014
2E	Instructions to Bidders - Electronic Bidding	1-2E-1	Rev 2019 (2)
	1.0 Contents of Tender	1-2E-1	Rev 2019 (2)
	2.0 Interpretation of Approximate Estimate of Quantities	1-2E-1	Rev 2019 (2)
	3.0 Examination of Plans, Specifications, Tender Quantities and Site of the Work	1-2E-1	Rev 2019 (2)
	4.0 Preparation of Bids	1-2E-1	Rev 2019 (2)
	5.0 Post Bid Submissions	1-2E-2	Rev 2019 (2)
	6.0 Taxes	1-2E-3	Rev 2019 (2)
	7.0 Receiving Bids	1-2E-3	Rev 2019 (2)
	8.0 Competency of Bidders	1-2E-3	Rev 2019 (2)
	9.0 Rejection of Bid	1-2E-4	Rev 2019 (2)
	10.0 Bid Security – Registration for Electronic Bidding	1-2E-4	Rev 2019 (2)
	11.0 Delivery of Tender	1-2E-5	Rev 2019 (1)
	12.0 Modification of Bid	1-2E-5	Rev 2019 (2)
	13.0 Withdrawal of Bid	1-2E-5	Rev 2019 (2)
	14.0 Disqualification of Tender	n/a	Deleted 2019
	14.0 Material Guaranty	1-2E-5	
	15.0 Substitutions	1-2E-5	New 2019 (2)
	16.0 Value Engineering Alternate (VEA)	1-2E-5	Rev 2019 (2)
	17.0 Procedures for Bid Openings and Evaluations	1-2E-5	Rev 2019 (2)
	18.0 Award of Tender	1-2E-6	Rev 2014

SECTION		PAGE	
3	Agreement	1-3-1	Rev 2019 (2)
	1.0 General Covenant	1-3-1	
	2.0 No Implied Contract	1-3-1	Rev 2019 (2)
	3.0 How Party of First Part is Read	1-3-1	Rev 2019 (2)
	4.0 Construction of Clause as Covenants	1-3-1	Rev 2019 (2)
	5.0 Incorporation in Contract	1-3-1	Rev 2019 (2)
	6.0 Intent of Plans and Specifications	1-3-1	Rev 2019 (2)
	7.0 What Items in Contract Include	1-3-1	Rev 2019 (1)
	8.0 Contract Security	1-3-2	Rev 2019 (2)
	9.0 Investigation of Every Condition of Work	1-3-3	Rev 2019 (2)
	10.0 Employment of Contractor and Workers	1-3-3	Rev 2019 (1)
	11.0 Lines and Grades	1-3-3	Rev 2019 (2)
	12.0 Designated Highways	1-3-3	Rev 2019 (1)
	13.0 Condition of Roads Immaterial	1-3-4	Rev 2019 (1)
	14.0 Patented Devices, Materials, and Processes	1-3-4	Rev 2019 (1)
	15.0 Materials Furnished by the Department	1-3-4	Rev 2019 (2)
	16.0 Land Acquisition	1-3-4	Rev 2019 (1)
	17.0 Regulations and Guidelines Contained in Appendix B	1-3-5	Rev 2019 (1)
	18.0 Performance by Contractor	1-3-5	Rev 2019 (1)
	19.0 Quality of Work and Material	1-3-5	Rev 2019 (1)
	20.0 Contractor's Personal Attention	1-3-5	Rev 2019 (2)
	21.0 Schedule of Work	1-3-5	Rev 2019 (1)
	22.0 Time of Completion	1-3-5	Rev 2019 (2)
	23.0 Character of Workers and Equipment	1-3-5	Rev 2019 (1)
	24.0 Records of Contractor Open for Inspection	1-3-5	Rev 2019 (1)
	25.0 Notice to Contractor	1-3-5	Rev 2019 (2)
	26.0 Work not in Contract	1-3-6	Rev 2019 (1)
	27.0 Inspection General	1-3-6	Rev 2019 (2)
	28.0 Unbalanced Bids	1-3-6	New 2019 (2)
	29.0 Financial Advantage	1-3-6	New 2019 (2)
	30.0 Work under Control of Engineer	1-3-7	Rev 2019 (2)
	31.0 Engineer's Decision Final	1-3-7	Rev 2019 (2)
	32.0 Force Majeure	1-3-7	Rev 2019 (1)
	33.0 Extension of Time	1-3-7	New 2019 (1)
	34.0 Delays Beyond Time Limit	1-3-8	Rev 2019 (2)
	35.0 Changes in Contract	1-3-8	Rev 2019 (1)
	36.0 Unforseen Work	1-3-8	Rev 2019 (2)
	37.0 Additional Work	1-3-9	Rev 2019 (2)
	38.0 Default or Removal of Work from the Contractor	1-3-9	Rev 2019 (1)
	39.0 Defects and Omissions	1-3-9	Rev 2019 (2)
	40.0 Defective Work and Material	1-3-10	Rev 2019 (2)
	41.0 Annulment of Contract	1-3-10	Rev 2019 (2)
	42.0 Certificate of Substantial Performance	1-3-10	Rev 2019 (1)
	43.0 No Waiver	1-3-11	Rev 2019 (2)
	44.0 Refusal of Contractor to do Work	1-3-11	Rev 2019 (2)
	45.0 Power to Employ Additional Resources	1-3-11	Rev 2019 (2)
	46.0 Subletting or Assigning of Contract	1-3-11	Rev 2019 (2)
	47.0 Contractor Liable for Risks	1-3-12	Rev 2019 (2)
	48.0 Contractor Liable for Damages	1-3-12	Rev 2019 (2)
	49.0 Claims Against Contractor	1-3-12	Rev 2019 (2)
	50.0 Claims of Contractor	1-3-13	Rev 2019 (2)
	51.0 Minister Covenants to Pay	1-3-13	Rev 2019 (2)
	52.0 Payments	1-3-13	Rev 2019 (2)
	53.0 Final Payment	1-3-14	Rev 2019 (1)

DIVISION 1 - GENERAL REQUIREMENTS AND COVENANTS (Continued)

SECTION		PAGE	
4	General Provisions	1-4-1	Rev 2019 (1)
	1.0 Cleaning of Premises	1-4-1	Rev 2019 (1)
	2.0 Sanitary Provisions	1-4-1	Rev 2019 (1)
	3.0 Fire Protection	1-4-1	Rev 2019 (1)
	4.0 Accommodating Traffic and Traffic Control	1-4-1	Rev 2019 (1)
	5.0 Registered Weight and Axle Weight	1-4-2	Rev 2019 (1)
	6.0 Weighing Procedures	1-4-2	Rev 2019 (1)
	7.0 Truck Weigh Scale	1-4-3	Rev 2019 (1)
	8.0 Borrow, Gravel, and Plant Mix Aggregate, Pit and Plant Sites	1-4-6	Rev 2019 (1)
	9.0 Occupational Health and Safety Act	1-4-7	Rev 2019 (1)
	10.0 Blasting	1-4-7	Rev 2019 (1)
	11.0 Dispute Resolution for Asphalt Concrete Segregation	1-4-8	Rev 2019 (1)
5	Environmental Protection	1-5-1	Rev 2019 (1)
	1.0 Environmental Protection	1-5-1	Rev 2010
	2.0 Erosion Prevention	1-5-2	Rev 2014
	3.0 Sediment Control	1-5-2	New 2004
	4.0 Borrow and Gravel Pits	1-5-2	
	5.0 Mineralized Rock Excavation	1-5-2	
	6.0 Management of Surplus Brush, Slash or Non-Merchantable Timber	1-5-2	Rev 2004
	7.0 Work Progression Schedule	1-5-2	
	8.0 Inspections and Maintenance	1-5-4	Rev 2007
	9.0 Disposal of Waste Materials	1-5-4	New 2011

DIVISION 2 - EARTHWORKS

SECTION		PAGE	
1	Clearing	2-1-1	Rev 2014
2	Grubbing	2-2-1	Rev 2000
3	Roadway and Drainage Excavation	2-3-1	Rev 2011
4	Disposal of Surplus Materials	2-4-1	Rev 1998
5	Borrow	2-5-1	Rev 2000
6	Subgrade	2-6-1	Rev 1998
7	Shoulders	2-7-1	Rev 2008
8	Compaction	2-8-1	Rev 2002
9	Water for Compaction and Dust Control	2-9-1	Rev 1999
10	Rough Grading	2-10-1	Rev 1999
11	Fine Grading	2-11-1	Rev 1999
12	Foundation Excavation	2-12-1	Rev 2014
13	Foundation Excavation for Bridges	2-13-1	Rev 1998

DIVISION 3 - GRANULAR MATERIALS

SECTION		PAGE	
1	Gravel Borrow	3-1-1	Rev 2019 (2)
2	Gravel Type 1, 1S, 2 & M	3-2-1	Rev 2019 (2)
3	Air Cooled Blast Furnace Slag	3-3-1	Rev 2019 (1)
4	Clear Stone	3-4-1	Rev 2019 (2)
5	Compaction of Gravels	3-5-1	
6	Loose Laid Rip Rap	3-6-1	Rev 2008
7	Hand Laid Rip Rap	3-7-1	Rev 2009
8	Armour Rock	3-8-1	Rev 2019 (2)
9	Rock Fill	3-9-1	Rev 2019 (1)
10	Fill Against Structure	3-10-1	Rev 2019 (2)
11	Unshrinkable Backfill	3-11-1	
12	Gravel Type 1, 1S, 2 & M (EPS)	3-12-1	Rev 2019 (2)

DIVISION 4 - PAVEMENTS

SECTION		PAGE	
1	Emulsified Asphalt	4-1-1	Rev 2019 (1)
2	Performance Graded Asphalt Binder (PGAB)	4-2-1	Rev 2019 (2)
3	Asphalt Concrete Curbs & Gutters	4-3-1	Rev 2019 (1)
4	Asphalt Concrete Hot Mixed - Hot Placed	4-4-1	Rev 2014
5	Liquid Asphalt Primer	4-5-1	Rev 2007
6	Removal of Asphalt Concrete	4-6-1	Rev 2011
7	Asphalt Concrete Patching	4-7-1	Rev 2018
8	Asphalt Concrete Paving of Bridge Decks	4-8-1	Rev 2019 (1)
9	Graded Aggregate Seal (Two Courses)	4-9-1	Deleted 2002
10	Graded Aggregate Seal (One Course)	4-10-1	Deleted 2002
11	Crack Filling and Crack Sealing - (EPWS)	4-11-1	Rev 2019 (1)
12	Seal Coat - (EPWS)	4-12-1	Rev 2019 (1)
13	Reclaimed Asphalt Concrete	4-13-1	
14	Sand Seal Surface Treatment	4-14-1	
15	Cold Mix for Winter Patching	4-15-1	Rev 2019 (1)
16	Micro-surfacing - (EPWS)	4-16-1	Rev 2019 (1)
17	Concrete Pavement	4-17-1	Rev 2019 (1)
18	Roller Compacted Concrete - (WS)	4-18-1	Rev 2019 (2)
19	Asphalt Concrete End Product Specification (EPS)	4-19-1	Rev 2019 (1)
20	Partial Depth Reclamation with Emulsified Asphalt Stabilization (MS)	4-20-1	New 2019
21	Partial Depth Reclamation with Expanded Asphalt Mix (MS)	4-21-1	New 2019
22	Full Depth Reclamation with Expanded Asphalt Mix (MS)	4-22-1	New 2019
23	Full Depth Reclamation with Portland Cement (MS)	4-23-1	New 2019

DIVISION 5 - STRUCTURES

SECTION		PAGE	
1	Piles	5-1-1	Rev 2019 (2)
2	Timber Structures	5-2-1	Rev 2019 (2)
3	Structural Steel	5-3-1	Rev 2019 (1)
4	Miscellaneous Metal	5-4-1	
5	Reinforcing	5-5-1	Rev 2019 (2)
6	Steel Guard Rail Systems and Wooden Guide Posts	5-6-1	Rev 2019 (2)
7	Cast In Place Concrete	5-7-1	Rev 2019 (2)
8	Precast Portland Cement Concrete, Reinforced and Prestressed	5-8-1	Rev 2008
9	Waterproofing Concrete Bridge Decks	5-9-1	Rev 2019 (1)
10	Corrugated Structural Plate Pipe Structures	5-10-1	New 2014
11	Metal Traffic Barriers and Metal Railings for Structures	5-11-1	Rev 2011
12	Underground Drainage Systems	5-12-1	Rev 2019 (2)
13	Concrete Restoration - Bridge Structures	5-13-1	Rev 2014
14	Inextensible Mechanically Stabilized Earth Structures - (WS)	5-14-1	Rev 2011
15	Asphaltic Plug Joints	5-15-1	Rev 2010
16	Shotcrete - Wet and Dry Process	5-16-1	Rev 2014
17	Coatings for Steel Structures	5-17-1	Rev 2019 (2)
18	Cast In Place - High Performance Concrete (HPC)	5-18-1	Rev 2019 (2)
19	Elastomeric Bearings	5-19-1	Rev 2011

DIVISION 6 - MISCELLANEOUS

SECTION		PAGE	
1	Traffic Control Persons	6-1-1	Deleted 2008
2	Flashing Light Units	6-2-1	Deleted 2008
3	Chain Link Fence	6-3-1	Rev 2019 (2)
4	Right-Of-Way-Fence	6-4-1	Rev 2019 (2)
5	Removal of Existing Sidewalks, Driveways and Curbs	6-5-1	
6	Non-Coning Traffic Paint	6-6-1	Rev 2019 (2)
7	Calcium Chloride Water Solution	6-7-1	
8	Calcium Chloride	6-8-1	Rev 2019 (2)
9	Sodium Chloride	6-9-1	Rev 2019 (2)
10	Winter Sand	6-10-1	Rev 2019 (2)
11	Magnesium Chloride	6-11-1	Rev 2019 (2)
12	Geotextile	6-12-1	Rev 2019 (2)
13	Mobilization	6-13-1	Rev 2019 (2)

DIVISION 7 - ENVIRONMENTAL PROTECTION

SECTION		PAGE	
1	Sediment Barriers	7-1-1	Rev 2014
2	Flow Checks	7-2-1	Rev 2009
3	Settlement Ponds	7-3-1	Rev 2004
4	Maintenance and Sediment Control	7-4-1	
5	Hydroseeding	7-5-1	Rev 2004
6	Dry Mulching	7-6-1	Rev 2004
7	Erosion Control Blankets	7-7-1	Rev 2011
8	Topsoil	7-8-1	Rev 2011
9	Water Control For Bridge Foundations	7-9-1	
10	Turbidity Curtain	7-10-1	Rev 2011
11	Water Control at Culvert Extensions or Installations	7-11-1	
12	Dewatering With Filter Bags	7-12-1	
13	Sodding	7-13-1	
14	Lime	7-14-1	Rev 2004

DIVISION 8 - STANDARD DRAWINGS

DRAWING		PAGE	
	General	8-1	New 2019
B-2007-144	Timber Bridge Barrier LVPL1	8-2	Rev 2007
B-2007-145	Timber Bridge Barrier LVPL2	8-3	Rev 2007
B-2007-146	Timber Bridge Barrier PL1	8-4	Rev 2007
HS519	Guard Rail Post Details	8-5	Rev 1997
S-2006-017	Installation of Barbed Wire for Chain Link Fences	8-6	Rev 2006
S-2006-025	Asphalt Concrete Curb	8-7	Rev 2006
S-2009-002	Construction/Reconstruction 3R, Maintenance Guidelines	8-8	Rev 2013
S-2009-005	Standard Corridor Freeway & Major Arterial	8-10	Rev 2009
S-2009-013	Transverse Asphalt Concrete Key Joint	8-11	Rev 2009
S-2009-014	Sidewalk Details	8-12	Rev 2018
S-2009-015	Asphalt Shoulder Widening Freeways and Arterials	8-13	Rev 2009
S-2009-016	Benching of Embankment Slopes	8-14	Rev 2009
S-2009-017	Standard Cross Section Service Road	8-15	Rev 2009
S-2009-018	Swamp Treatment Under Embankments	8-16	Rev 2009
S-2009-019	Curb Type A, B & C	8-17	Rev 2012
S-2009-020	Semi-Mountable Curb Type B1	8-18	Rev 2009
S-2009-021	Curb Type D, E & F	8-19	Rev 2009
S-2009-022	Jersey Barrier	8-20	Rev 2014
S-2009-023	Asphalt Concrete Gutter	8-21	Rev 2009
S-2009-024	Fence for Miscellaneous Roadway Installation	8-22	Rev 2009
S-2009-025	Right-of-Way Fence	8-23	Rev 2009
S-2009-026	Security Fence	8-24	Rev 2009
S-2009-028	Asphalt Tapered Edge Detail	8-25	Rev 2009
S-2009-030	Acceleration-Deceleration Lane for Ramp Terminals	8-26	Rev 2014
S-2009-032	Driveway Entrance	8-27	Rev 2009
S-2009-033	Cul-de-Sac	8-28	Rev 2009
S-2009-034	Community Mailbox Roadside Treatment – Paved Roads	8-29	Rev 2009
S-2009-035	'T' Intersection School Bus or WB-12 Design Vehicle	8-30	Rev 2009
S-2009-036	Channelized 'T' Intersection WB-21 Design Vehicle	8-31	Rev 2009
S-2009-037	'T' Intersection WB-21 Design Vehicle	8-32	Rev 2014
S-2009-038	'Four-Leg' Intersection School Bus or WB-12 Design Vehicle	8-33	Rev 2009
S-2009-039	Channelized 'Four-Leg' Intersection WB-21 Design Vehicle	8-34	Rev 2009
S-2009-040	'Four-Leg" Intersection WB-21 Design Vehicle	8-35	Rev 2009
S-2009-041	Temporary Detour Future Twinning	8-36	Rev 2009
S-2009-044	Appendix "A" Continuous Centre Line Rumble Strips	8-37	Rev 2014
S-2009-051	Bedding for Concrete Pipe	8-38	Rev 2009
S-2009-052	Typical 600 or 750 mm Diameter Catch Basin and Grating	8-39	Rev 2009
S-2009-054	Typical 900 mm Diameter Catch Basin	8-40	Rev 2009
S-2009-055	Typical 1050 mm Diameter Catch Basin	8-41	Rev 2009
S-2009-056	Typical 1200 to 2400 mm Diameter Catch Basin	8-42	Rev 2009
S-2009-057	R361 and R371 Grating	8-43	Rev 2009
S-2009-058	S 401 Frame and Grating	8-44	Rev 2009
S-2009-059	S 361 Catch Basin Frame, Grating & Curb	8-45	Rev 2009
S-2009-060	Cast In Place Catch Basin	8-46	Rev 2009
S-2009-061	Cast In Place Median Catch Basin & Grating	8-47	Rev 2009
S-2009-062	Depressed Gutter at Catch Basins	8-48	Rev 2009
S-2009-063	Pipe Grates	8-49	Rev 2009
S-2009-071	Guard Rail and Post Details	8-50	Rev 2015
S-2009-072	Steel Beam Guard Rail End Treatment	8-51	Rev 2012
S-2009-073	Roadside Barrier at Concrete Bridge Approach	8-52	Rev 2015
S-2009-074	Michigan Shoe Detail	8-53	Rev 2015
S-2009-075	Guardrail Channel Detail	8-54	Rev 2009
S-2009-076	Guardrail Mitigation of Roadside Hazards	8-55	Rev 2009
S-2009-077	Double Cable Guardrail	8-56	Rev 2009
S-2009-078	Guardrail Anchor Base on Concrete	8-57	Rev 2009
S-2009-132	Sediment Control Fence for Sheet Flow	8-58	Rev 2011

DRAWING		PAGE	
S-2009-132-A	Sediment Control Fence for Sheet Flow Type 2	8-59	New 2011
S-2009-133	Berm Barrier	8-60	Rev 2009
S-2009-134	Straw Bale Barrier for Sheet Flow	8-61	Rev 2009
S-2009-135	Sandbag Barrier for Sheet Flow	8-62	Rev 2009
S-2009-136	Sandbag Flow Checks	8-63	Rev 2009
S-2009-137	Turbidity Curtain - Seam Detail	8-64	Rev 2009
S-2009-138	Rock Flow Checks	8-65	Rev 2009
S-2009-139	Settlement Ponds	8-66	Rev 2009
S-2009-140	Turbidity Curtain	8-67	Rev 2011
S-2009-141	Enhanced Energy Dissipation Pools	8-68	Rev 2009
S-2009-142	Foundation Excavation for Built-in-Place Structures	8-69	Rev 2009
S-2009-143	Paving Approach to Bridges on 100 Series Highways	8-70	Rev 2009
S-2009-144	Foundation Excavation Limits for Culverts	8-71	Rev 2009
S-2011-027	Truck Over-Run for Roundabouts	8-72	Rev 2011
S-2011-031	Median Crossover	8-73	Rev 2017
S-2011-091	Curbed Island Detail with Traffic Signals	8-74	Rev 2011
S-2011-094	Trenching Details for Electrical Conduit	8-75	Rev 2011
S-2011-095	Junction Box Details Traffic Signals	8-76	Rev 2011
S-2011-200	Paved Shoulder Width for Active Transportation	8-77	Rev 2018
S-2011-201	Walking and Non Motorized Multi-Use Trail Treatments	8-78	Rev 2011
S-2011-302	Wood Sign Structure Assembly Details	8-79	Rev 2019
S-2011-303	Wood Sign Structure Post Spacing Chart	8-80	Rev 2019
S-2011-304	Aluminum Sign Structure Alignment Details	8-81	Rev 2019
S-2011-305	Aluminum Sign Structure Panel Assembly Details	8-82	Rev 2019
S-2011-306	Aluminum Sign Structure Foundation Details	8-83	Rev 2019
S-2011-307	Aluminum Sign Structure Overlay Screw Spacing	8-84	Rev 2019
S-2013-300	Patterns of Lines	8-85	Rev 2014
S-2013-301	Directional Arrow Symbols	8-86	Rev 2013
S-2013-308	Pre-Marking	8-87	Rev 2014
S-2013-309	Acceleration/Deceleration Lanes on 100 Series Highways	8-88	Rev 2013
S-2013-311-1	Aerial Speed Surveillance Markings	8-89	Rev 2013
S-2013-311-2	Aerial Speed Surveillance Markings Details	8-90	Rev 2013
S-2013-312	Railway Crossings	8-91	Rev 2013
S-2013-313-1	Straight Transition from Two Lane Two Way to Four Lane Divided 100 Series Highway	8-92	Rev 2016
S-2013-313-2	Curved or Tapered Transition from Two Lane Two Way to Four Lane Divided 100 Series Highway	8-93	Rev 2016
S-2013-320	Diamond Interchange without Islands at Ramp Terminals	8-94	Rev 2013
S-2013-321	Diamond Interchange with Islands at Ramp Terminals	8-95	Rev 2013
S-2013-322	Parclo Interchange without Islands at Ramp Terminals	8-96	Rev 2013
S-2013-323	Parclo Interchange with Islands at Ramp Terminals	8-97	Rev 2013
S-2013-324	Trumpet Interchange	8-98	Rev 2013
S-2013-325	Interchange with Roundabout Ramp Terminals	8-99	Rev 2014
S-2013-326	Stop Sign with Flashing Beacon	8-100	Rev 2019
S-2014-029	Standard Cross Section Freeway Cable Barrier Median (A)	8-101	Rev 2014
S-2014-081	Timber Bridge and Steel Truss Bridge Approach Guardrail	8-102	Rev 2014
S-2014-327	Traffic Control at Highway Entrance Ramps on 100 Series Highways Figure 1 Short Parallel Lane	8-103	Rev 2014
S-2014-328	Traffic Control at Highway Entrance Ramps on 100 Series Highways Figure 2 Standard Parallel Lane	8-104	Rev 2014
S-2014-329	Traffic Control at Highway Entrance Ramps on 100 Series Highways Figure 3 Long Parallel Lane	8-105	Rev 2014
S-2014-330	Traffic Control at Highway Entrance Ramps on 100 Series Highways Figure 4 Continuous Entry-Ext Ramp	8-106	Rev 2014
S-2014-331	Traffic Control at Highway Entrance Ramps on 100 Series Highways Figure 5 Cloverleaf Interchange	8-107	Rev 2014
S-2015-001	Highway Design Guidelines	8-108	Rev 2015
S-2015-003	Standard Cross Section Freeway Open Median (A)	8-109	Rev 2019
S-2015-004	Standard Cross Section Freeway Jersey Barrier Median (A)	8-110	Rev 2015

DRAWING		PAGE	
S-2015-006	Standard Cross Section Major Arterial (B).....	8-111	Rev 2015
S-2015-007	Standard Cross Section Major Collector (E).....	8-112	Rev 2015
S-2015-008	Standard Cross Section Minor Collector (F).....	8-113	Rev 2015
S-2015-009	Standard Cross Section Local Type (G).....	8-114	Rev 2015
S-2015-010	Standard Cross Section Local Type (H) (I) (J).....	8-115	New 2015
S-2015-011	Standard Cross Section Truck Route Type (M) (N).....	8-116	New 2015
S-2015-012	Standard Cross Section Ramp.....	8-117	New 2015
S-2015-042	Appendix “B” Continuous Shoulder Rumble Strips.....	8-118	New 2015
S-2015-043	Standard Cross Section Minor Arterial Type (C) (D).....	8-119	New 2015
S-2015-310	Typical Climbing Lanes.....	8-120	Rev 2016
S-2016-092	Controller Foundation and Electrical Service Detail - Traffic Signals.....	8-121	New 2016
S-2016-093	Foundation and Pull Pit Detail Traffic Signals Aluminum Pole.....	8-122	New 2016
S-2016-096	Controller Foundation and Electrical Service Detail - Traffic Signals with Highway Lighting.....	8-123	New 2016
S-2016-097	Median Flashing Light Bouncing Ball.....	8-124	New 2016
S-2016-098	Median Flashing Light on Barrier Bouncing Ball.....	8-125	New 2016
S-2016-111	Foundation and Anchor Detail Highway Lighting.....	8-126	New 2016
S-2016-113	Pole Wiring Details Highway Lighting.....	8-127	New 2016
S-2016-115	Type B Service – 240 Volt Highway Lighting.....	8-128	New 2016
S-2016-116	Type C Service – 347 Volt Single Phase Highway Lighting.....	8-129	New 2016
S-2016-117	Type A Service with Relay 120 Volt Highway Lighting.....	8-130	New 2016
S-2016-118	Type A Service with Double Relay 120/240 Volt Highway Lighting.....	8-131	New 2016
S-2017-019	Typical Gravel Road Cross Section.....	8-132	New 2017
S-2017-332	Signage at Median Crossovers.....	8-133	New 2017
S-2017-333	Do Not Cross Median Signing.....	8-134	New 2017
S-2018-315	Distance Markers.....	8-135	New 2018
S-2018-334	T Intersection.....	8-136	New 2018
S-2018-335	T Intersection with Left Turn Lanes.....	8-137	New 2018
S-2018-336	T Intersection with Right Turn Lane.....	8-138	New 2018
S-2018-337	T Intersection with Islands.....	8-139	New 2018
S-2018-338	T Intersection with Islands and Left Turn Lanes.....	8-140	New 2018
S-2018-339	T Intersection with Islands and Right Turn Lanes.....	8-141	New 2018
S-2018-340	Intersection.....	8-142	New 2018
S-2018-341	Intersection with Left Turn Lanes.....	8-143	New 2018
S-2018-342	Intersection with Right Turn Lanes.....	8-144	New 2018
S-2018-343	Intersection with Islands.....	8-145	New 2018
S-2018-344	Intersection with Islands and Left Turn Lanes.....	8-146	New 2018
S-2018-345	Intersection with Islands and Right Turn Lanes.....	8-147	New 2018
S-2018-346	Hatch Marking Details.....	8-148	New 2018
S-2018-348	Wrong Way Signage Divided Highway.....	8-149	New 2018
S-2019-084	R-10 Adjustable Manhole Frame and Cover.....	8-150	New 2019
S-2019-112	Pull Station Details Highway Lighting.....	8-151	New 2019
S-2019-114	Type A Service – 120 Volt Highway Lighting.....	8-152	New 2019
S-2019-314	For No-Turn Intersection on 100 Series Highway.....	8-153	New 2019

APPENDIX A - FORMS

FORM	PAGE	
Tender Form	A-1	Rev 2009
Acknowledgement of Tender Content	A-44	Rev 2014
Release of Security Deposit Form	A-47	
Statement of Asphalt Cement - Liquid Asphalt Primer & Emulsified Asphalt	A-32	Deleted 2006
Release From All Liabilities	A-48	
Engineer's Certificate of Final Estimate	A-50	Rev 2009
Modification of Tender	A-51	Rev 2005
Construction Safety Certification Certificate	A-52	Rev 2005
Certificate of Recognition Program	A-53	
Bid Bond	A-55	Rev 2011
Payment Bond	A-58	Rev 2011
Performance Bond	A-63	Rev 2011
Contract Maintenance Bond	A-67	Rev 2011
Statutory Declaration	A-70	New 2006
Surety's Agreement to Bond	A-71	New 2006
Certificate of Substantial Performance	A72	Rev 2008
Surplus Excavated Material Release	A-73	Rev 2008

APPENDIX B - GUIDELINES AND REGULATIONS

FORM	PAGE	
Asphalt Plant Guidelines (1981)	B-1	
Pit and Quarry Guidelines (1999)	B-7	Rev 2001
Watercourse Alterations Specifications (1997)	B-15	Rev 2000
Guidelines for the Application & Removal of Structural Steel Protective Coatings	B-40	New 2003
Pit and Quarry Requirements	B-47	New 2011

APPENDIX C - STANDARD RATES

FORM	PAGE	
80-20 Rule	C-1	Rev 2019 (1)
Overhaul Rates	C-2	Rev 2019 (1)
Gravel in Stockpile	C-2	Rev 2019 (1)
Pilot Vehicle	C-2	Rev 2019 (1)
Cold Weather Concrete	C-2	Rev 2019 (1)
Cubic Metre Kilometre Rates	C-4	Rev 2019 (1)
Tonne Kilometre Rates – Gravel	C-5	Rev 2019 (1)
Tonne Kilometre Rates – Asphalt	C-8	Rev 2019 (1)
Hourly Rate	C-11	Rev 2019 (1)
Truck Rates - Service Trucks	C-11	Rev 2019 (1)

APPENDIX D - VALUE ENGINEERING ALTERNATE (VEA)

APPENDIX E - GLOSSARY OF TERMS - Rev 2008

APPENDIX F - SMOOTHNESS TESTING & REMEDIAL MEASURES - Rev 2014

APPENDIX G - SAFETY DOCUMENT SUBMISSION - Rev 2008

APPENDIX H - SMOOTHNESS SPECIFICATION - Rev 2019 (2)

SECTION 1 - DEFINITION OF TERMS

When in any part of the Contract, the following words or expressions or pronouns used in their stead are used, the intent and meaning shall be interpreted as follows:

ADDENDUM. A supplement to the Tender Forms as originally issued or printed, covering additions, corrections or changes in the bidding conditions for the advertised work, that may be issued by the Department to prospective Bidders prior to the Bid Closing Time.

ADDITIONAL WORK. Additional work means any work or service, which is beyond the scope of the work contemplated by the Contract Documents.

BIDDER. Any individual, firm or corporation submitting a bid for the work contemplated.

BID. An offer submitted in response to an invitation to bid.

BID CLOSING TIME. The time up to which bids will be accepted and beyond which bids will be rejected.

BIDDING PERIOD. A time provided to prospective Bidders to assemble and submit their Bid. Further defined as the time period between the Invitation to Bid and the Bid Closing Time.

BID SECURITY. A promise to pay to the contracting authority its costs of accepting another Bid, up to a specified limit, if the Bidder is awarded the Bid and fails to enter into the required Contract.

CERTIFICATE OF FINAL ESTIMATE. A report to the Minister by the Engineer that the Contractor has completed the work and a recommendation that the Final Estimate be paid.

CERTIFICATE OF RECOGNITION. An example of an accredited certificate issued by the Nova Scotia Construction Association which has been accredited by the Worker's Compensation Board of Nova Scotia (WCB). This certification is awarded to firms that have completed the training requirements, fully implemented a loss control program and successfully participated in the audit process.

CITY. The incorporated City in which the work is being carried out.

COMPETENT BID. The low responsive Bid submitted by a responsible Contractor or Supplier is deemed to be the lowest competent bid.

CONTRACT. The Agreement covering the performance of the work and the furnishing of materials in the construction of same, which shall include the advertisement, the instructions to Bidders, the Proposal, the Province of Nova Scotia Department of Transportation and Public Works Standard Specifications - Highway Construction and Maintenance dated February 1, 1997, Special Provisions, the Specific Agreement, Release from All Liabilities and any Supplemental agreements and all plans pertaining to the work.

CONTRACTOR. The Party of the First Part to the Contract acting directly or through their agents or employees and who is primarily liable for the acceptable performance of the work for which they have contracted and also for the payment of all legal debts pertaining to the work.

In order to avoid cumbersome and confusing repetition of expressions in this Contract, whenever it is provided that anything is, or is to be, or to be done, if, or as, or when, or where, "contemplated", "required", "directed", "deemed necessary", "permitted", "suspected", "approved", "acceptable", "unacceptable", "suitable", "unsuitable", "satisfactory", "unsatisfactory", or "sufficient", such expressions shall have the same force as if followed by the words "by the Engineer" or "to the Engineer" as the case may be.

COUNTY. The County in which the work is being carried out.

DEPARTMENT, TIR, NSTIR AND DEPARTMENT OF TRANSPORTATION AND INFRASTRUCTURE RENEWAL. The Department of Transportation and Infrastructure Renewal of the Province of Nova Scotia.

DEPUTY MINISTER. The Deputy Minister of Transportation and Infrastructure Renewal of the Province of Nova Scotia.

ELECTRONIC BID. A bid submitted on a Contract Proposal electronically utilizing the Bid Express electronic bidding services.

ENGINEER. The Chief Engineer of the Department of Transportation and Infrastructure Renewal acting directly or through an assistant or representatives, duly authorized by the Chief Engineer, and only within the scope of the particular duties assigned to them or within the scope of the authority vested in them.

EXTRA WORK. Any material, work or service, the performance of which is beyond the scope of the Contract and for which no quantity and/or price was included in the Contract, which is determined by the Engineer to be necessary or desirable to complete the Contract.

HIGHWAY CONSTRUCTION SERVICES. The office building where the Manager of Highway Construction Services is located. The address is 107 Perrin Drive, “Building B”, Fall River, Nova Scotia, B2T 1J6.

HIGHWAYS. The whole right-of-way which is reserved for use in constructing the roadway and its appurtenances.

INSPECTOR. The authorized assistant to the Engineer assigned to make inspection of work performed or being performed and materials furnished or being furnished.

IRREVOCABLE STANDBY LETTER OF CREDIT. A written document issued by a Canadian Chartered Bank in a form satisfactory to the Department and used as a security deposit for the contract. The letter of credit shall be unconditional and subject to the uniform customs and practices for documentary credits (1993 Revision) International Chamber of Commerce (Publication No. 500). The bank issuing the letter of credit is obligated to make payment provided the beneficiary (Department) produces a sight draft and a written demand for payment.

LETTING. The receipt, opening, tabulation and determination of the apparent low Bidder.

LIQUIDATED DAMAGES. Charges assessed against the Contractor by the Department because of failure of the Contractor to complete the Contract within the Contract time or by the Contract completion date and/or charges assessed against the Contractor by the Department because of failure of the Contractor to commence or complete a particular operation or component of the work within a specified time frame.

MATERIALS. Any substances specified for use in the construction of the Project(s) and its appurtenances.

MINISTER. The Honourable Minister of Transportation and Infrastructure Renewal of the Province of Nova Scotia.

MUNICIPALITY. The County or District, under the jurisdiction of a Municipal council, in which the work is being carried out.

PLANS. Any Official Plans, profiles, typical cross-sections, working drawings, supplemental Drawings, or exact reproductions thereof, approved by the Engineer, which show the location, character, dimensions and details of the work to be done, and which are to be considered as a part of the Contract.

PROJECT. A specific section of the highway, the location, or the type of work together with all appurtenances and construction to be performed under the Contract.

PROVINCE. The Province of Nova Scotia.

QUALITY ASSURANCE (QA). All those planned and systematic actions required by the Owner or Owner’s representative to provide adequate confidence that a product or service will satisfy given requirements for quality. In contractual situations, QA serves to provide confidence in the Contractor and/or Supplier.

QUALITY CONTROL (QC). The sum total of activities performed by the Seller (producer, manufacturer, and/or Contractor) to make sure that a product meets Contract specification requirements. Within the context of highway construction this includes materials, handling and construction procedures, calibration and maintenance of equipment, production process control, and any sampling, testing and inspection that is done for these purposes.

ROADBED. That portion of the roadway extending from shoulder line to shoulder line, in other words, the sub-grade and shoulders considered as a unit.

ROADWAY. The portion of the highway included between the outside lines of gutters, or side ditches, including all the appertaining structures, and all slopes, ditches, channels, waterways, etc., necessary for proper drainage and protection.

SCHEDULE OF WORK. The Schedule of Work is defined as a schematic representation of the length of time required

to complete individual items of work, and how it relates to other items of work in the Contract, all in accordance with the completion date(s) of the Contract.

SECURITY DEPOSIT. The Security designated in the Tender to be furnished by the Bidder as a guaranty of good faith to enter into a Contract with the Department and also covering the performance of the work and warranty period if the work contemplated is awarded to said Bidder. Said Security shall be retained by the Department as a guaranty of good faith and ability on the part of the Contractor to execute the work in accordance with the terms of the Contract.

SHOULDER. The portion of the roadway adjacent with the travelled way for accommodation of stopped vehicles, for emergency use and for lateral support of base and surface courses.

SPECIAL PROVISIONS. Additions and/or revisions to the Standard Specifications applicable to an individual Contract.

SPECIFICATIONS. The directions, provisions, and requirements described in the Province of Nova Scotia Department of Transportation and Public Works Standard Specifications dated February 1, 1997, supplemented by such Special Provisions as may be necessary, pertaining to the method and manner of performing the work, or to quantities of materials to be furnished under the Contract.

SUBSTANTIAL PERFORMANCE. A Contract is deemed to be substantially performed when the work or improvement is ready for use or is being used for the purpose intended and when the work to be done under the contract is capable of completion or correction at a cost of not more than two and one-half percent of the Contract price.

SUPPLEMENTAL AGREEMENTS. Written agreements executed by the Contractor, and by the Engineer, covering alterations necessary to the Contract as hereinafter provided.

PROPOSAL (TENDER). The offer of the Bidder for the work when made out and submitted on the prescribed Tender Form or Electronic Bid properly signed and guaranteed.

TENDER FORM. All approved forms on which the Department requires formal Bids to be prepared and submitted for the work as detailed in the specifications.

TOWN. The incorporated Town in which the work is being carried out.

THE WORK. The furnishing of products, material, labour, equipment and other incidentals necessary or convenient to successful Contract completion, plus the fulfilment of all duties and obligations required and imposed by the Contract.

TRAFFIC CONTROL MANUAL. The latest version of the Nova Scotia Temporary Workplace Traffic Control Manual.

TRANSPORTATION AND INFRASTRUCTURE RENEWAL. Transportation and Public Works as stated throughout this document will now mean Transportation and Infrastructure Renewal.

UNBALANCED BID. An unbalanced bid shall include, without limitation, a Tender which contains one or more unit prices which do not fairly represent reasonable and proper compensation for the unit of work bid. The Minister may use other Tenders submitted in response to this invitation to Tender, or Tender Submissions for like or similar work, as guidelines in determining if a Bid is unbalanced.

UNFORESEEN WORK. Unforeseen work is work that cannot be covered by any of the various items or combination of items for which there is a bid price. The Engineer may require the Contractor to furnish material and do work not provided for in the Tender as may be found necessary or pertinent for the proper completion of the work embraced in the Contract.

VALUE ENGINEERING ALTERNATE (VEA). An alternate design or modification(s) to a tendered design where a construction cost saving in excess of $50,000 can be achieved, without compromising the integrity and quality of the project, prepared and submitted as detailed in the specifications.

WCB SAFETY CERTIFIED. Workers' Compensation Board of Nova Scotia is the body that is empowered to accredit companies to perform health and safety management system audits. Accredited companies may conduct WCB Safety Certified Audits. All Contractors and Subcontractors shall be WCB Safety Certified. The Nova Scotia Construction Safety Association's Certificate of Recognition is an example of an accredited certification (WCB Safety Certified).

SECTION 2 - INSTRUCTIONS TO BIDDERS - PAPER BIDDING

1.0 CONTENTS OF TENDER. The Bidder will be furnished by the Department with a Tender Form (See Appendix A) which will state the location and direction of The Work to be constructed, and which will show the approximate estimate of the various quantities of The Work to be performed and materials to be furnished. The time frame and date on which The Work shall be completed are provided on the Tender Signature Form and in the Special Provisions. All papers bound with or attached to the Tender Forms are a necessary part thereof and shall not be detached. The Department does not require that Special Provisions be returned with the Tender.

2.0 INTERPRETATION OF APPROXIMATE ESTIMATE OF QUANTITIES. The Bidder's attention is called to the fact that the estimate of the quantities of work to be done and materials to be furnished under these specifications as shown on the Tender Form are approximate, and are given only as a basis of calculation upon which the award of the Contract is to be made. The Department does not assume any responsibility that the quantities shall obtain strictly in The Work nor shall the Contractor plead misunderstanding or deception because of such estimate of quantities or of the character, location or other conditions pertaining thereto. The Department reserves the right to increase, decrease or omit all or any of the quantities of work shown in the Tender Form, if the Department may deem it necessary.

3.0 EXAMINATION OF PLANS, SPECIFICATIONS, TENDER QUANTITIES AND SITE OF THE WORK. Bidders shall carefully examine the Instructions to Bidders, Plans, Tender quantities, Specifications, Special Provisions and site of the proposed work in order to satisfy themselves by examination as to all local conditions affecting the Contract and as to the detailed requirements of construction. Bidders upon receipt of the tender documents are responsible for verifying that the documents are complete, and the Bidder shall notify the Department, prior to Bid Closing Time, should the documents be incomplete or upon finding errors or omissions, including Tender quantities, in the Tender documents.

4.0 PREPARATION OF TENDER

4.1 Tender Forms. The Bidder shall submit their Tender on the forms furnished by the Department. The blank spaces in the Tender Forms shall be filled in correctly, where indicated, for each and every item for which a quantity is given, and the Bidder shall state the prices (both in words and numerals) for which they propose to do each item of The Work contemplated.

4.2 Addenda. Bidders shall acknowledge, as part of their Tender submission, all Addenda issued during the Bidding Period by the Department covering additions, corrections and/or changes in the bidding conditions for the advertised work. The Bidder shall make all revisions to the Tender documents as instructed in the aforementioned addenda.

It is not necessary to return the Special Provisions or Addenda, however, the Tender submission shall include a properly completed and signed "Tender Signature Form", whereby Bidders acknowledge receipt, understanding and agreement with the Special Provisions and Addenda. A blank copy of this form will be provided with the Tender package.

When an Addendum is issued, the Bid Closing Time shall, where necessary, be adjusted to reasonably allow Bidders to receive the Addendum and adequately consider, prepare and submit their bids, taking into account the impact of the Addendum.

4.3 Additional Documents. Where instructed in these Specifications and the Special Provisions, the Bidder shall submit any and all additional certificates, supplements, letters, plans and other information with their Tender submission. They shall be attached to the Tender Forms and signed as directed.

5.0 POST BID SUBMISSIONS. To be eligible to be awarded any Department highway construction or maintenance Contract to which these specifications apply, the Bidder must provide within forty-eight (48) hours of request the following submissions: proof of WCB Safety Certification (such as a Certificate of Recognition or Letter of Good Standing issued by a company accredited by the Workers' Compensation Board of Nova Scotia such as the Nova Scotia Construction Safety Association), or a valid letter from an occupational health and safety organization accredited by WCB indicating that the Contractor is in the process of qualifying for WCB Safety Accreditation. An example of a letter is included in Appendix 'A' of these specifications.

The Bidder shall provide within forty-eight (48) hours of request, evidence of an account with the Workers' Compensation Board of Nova Scotia, coverage under the Workers' Compensation Act, revised statutes of Nova Scotia and a Clearance Certificate indicating that the Bidder is in good standing.

6.0 TAXES

6.1 Harmonized Sales Tax. The Province is not exempt for Harmonized Sales Tax (HST) purposes. As a result, the aggregate amount of Tender Contracts are subject to HST, however, prices submitted shall not include HST.

The HST payable by the Department will be added as a separate item during Department processing of progress payments and, therefore, HST will not appear as a cost in the aggregate amount of Tender.

Bidders are advised that they are eligible to claim an Input Tax Credit (ITC) for a portion of the HST paid in relation to the Contract to the requirements of the Government of Canada.

7.0 RECEIVING TENDERS. As instructed by Internal Services Division (ISD) Procurement.

8.0 COMPETENCY OF BIDDERS. The Bidder shall be capable of performing the various items of work Bid upon. They may be required to furnish to the Department a statement covering experience on similar work, lists of machinery, plant, and other equipment available for the proposed work and such statements of their financial resources as may be deemed necessary.

9.0 REJECTION OF TENDER. The right to reject any or all Tenders is reserved by the Minister and the lowest or any Tender will not of necessity be accepted.

The Department reserves the right to consider, during the evaluation of Tenders:

i. the Department's past experience with the Bidder and/or its management;
ii. information provided in response to enquiries of credit and industry references;
iii. information received in response to enquiries made by the Department of third parties apart from those disclosed in the tender in relation to the reputation, reliability, experience and capabilities of the Bidder;
iv. the manner in which the Bidder provides services to others; and
v. the experience and qualification of the Bidder's senior management and project management.

The Department may, in its sole discretion, reject any Bid which does not fully satisfy the above considerations to its satisfaction.

Tenders will be also be rejected if they show any omissions, alterations of forms, additions not called for, conditional or alternate bids, or irregularities of any kind or if they contain a clause in which the Bidders reserve the right to accept or reject a Contract awarded to them. Tenders in which the prices are obviously unbalanced may be rejected.

10.0 BID SECURITY. Tenders will be rejected unless accompanied by Bid Security of not less than ten percent (10%) of the Contract price (including all valid bid modifications). This deposit shall consist of a Certified Cheque, Irrevocable Standby Letter of Credit, Bank Draft, Money Order, or Bid Bond on a TIR Province of Nova Scotia Form acceptable to the Minister.

Where TIR Province of Nova Scotia Forms are permitted for Bid Security or performance assurance, the Minister will accept bonds on the surety company's letterhead, providing the wording and punctuation are identical to the wording on the original TIR Province of Nova Scotia Form. The Minister will also accept Bid Bonds on the CCDC Bid Bond Form, latest version.

Security shall be made payable to the Department of Transportation and Infrastructure Renewal, Province of Nova Scotia, drawn upon a Canadian Chartered Bank and marked accepted by the financial institution upon which it is drawn. It will be forfeited to the Department if the Bidder neglects or refuses to enter into a Contract when called upon to do so, or if, after entering into a Contract, they fail to proceed with and complete The Work satisfactorily according to the terms of the Contract. Bid Security of unsuccessful Bidders will be returned to them after the Contract has been signed, or previous to that time, at the discretion of the Minister.

Bid Bonds submitted as security shall be signed and sealed by the Contractor and Surety and shall be with an established Surety Company satisfactory to and approved by the Minister. Where a Bid Bond is submitted as Bid Security, the Bidder shall also include a properly endorsed "Surety's Agreement To Bond", specific to the Contract. A sample "Surety's Agreement To Bond" is included in Appendix "A" of these Standard Specifications.

11.0 DELIVERY OF TENDER. As instructed by ISD Procurement.

12.0 MODIFICATION OF TENDER. If the Contractor wishes to make a change(s) to their Bid, these changes shall be received by the ISD Procurement prior to the posted Bid Closing Time, subject to its acceptance. All changes shall be shown on the Form entitled "Modification of Tender". A sample form is shown in Appendix "A" of these Standard Specifications. All applicable fields on the form shall be complete, including the Modification.

Modifications of Tender will be considered only if they are properly completed and include all necessary information requested on the form. Modifications deemed invalid will be not be considered when determining the aggregate amount of Tender (Contract price). The difference in the change of the unit price for all Items shall also be shown. All changes in unit prices shall be written in ink, both in words and numerals.

13.0 WITHDRAWAL OF TENDER. A Bidder will be permitted to withdraw their Tender unopened after it has been deposited if such request is received in writing prior to the Bid Closing Time.

14.0 DISQUALIFICATION OF TENDER. More than one Tender from an individual firm, partnership, corporation or association under the same or different names will not be considered. Collusion between Bidders will be sufficient cause for the rejection of all Bids so affected.

15.0 MATERIAL GUARANTY. Before any Contract is awarded the Bidder may be required to furnish a complete statement of the origin, composition and manufacture of any or all materials to be used in the construction of The Work included in the Contract together with samples, which samples may be subjected to any and all tests required by the Department to determine their quality and fitness for The Work.

16.0 VALUE ENGINEERING ALTERNATE (VEA). A Value Engineering Alternate will be entertained on selected Department Contracts. Such Contracts will be noted in the Special Provisions of said Contract.

A VEA will not be considered when awarding the Tender. Award of the Tender will be based solely on the original Tender proposal and design. The VEA may be accepted or rejected by the Department at its sole discretion. The proposing of any design does not place the Department under any obligation to accept the design. Net construction savings will be shared equally between the Contractor and the Department. Minimum overall savings will be identified, confirmed and fixed prior to the Department giving approval to a VEA. All other terms and conditions will be as specified in the Department's VEA policy contained in Appendix 'D' of these specifications.

17.0 PROCEDURES FOR TENDER OPENINGS AND EVALUATIONS

17.1 Tender Opening. A preliminary check will be conducted at the Tender opening to ensure the following information has been included.

- **Security Deposit.** Each Tender is reviewed to ensure that a Security Deposit accompanies the Tender.

- **Aggregate Amount of Tender (Contract Price).** Each Tender is reviewed to ensure the total aggregate amount of Tender **(Contract price)** has been included.

Failure to meet these requirements may result in rejection of the Tender at the Tender opening stage.

17.2 Tender Evaluations. All Tenders not rejected at the Tender opening will be subject to a detailed evaluation by Department staff before a recommendation is made for award of Tender. This detailed review will take place as soon as possible after the public opening and will consist of the following:

- **Tender Form.** The Tender shall be submitted on the proper form, supplied by the Department.

Unit prices shall be written in ink or typewritten and shall be given in both words and numerals in the appropriate columns.

Forms may not be altered, unless called for in a Department Addendum.

- **Bid Conditions.** The Bidder is not permitted to include conditions with their Tender.

- **Bid Security.** Bid Security, meeting the requirements of Division 1, Section 2, Subsection 10.0, shall be included with the Tender.

- **Signatures/Acknowledgements.** The latest revised "Tender Signature Form" shall be completed and signed as an acknowledgement of the receipt and understanding of the documents (including Special Provisions and Addenda where applicable).

- **Arithmetic Checks.** The Tender will be checked for arithmetic errors. In cases where the written unit price does not agree with the numeric price, the written unit price will be used. All mathematical errors will be corrected by Department staff and the rating of Tenders as to total Bid will be based on the corrected totals.

Failure to meet the requirements of the above items will result in the rejection of the Tender.

- **Unbalanced Bids.** Each unit price in the tender submission shall represent its proportionate share of the total cost of The Work. Unbalanced Bidding is not permitted. The Minister reserves the right, in their sole and absolute discretion, to deem a Tender submission unbalanced and may reject any and all Tenders, which they so deem, and for this purpose, to be unbalanced.

- **Identical Bids.** Where two or more acceptable Bids are identical, the successful Bidder shall be selected by means of a coin toss performed by the Department in the presence of the identical Bidders.

18.0 AWARD OF TENDER. A compliant bid shall meet all the requirements stipulated in the invitation. Bids are deemed to be noncompliant if they fail to meet any mandatory requirement set out in the bid. Budget considerations aside, the Department will award the Contract to the lowest priced, compliant bid submitted by a responsible bidder deemed the lowest competent bid.

SECTION 2E - INSTRUCTIONS TO BIDDERS - ELECTRONIC BIDDING

1.0 CONTENTS OF TENDER. The Intent of the tender call is to obtain an offer to perform The Work to complete a unit bid price contract, defined and in accordance with the Contract Documents and Special Provisions. Bidders will be furnished by the Department with a Project Bids File (See www.bidx.com) which will state the location and direction of The Work to be constructed, and which will show the approximate estimate of the various quantities of The Work to be performed and materials to be furnished. The Contractor is advised that only electronic bids will be accepted. In order to bid on this tender, Contractors must be registered with Highway Construction Services, at Nova Scotia Department of Transportation and Infrastructure Renewal (herein referred to as "The Department") and with our online bidding service provider, Bid Express.

Register with Highway Construction Services, by calling 902-860-2999.

Register with Bid Express by calling 1-888-352-2439.

The Work shall not commence until written notification of award and receipt of the signed contract and after all conditions stated in the Contract Special Provisions have been satisfied. The time frame and date on which The Work shall be completed are provided in the Special Provisions.

All electronic documents, including Addenda, with or attached to the Project Bids File are a necessary part thereof.

2.0 INTERPRETATION OF APPROXIMATE ESTIMATE OF QUANTITIES. The Bidder's attention is called to the fact that the estimate of the quantities of work to be done and materials to be furnished under these Specifications as shown in the Project Bids File are approximate, and are given only as a basis of calculation upon which the award of the Contract is to be made. The Department does not assume any responsibility that the quantities shall obtain strictly in the work nor shall the Contractor plead misunderstanding or deception because of such estimate of quantities or of the character, location or other conditions pertaining thereto. The Department reserves the right to increase, decrease or omit all or any of the quantities of work shown in the Project Bids File, if the Department may deem it necessary.

3.0 EXAMINATION OF PLANS, SPECIFICATIONS, TENDER QUANTITIES AND SITE OF THE WORK. Electronic versions of Bid Documents are available for viewing on the Department's Agency Tab of the Bidx website (www.bidx.com). Bidders shall carefully examine the instructions to Bidders, plans, Tender quantities, Specifications, Special Provisions and site of the proposed work in order to satisfy themselves by examination as to all local conditions affecting the Contract and as to the detailed requirements of construction. Bidders shall visit the site of the proposed work in order to satisfy themselves by examination as to all local conditions affecting the Contract and as to the detailed requirements of construction.

Bidders, upon review of the electronic Tender documents, are responsible for verifying that the documents are complete. For change requests or the reporting of errors to an open Tender submitted *prior to 24 hours of the Letting* shall be directed to the Contract Administrator identified with the tender on the Bidx website. The Department and Procurement Services are advising Contractors, that Requests for changes or the reporting of errors to an open Tender *will not be accepted within 24 hours of the Letting*, as posted on Procurement Services webpage (https://procurement.novascotia.ca/ns-tenders.aspx).

For change requests or the report of errors to an open Tender submitted *within 24 hours of the Letting*, Highway Construction Services and Procurement Services will take no action and the Tender will close at the scheduled time. Issues brought forward by the contracting community will be addressed during the post Tender evaluation.

4.0 PREPARATION OF BIDS. Tender Documents are identified by the Project ID number as prepared by the Department and as shown on the Department's Bidx website. All electronic documents, including Addenda, with or attached to the Project Bids File are a necessary part thereof.

4.1 Project Bids File. The Bidder shall submit their bid pricing using the most recent Project Bids File furnished by the Department. All blank spaces in the Project Bids File shall be filled in correctly, where indicated, for each and every item for which a quantity is given, and the Bidder shall state the prices numerically for which they propose to do each item of The Work contemplated.

4.2 Addenda. Questions regarding the tender shall be directed to the Contract Administrator identified with the tender on the Bidx website. Addenda may be issued during the bidding period. Addenda will become part of Contract Documents. Verbal answers are only binding when confirmed by written addenda. Bidders shall acknowledge, as part of their bid submission, all addenda issued during the bidding period by the Department covering additions, corrections

and/or changes in the bidding conditions for the advertised work. The Bidder shall make all revisions to the Tender documents as instructed in the aforementioned Addenda.

The Bidder is responsible to ensure that all Addenda have been downloaded, reviewed and acknowledged. Electronic Bids that have been submitted without all Addenda having been downloaded and acknowledged will be rejected. It is not necessary to return the Special Provisions or Addenda.

When an Addendum is issued, the Bid Closing Time shall, where necessary, be adjusted to reasonably allow Bidders to receive the Addendum and adequately consider, prepare and submit their Bids, taking into account the impact of the Addendum.

4.3 Additional Documents. The following documents shall form part of this Tender:

- The Department's Standard Specifications dated February 1, 1997, and latest revisions. The version in effect on the tender shall be as outlined in the Special Provisions under "Standard Specification". Free Downloads are available at: http://novascotia.ca/tran/publications/standard.pdf.
- Agreement Form: A copy of the Agreement is available for review and can be found in Division 1 Section 3 of the Departments Standard Specification. Only the successful bidder shall be required to sign an agreement.
- Definitions: All terms are defined in Division 1 Section 1 of the Department's Standard Specification.

All "Other Documents" will be posted with the tender documents on the Department's Bidx website (www.bidx.com/). Documents are made available only for purpose of obtaining offers for this project. Their use does not confer license or grant for other purposes.

Where and as instructed in these Specifications and the Special Provisions, the Bidder shall submit any and all additional certificates, supplements and letters, plans and other information with their Tender submission. Any plans and other information that the Bid is based on shall be submitted with their bid submission to the location as specified in the Special Provisions, at time of closing.

5.0 POST BID SUBMISSIONS. To be eligible to be awarded any Department Highway Construction or Maintenance Contract to which these specifications apply, the successful Bidder must provide the following submission:

5.1 WCB Safety Certification. The Bidder shall provide within forty-eight (48) hours of request, proof of WCB Safety Certification (such as a Certificate of Recognition or Letter of Good Standing) issued by a company accredited by the Workers' Compensation Board of Nova Scotia. A list of approved Audit Providers can be found on the WCB website: http://www.wcb.ns.ca/Workplace-Injury-Insurance/WCB-Safety-Certified.aspx. The Contractor shall remain in good standing for the duration of the Contract.

5.2 Workers Compensation Coverage. The Bidder shall provide within forty-eight (48) hours of request, evidence of an account with the Workers' Compensation Board of Nova Scotia, coverage under the Workers' Compensation Act, revised statutes of Nova Scotia and a Clearance Certificate indicating that the Bidder is in good standing.

5.3 Agreement. The successful Bidder will be required to enter into an Agreement with the Department as represented by the "Agreement", also referred to as "Section 3 Agreement". A copy for review can be found in the Department's Standard Specification Manual. If awarded The Work, the successful Bidder agrees to be bound by the award of the Contract and to sign and return the required Agreement within ten (10) days of receipt. Should the successful Bidder not act on the Agreement with the Province, the Province may in addition to its other remedies award The Work to the next compliant Bidder with the lowest Bid. Once an executed Agreement is issued by the Department with a Bidder, notification of the final outcome of the procurement process will be listed on the Nova Scotia Procurement Web Portal.

5.4 Acknowledgement of Release Forms. The successful Bidder will be required to sign (where indicated) as acknowledgment the Release from All Liabilities Form and Release of Security Deposit Form-Affidavit of Payment.

5.5 Performance Assurance. Contract Security shall be in accordance with Division 1 Section 3 - Agreement of the Departments Standard Specification, or as otherwise stated in the Tender documents. Contract Security shall be supplied to the Department, by the successful bidder, within ten (10) days of request.

5.6 Registry of Joint Stock. A contract cannot be awarded unless the successful Bidder is registered and in good standing, in accordance with applicable laws. If the Bidder's business is not required to register in Nova Scotia, the Bidder will be required to submit registration from their applicable jurisdiction.

5.7 Certificate of Insurance. The Contractor, at its own expense, shall purchase and maintain in full force insurances to protect itself, the Department, their successors and assigns and their respective directors, officers, employees, agents and servants for the purposes and risks outlined herein. All policies shall be issued by financially sound insurers licensed to carry on business in Canada and shall be subject to approval by the Department. Insurers shall not cancel or materially change the policy without 60 days' prior written notice to the Department. Certified copies of the insurance policy or related documentation, in form and content acceptable to the Department, shall be delivered to the Department. Certificates of insurance evidencing renewal or replacement insurances, in form and content acceptable to the Department, shall be provided to the Department not later than fifteen (15) days prior to the expiration of existing policies. Upon request from any of the Departments or its authorized representatives, certified copies of any policy or policies shall be provided promptly.

Automobile Liability Insurance insuring all licensed vehicles owned, leased or operated by the Contractor. The Contractor must ensure that evidence of comparable coverage is provided by all Contractors and Subcontractor engaged in the performance of the Contract. This insurance will include the following provisions:

- Policy combined limit of liability of $5.0 million per occurrence
- Overall limit of liability of $5.0 million per occurrence can be structured as primary plus supplementary layers or primary plus Umbrella and/or Excess)
- Maximum deductible of $10,000 per occurrence

Commercial General Liability Insurance for liabilities arising out of property damage, personal injury and bodily injury including death resulting from any activity connected with the existence, management and performance of the Contract. All such policies shall name as additional Insured's the Department, their successors and assigns, and their employees. This insurance will include the following provisions:

- Policy limit of liability of $5.0 million per occurrence (can be structured as primary plus supplementary layers or primary plus Umbrella and/or Excess)
- Maximum deductible all other occurrences of $10,000 per occurrence
- Contingent employer's liability
- Personal injury liability
- Non-owned automobile liability
- Breach of any of the terms or conditions of the policy, or any negligence or willful act or omission of false representation by an Insured or any other person, shall not invalidate the insurance with respect to the Department.
- Primary insurance without right of contribution of any other insurance carried by any of the Departments.

5.8 Other Information. Bidders must also provide any other information as required in the contract documents and Special Provisions in the manner and within the timelines specified.

6.0 TAXES

6.1 Harmonized Sales Tax. The Province is not exempt for Harmonized Sales Tax (HST) purposes. As a result, the aggregate amount of Bid for Department Contracts are subject to HST, however, prices submitted shall not include HST.

The HST payable by the Department will be added as a separate item during Department processing of progress payments and, therefore, HST will not appear as a cost in the aggregate amount of the Bid.

Bidders are advised that they are eligible to claim an Input Tax Credit (ITC) for a portion of the HST paid in relation to the Contract to the requirements of the Government of Canada.

7.0 RECEIVING BIDS. Ensure bids are received as instructed by Internal Services Division (Procurement) before the letting time and date of the Letting as shown in the Bidx system. Bids submitted after the time shown will not be accepted. Bidders are solely responsible for submission of their bids in the manner and time prescribed.

8.0 COMPETENCY OF BIDDERS. The Bidder shall be responsible and capable of performing the various items of work Bid upon. A responsible Bidder is one who is capable in all respects to perform the Contract. Bidders, if specifically requested, may be required to furnish to the Department a statement covering experience on similar work, lists of machinery, plant, and other equipment available for the proposed work and such statements of their financial resources as may be deemed necessary.

The Department reserves the right to reject a contractor who is not deemed to be qualified in all respects to perform the work. The Department reserves the right to reject any proposed subcontractor(s).

9.0 REJECTION OF BID. The right to reject any or all Bids is reserved by the Minister and the lowest or any Bid will not of necessity be accepted.

Unbalanced Bidding: Each unit price in the bid submission shall represent its proportionate share of the total cost of The Work. The Minister reserves the right, in their sole and absolute discretion, to deem a bid submission unbalanced and may reject any and all bids, which they so deem, and for this purpose, to be unbalanced.

Financial Advantage: Bids which are structured to give the Contractor a financial advantage by being paid in the early stages of the Contract must be reviewed and agreed to in writing prior to award.

Information pertaining to unbalanced bidding and financial advantage can be found in the Departments Standard Specifications' Division 1, Section 3.

Bids that fail to meet all bid security requirements will be rejected. Bids will be rejected unless the Bidder has registered for Electronic Bidding (E-Bidding), submitted a valid Bid Security and the Bid Security shall be received and on file at Highway Construction Services prior to the Bid Letting Time.

More than one bid submission from an individual firm, partnership, corporation or association under the same or different names will not be considered and will result in the rejection of all bids so submitted. Collusion between Bidders will be sufficient cause for the rejection of all bids so affected.

The Department reserves the right to consider, during the evaluation of Bids:

i. the Department's past experience with the Bidder and/or its management;
ii. information provided in response to enquiries of credit and industry references;
iii. information received in response to enquiries made by the Department of third parties apart from those disclosed in the Bid Submission in relation to the reputation, reliability, experience and capabilities of the Bidder;
iv. the manner in which the Bidder provides services to others; and
v. the experience and qualification of the Bidder's senior management and project management.

The Department may, in its sole discretion, reject any Bid which does not fully satisfy the above considerations to its satisfaction.

Bids will be also be rejected if they show any omissions, alterations, conditions, additions not called for, or irregularities of any kind or if they contain a clause in which the Bidders reserve the right to accept or reject a Contract awarded to them.

10.0 BID SECURITY - REGISTRATION FOR ELECTRONIC BIDDING. Bids will be rejected unless the Bidder has registered for Electronic Bidding (E-Bidding), submitted a valid Bid Security and the Bid Security shall be received and on file at Highway Construction Services prior to the Bid Closing Time. Bid Security shall be in the amount as defined below:

- **Seventy Five Thousand Dollars ($75,000.00).** The Contractor shall only be permitted to submit a Bond on electronic Tenders where their aggregate amount of Tender is less than **One Million Dollars.**

- **One Hundred and Fifty Thousand Dollars ($150,000.00).** The Contractor shall be permitted to submit bids for all electronic Tenders regardless of the aggregate amount of Tender.

Contractors shall forward a Registration of Electronic Bidding Form and submit the required Bid Security annually to the Manager of Highway Construction Services. This deposit shall consist of a Certified Cheque, Irrevocable Standby Letter of Credit, Bank Draft or Money Order. A Bid Bond may also be acceptable to the Minister providing the Surety Company has met the Department's security requirements.

Bid Bonds submitted as security shall be signed and sealed by the Contractor and Surety, shall be on the Surety Company's letterhead, shall not be Contract specific, shall expire on March 31st of each year and shall remain in full force and effect for all Bids. The Department reserves the right to accept the Bid Bond wording prior to acceptance of the Bid Bond.

The deposit shall be made payable to the Department of Transportation and Infrastructure Renewal, Province of Nova Scotia, drawn upon a Canadian Chartered Bank and marked accepted by the financial institution upon which it is drawn. It will be forfeited to the Department if the Bidder neglects or refuses to enter into a Contract when called upon to do so.

Contract Security shall be in accordance with Division 1 Section 3 - Agreement of the Departments Standard Specification, or as otherwise stated in the Tender documents. Contract Security shall be supplied to the Department within ten (10) days of request.

11.0 DELIVERY OF TENDER. As instructed by ISD Procurement.

12.0 MODIFICATION OF BID. If the Bidder wishes to make a change(s) to their Bid, the Bidder may electronically modify their Electronic Bid submission at any time prior to letting through the Bidx website. Paper or facsimile modifications of any kind will not be accepted for Electronic Bid submissions.

13.0 WITHDRAWAL OF BID. A Bidder will be permitted to withdraw their Electronic Bid submission at any time up to closing through the Bidx website.

In circumstances where a Bidder is unable to withdraw their Electronic Bid submission through the Bidx website, a faxed or emailed letter signed by person(s) with signing authority for the Company will be accepted. This letter must be received by the Department's Highway Construction Services (HCS) via email: Tendering.hcs@novascotia.ca; or Fax: 902-861-4828 prior to the posted Bid Letting Time.

14.0 MATERIAL GUARANTY. Before any Contract is awarded the Bidder may be required to furnish a complete statement of the origin, composition and manufacture of any or all materials to be used in the construction of the work included in the Contract, together with samples, which samples may be subjected to any and all tests required by the Department to determine their quality and fitness for The Work.

15.0 SUBSTITUTIONS. Where Bid Documents stipulate a particular product, substitutions will be considered by a Departmental Representative up to 5 business days before letting. A request to substitute shall be directed to the Contract Administrator identified with the tender on the Bidx website. When request to substitute a product is made, the Departmental Representative may approve a substitution and will issue an Addendum and post to the Bidx website.

In submission of substitutions to products specified, Bidders are to include in their Bid, any changes required in The Work to accommodate such substitutions. Later claim by Bidder for addition to Contract Price due to a result of changes in The Work necessitated by use of substitutions will not be considered

16.0 VALUE ENGINEERING ALTERNATE (VEA). A Value Engineering Alternate will be entertained on Department Contracts. Such Contracts will be noted in the Special Provisions of said Contract.

A VEA will not be considered when awarding the tender.

Award of the Tender will be based solely on the original Tender proposal and design. The VEA may be accepted or rejected by the Department at its sole discretion. The proposing of any design does not place the Department under any obligation to accept the design. Net construction savings will be shared equally between the Contractor and the Department. Minimum overall savings will be identified, confirmed and fixed prior to the Department giving approval to a VEA. All other terms and conditions will be as specified in the Department's VEA policy contained in Appendix 'D' of the Standard Specifications.

17.0 PROCEDURES FOR BID OPENINGS AND EVALUATIONS.

17.1 Bid Opening. Offers will be opened at the designated time and date as shown on the "Lettings" tab on the Bidx website (www.bidx.com/) and at the website of the Department of Internal Services (Procurement): https://procurement.novascotia.ca/.

A preliminary check will be conducted at the Bid opening to ensure the following information has been included.

- **Bid Security Registration for Electronic Bidding.** The Bidder meets the requirements for Electronic Bidding (E-Bidding) as described above in **10.0 BID SECURITY - REGISTRATION FOR ELECTRONIC BIDDING** prior to the Bid Closing Time.

Failure to meet this requirement may result in rejection of the Bid at the Bid opening stage.

17.2 Tender Evaluations. All bid submissions not rejected at the Bid opening will be subject to a detailed evaluation by Department staff before a recommendation is made for award of Tender. This detailed review will take place as soon as possible after the public opening and will consist of the following:

- **Project Bids File.** The bid shall be submitted on the most recent Project Bids File, supplied by the Department.
- **Bid Conditions.** The Bidder is not permitted to include conditions with their bid submission.
- **Electronic Signatures and Acknowledgements.** The Electronic bid submission shall include acknowledgement of the latest Special Provisions and Addenda. Acknowledgement of the Special Provisions and Addenda shall affirm the Bidder's review and understanding of the latest documents (including Special Provisions and Addenda where applicable).

Failure to meet the requirements of any of the above items will result in the rejection of the bid submission.

- **Identical Bids.** Where there is a tie in lowest pricing with two or more acceptable bids, the successful Bidder shall be selected by means of a coin toss performed by the Department in the presence of the identical Bidders. The selected bidder will be informed in writing.

18.0 AWARD OF TENDER. A compliant bid shall meet all the requirements stipulated in the invitation. Bids are deemed to be noncompliant if they fail to meet any mandatory requirement set out in the bid. Budget considerations aside, the Department will award the Contract to the lowest priced, compliant bid submitted by a responsible bidder deemed the lowest competent bid.

SECTION 3 - AGREEMENT

THIS AGREEMENT made this ..... day of..... in the year Two Thousand

and..... by and between.....

herein called the **CONTRACTOR**, the Party of the First Part, and **HER MAJESTY THE QUEEN**, in the right of Her Province of Nova Scotia as represented in this behalf by the **HONOURABLE MINISTER OF TRANSPORTATION and INFRASTRUCTURE RENEWAL** of the Province of Nova Scotia herein called the **MINISTER,** the Party of the Second Part.

WITNESSETH, AS FOLLOWS:

1.0 GENERAL COVENANT. The Contractor hereby covenants and agrees with the Minister as herein provided in connection with the following work, namely:

2.0 NO IMPLIED CONTRACT. It is hereby understood and agreed between the Parties hereto that no implied Contract of any kind whatsoever, by or on behalf of the Minister, shall arise or be implied from anything contained in this Contract, or from any position or situation of the Parties at any time. It is further agreed that this Contract made by the Minister is and shall be the only Contract, upon which any rights against The Minister are to be founded.

3.0 HOW PARTY OF FIRST PART IS READ. Whenever this Agreement is entered into by more than one Party or Parties of the First Part, the word "Contractor" shall be read "Contractors". All pronouns in the Contract referring to the Contractor shall be read as plural and whenever a Corporation is the Party of the First Part, the said pronouns shall be read accordingly.

4.0 CONSTRUCTION OF CLAUSE AS COVENANTS. Whenever it is stipulated in any part of the Contract that anything shall be done or performed by either of the Parties hereto, it shall have the same effect and be construed as if such Party had entered into a covenant with the other Party to do or perform the same, and as if any such covenant had been expressly made on the part of the Contractor not only on their own behalf but also on behalf of their legal representatives, Successor or Assigns; and as if any such covenant on the part of the Minister and been made on their behalf and their Successors in Office.

5.0 INCORPORATION IN CONTRACT. The following documents shall form part of this Contract and shall have the same effect as if the same had been set forth at length in the body of the Agreement:

(a) Department of Transportation and Infrastructure Renewals Standard Specification dated February 1, 1997, and latest revisions.
(b) Special Provisions, together with the Instructions to Bidders, Release from All Liabilities, Addenda and Plans
(c) Contractor's Bid Submission

6.0 INTENT OF PLANS AND SPECIFICATIONS. The Plans and Specifications are to be taken co-jointly, each as explaining the other. The two together shall be held to cover and to be descriptive of any and all work that could reasonably be required to be done, in order to properly complete The Work under this Contract. Should there be any discrepancy or disagreement between the figures on the Plans, and the scale of the same, or between the descriptive writings on the Plans, and the Specifications, the Engineer shall decide which is to be followed. Should there be anything shown on the plans but not described in the Specification, or vice versa, The Work shall be fully executed and carried out, just as if fully shown and described in both. Any and all minor details of The Work not specifically mentioned in the Specifications or shown on the Plans, but obviously necessary for the full and proper completion of The Work, shall be considered as incidental, and as being a part of and included in The Work, to be done under the Contract. The Contractor will not be entitled to any extra or additional compensation for such work. Should any dispute arise between the Engineer and Contractor as to the true meaning of the Plans and Specifications upon any point, the decision of the Engineer shall be final and conclusive. Whenever it is specified that the Contractor must prepare their own Plans, the approval of such plans by the Engineer shall be general only and such approval will not relieve the Contractor from any responsibility whatsoever. The Contractor will not be allowed any compensation for such Plans and the Contract price shall include the cost of furnishing them.

7.0 WHAT ITEMS IN CONTRACT INCLUDE. The description of The Work and any portion thereof and of the materials referred to by any item of which a price is given in this Contract includes not only the particular kinds of work or materials mentioned in the said item but also all and every kind of work, labour, tools, plant, materials, equipment, articles, and things whatsoever necessary for the full execution, completion, and delivery, ready for use, of such respective

portions of The Work, in accordance with the Plans, drawings and Specifications, to the satisfaction of the Engineer.

In order to facilitate Department accounting some Contracts are made up of two or more Sections as described on the Tender Forms.

If, during the conductance of a Contract which consists of more than one Section, work is authorized by the Engineer for which there is no Tender Item or Unit Bid Price then The Work will be carried out by the Contractor, and payment for this work shall be made as per the Tender Unit Bid Price as shown on the Other Section of the Contract.

8.0 CONTRACT SECURITY. Within ten (10) days, after the notification of intent to award the Contract, the successful bidder shall provide the Province with the specified Contract Security to ensure performance of the Contract (the Contract Security).

8.1 Contract Security is acceptable in either of the following manners:

A Performance Bond and a Labour and Material Payment Bond, both valued at fifty percent (50%) of the Contract price. The Minister will accept bonds from an established Surety Company that is satisfactory to and approved by the Province. Bonds are to be on the Surety Company's letterhead and the wording and punctuation must be identical to the wording and punctuation on the original Department of Transportation and Infrastructure Renewals Province of Nova Scotia form. Wording can be found in the Standard Specification, Highway Construction and Maintenance Manual - Appendix A. Bonds must be witnessed, signed and sealed by both the Contractor and the Surety Company.

or;

A Certified Cheque (marked accepted by the financial institution upon which it is drawn), an Irrevocable Standby Letter of Credit, a Bank Draft or a Money Order, in a sum not less than ten percent (10%) of Contract price.

The Contract will not be awarded until Contract Security has been received

Contract Security will be held and retained by the Minister until sixty (60) days following Substantial Performance of the Contract, at which time the Contractor may replace their original security with new performance assurance for the standard one year period, in the form of Certified Cheque, Irrevocable Standby Letter of Credit, Bank Draft, or Money Order. Said security shall be not less than five percent (5%) of the Contract price (including all bid modifications). The Certified Cheque, Irrevocable Standby Letter of Credit, Bank Draft, or Money Order will be retained by the Minister until the Minister is satisfied that The Work has been completed and all obligations under the Contract have been met, and the warranty period has expired, whichever is later, as security for the due and faithful performance, observance and fulfilment by the Contractor of all the covenants, provisions, agreements, conditions and reservations in this Contract contained, on the part of the Contractor to be observed, performed and complied with. Provided always and it is understood and agreed that the Contractor assumes the risk and shall bear any loss in respect to the security deposited as aforesaid occasioned by the failure or insolvency of the banks on which any Certified Cheque or Letter of Credit was drawn or in which any deposit was made in connection with the security aforesaid.

Unless otherwise stated in the Contract documents, the expiration date for any Irrevocable Standby Letter of Credit used as security for this Contract shall be no earlier than one year following the completion date of the Contract. If at any time during the execution of this Contract, the Department determines that the completion of any portion of work included in this Contract, including any warranty work, may extend beyond the original expiration date, the Contractor shall provide to the Engineer, a new Letter of Credit with an expiration date of one year beyond the original expiration date or written proof from the issuer of the original Letter of Credit that it has been extended. If a new Letter of Credit or proof of extension is not provided to the Engineer more than 10 working days prior to the present expiration date, the Department shall automatically draw the full amount of monies stated in the Letter of Credit and hold such monies until a new Letter of Credit or proof of the extension is provided to the Engineer.

If at any time hereafter the Contractor should make default under the said Contract, or if the Minister, in their sole discretion, acting under the powers reserved in the said Contract, shall determine that the said works, or any portion thereof remaining to be done, should be taken out of the hands of the Contractor, and be completed in any other manner whatsoever than by the Contractor, or if the Contractor refuses or neglects to pay any salaries or wages or any accounts for materials due by the said Contractor for work done or materials supplied by any person in connection with the said work, the Minister may, in either case, dispose of said security and of the interest which may have accrued thereon, for the carrying out of the construction and completion of The Work of the Contract, or for paying any salaries or wages for work done, or any accounts for materials supplied for the said works that may be left unpaid by the said Contractor.

In the event of any breach, default, or non-performance being made or suffered by the Contractor in respect of any of the terms of conditions, covenants, provisions, agreements, or restrictions herein contained, which on the part of the Contractor should be observed, performed or complied with, all costs incurred by the Department as a result of the default, including the cost of completing The Work and repairing any defect or failure, will be deducted from performance security. If the costs incurred by the Department exceed the sum which would have been payable under the Contract, then the Contractor, shall be liable and shall pay to the Department the amount of the excess up to the specified amount of the security deposit.

Upon the due and faithful performance, observance and fulfilment by the Contractor of all the terms, provisions, covenants, agreements, conditions and reservations, herein before contained, on the part of the Contractor to be observed, performed and complied with, the Contractor shall be entitled to be repaid or to receive again the money so deposited. However, it is understood that the Minister shall not be under any obligation to cause the said money to be placed at interest, or to earn, or to endeavour to earn, interest thereon.

9.0 INVESTIGATION OF EVERY CONDITION OF THE WORK. The Contract is made and entered into by the Contractor and the Minister on the distinct understanding that the Contractor had, before execution, investigated and satisfied themselves on the character and topography of the county, its streams, water courses and rainfalls, the dimensions, levels, character and nature of all existing works, buildings, constructions, road, lands, waterways, sewers, pipes, the nature of the strata through which excavations, if any, are to be made, and all other things and of every condition affecting The Works to be executed and the labour and material to be provided, and that the execution of this Contract by the Contractor is founded and based upon their own examination, knowledge, information and judgement, and not upon any statement, representation or information made or given, nor upon any information derived from any quantities, dimensions, tests, Specifications, Plans, maps, or profiles made, given or furnished, by the Minister or Minister's representative. Any such statement, representation or information, if so made, given or furnished, was made, given or furnished merely for the general information of Bidders and is not in any way warranted or guaranteed by or on behalf of the Minister. No extra allowance will be made to the Contractor by, and the Contractor will make no claim against the Minister for any loss or damage sustained in consequence, or by reason of, any such statement, representation or information being incorrect or inaccurate, or on account of excavating in rock or other difficult ground, or of unforeseen difficulties of any kind.

10.0 EMPLOYMENT OF CONTRACTOR AND WORKERS. It shall be a condition of this Contract that, at the time the Contract is entered into, the Contractor shall be a resident of Canada or if the Contractor is a corporation, it was for a period of at least one year immediately prior to that time, incorporated and carrying on business in Canada or the owners of a majority of the shares of such a corporation were resident, for a period of at least one year prior to incorporation, in Canada. Canadian material is to be used in carrying out The Work to the full extent to which it is procurable, consistent with proper economy and the expeditious carrying out of The Work. Residents of Canada, only, are to be employed on The Work. In employing persons there shall be no discrimination in favour of or against any person by reason of race, sex, religious views or political affiliations. All applicable labour, environmental and human rights legislation shall be respected.

11.0 LINES AND GRADES. The Work, and all parts thereof, are to be constructed according to the lines and grades on the Plans, and shall conform accurately to the same. The lines and grades will be given by the Engineer or their representative, and the Contractor must carefully preserve from injury or disturbance all stakes and benchmarks set during the progress of The Work for marking lines and grades. Should errors be made by the Contractor in working to the lines and grades as given by the Engineer, such mistakes and errors must be made good by the Contractor at their own expense.

12.0 DESIGNATED HIGHWAYS. The Minister as provided for in Section 12 of the Weights and Dimensions of Vehicles Regulations made under Section 191 of the Motor Vehicles Act will designate certain portions of Highways for purposes incidental to the construction of a Highway as follows. This designation will be made with or without a formal request having been made as indicated.

12.1 Grading Contracts.

12.1.1 The section of Highway under Contract excepting all bridges will be designated at the time said Contract is awarded without formal request from the Contractor.

12.1.2 Bridges within the limits of the Contract may be designated on formal request from the Contractor provided the structure is deemed capable of bearing the increased loading. The Contractor may be required to reinforce the structure to the satisfaction of the Engineer.

12.1.3 Sections of Highway and bridges therein that may be used for purposes incidental to a Highway under Contract may be designated on formal request from the Contractor. The Contractor may be required to reinforce the structure to the satisfaction of the Engineer.

12.2 Upgrading Contracts.

12.2.1 A section of Highway under an upgrading Contract may be designated on formal request from the Contractor provided the request is favourably recommended by the District Director, except the designation will not be permitted on any paved Highway or paved portion of the Contract. If a paved surface is to be pulverized, designation will be considered.

12.2.2 Bridges within the limits of the Contract may be designated on formal request from the Contractor provided the structures are deemed capable of bearing the increased loading. The Contractor may be required to reinforce the structure to the satisfaction of the Engineer.

12.2.3 Sections of Highway and bridges therein that may be used for purposes incidental to a Highway under Contract, may be designated on formal request from the Contractor. The Contractor may be required to reinforce the structures to the satisfaction of the Engineer.

12.3 Paving Contracts.

12.3.1 A section of Highway under a paving Contract may be designated on formal request from the Contractor provided the request is favourably recommended by the District Director, except the designation will not be permitted on any paved Highway or paved portion of the Contract.

12.3.2 Sections of Highway and bridges therein that may be used for purposes incidental to a Highway under Contract, may be designated on formal request from the Contractor. The Contractor may be required to reinforce the structures to the satisfaction of the Engineer.

12.4 Repaving Contracts. A section of Highway under a repaving Contract will not be designated because of its paved surface. If the surface is to be pulverized, then consideration may be given to the designation. A section of Highway designated by the Minister is only designated with respect to vehicles owned or hired by the Contractor or their subcontractor and being used to do work on the Contract. The Contractor shall, at no cost to the Department, carry out grading, gravelling, and dust control operations on the designated road(s) as required to maintain a riding surface acceptable to the Department during the course of the operation. Said road(s) shall be left in a condition acceptable to the Department on completion of The Work.

13.0 CONDITION OF ROADS IMMATERIAL. Whenever it becomes necessary to transport the Contractor's plant, machinery or materials over roads adjacent to or leading to The Work under this Contract, the Contractor shall have no claim against the Minister for any cost or delays that may be incurred or occasioned by reason of the condition of said roads, or of any bridge or obstruction.

14.0 PATENTED DEVICES, MATERIALS AND PROCESSES. The Contractor shall indemnify fully the Minister against all suits or actions arising from the claims of any person or persons who are, or claim to be, the patentees of any process used in connection with The Work, or of any materials, plant machinery, tools or appliances, used therein, or thereon, or in any way in connection therewith.

15.0 MATERIALS FURNISHED BY THE DEPARTMENT. When the Department is required to supply materials under the Contract, the Contractor shall decide when materials are required on The Work, and shall notify the Engineer giving reasonable advance notice.

The full amount of material in each shipment must be accounted for by the Contractor and any theft or loss, or damage to materials after receipt will be charged against them. Materials supplied to the Contractor by the Department shall not be used by the Contractor for any purpose other than that for which they were supplied. Should any material supplied by the Department be damaged while in possession of or under the control of the Contractor, they shall be replaced by the Contractor at their own expense.

16.0 LAND ACQUISITION. At the time of award of a Contract all the required right-of-way may not have been acquired by the Department. The Contractor is not permitted to work on any section of a Contract until first obtaining permission from the Engineer. Delays in acquiring the necessary right-of-way by the Department shall not constitute a claim on the part of the Contractor for damages or for any loss of anticipated profits.

17.0 REGULATIONS AND GUIDELINES CONTAINED IN APPENDIX B. Regulations and guidelines contained in Appendix B are provided for information only. Procurement of the most current editions to these regulations and guidelines from the issuing authority is the responsibility of the Contractor. The Contractor shall conduct The Work in accordance with said edition and/or the terms and conditions of the approvals granted by said authority. If there is a conflict, in the terms and conditions, between the approved guidelines and the actual permit, the more stringent conditions shall apply.

18.0 PERFORMANCE BY CONTRACTOR. All Contractors shall, at their own cost and expense, furnish and provide all and every kind of labour, superintendence, services, tools, implements, machinery, plant, materials, articles and things whatsoever necessary for the due execution and completion of The Work. They shall fully construct, erect and complete the same within the time specified, in the most thorough, proficient and substantial manner, in every respect to the satisfaction and approval of the Engineer, and deliver the same to the Minister, all in the manner and upon the terms and conditions of the Contract.

19.0 QUALITY OF WORK AND MATERIAL. All The Work shall be constructed of the best materials of their several kinds, and shall be finished in the best and most quality of work, in the manner required by, and in strict conformity with this Contract, the Plans and Specification, and the working or detail drawings, which may from time to time be furnished, and to the complete satisfaction of the Engineer. The judgement and decision of the Engineer as to whether the materials supplied and The Work done under the Contract comply with the requirements of the Plans and Specifications shall be final and conclusive.

20.0 CONTRACTOR'S PERSONAL ATTENTION. The Contractor shall give their constant personal attention to The Work while it is in progress, or they shall place it in charge of a competent and reliable agent or representative who shall have authority to act for, and be considered the lawful representative of the Contractor. Any orders, or instructions regarding The Work, which shall be given to the said agent or representative, shall be considered as given to the Contractor. The Contractor shall at all times employ a sufficient number of workers or supervisors for the proper performance of The Work, which they shall prosecute to full completion in the manner and within the time as specified.

21.0 SCHEDULE OF WORK. The Contractor will be required to submit a schedule of work in accordance with the completion date of the Contract. No work shall commence until a work schedule has been provided to and approved by the Engineer. The Engineer may, during the course of the Contract, require the Contractor to produce a revised schedule of completion indicating what additional workers, machinery, tools or other plant and equipment or the quantity of proper materials required to successfully conclude the Contract within the completion date.

22.0 TIME OF COMPLETION. The whole of The Work to be done under this Contract shall be finally completed in full accordance with all the terms and conditions of this Contract on or before the day specified for such completion in the Tender which forms part of this Contract. The Contractor shall complete as quickly as it is deemed practicable any portion of the Contract upon which they have undertaken work.

23.0 CHARACTER OF WORKERS AND EQUIPMENT. The Contractor shall at all times employ sufficient labour and equipment for prosecuting the several classes of work to full completion in the manner and time specified. Any person employed by the Contractor, who, in the opinion of the Engineer, does not perform their work in a proper and skilful manner, or is disrespectful, intemperate, disorderly, or otherwise objectionable shall, at the written request of the Engineer, be forthwith discharged and such persons shall not again be employed in The Work. All machinery and equipment owned or controlled by the Contractor, which is proposed to be used on The Work shall be of sufficient size and in such mechanical condition as to meet with the requirements of The Work, to produce a satisfactory quality of work. The Engineer may order the removal and require replacement of any unsatisfactory equipment. No change in the machinery and/or equipment employed on The Work, which shall have the effect of decreasing its capacity, shall be made except by written permission of the Engineer. The measure of the capacity of machinery and equipment shall be its actual performance on The Work.

24.0 RECORDS OF CONTRACTOR OPEN FOR INSPECTION. The Contractor shall keep complete records of the time worked by each of their employees on this work, and such pay-rolls, time books, books or accounts, invoices and statements shall be at all times open for inspection and audit by the Minister, the Minister's representative, or the Auditor General of Canada, who shall be assisted in every possible way by the Contractor to enable the Minister or such representative or the Auditor General of Canada, to ascertain as far as possible, the exact payment, sums or claims so due and remaining unpaid by the Contractor.

25.0 NOTICE TO CONTRACTOR. Any notice, order, direction or other communication mentioned in this Contract to be notified, or given the Contractor, shall be deemed to be well and sufficiently notified or given, if the same be given by the Engineer or Engineers representative, and be delivered to the Contractor personally or the Contractor's

representatives or supervisor on The Work, or left at the Contractor's office, or mailed in any post office to the Contractor or their agent, addressed to the address mentioned in the Contract, or to the Contractor's last known place of business or residence.

26.0 WORK NOT IN CONTRACT. The Minister may at any time without payment to the Contractor, send and employ on the work site, other contractors and workers, with such machinery, tools, plant, equipment, materials and incidentals, as the Engineer may deem necessary to do any work not comprised in the Contract. The Contractor shall afford to them all reasonable facilities to the satisfaction of the Engineer for doing such work. The Work of the Contractor shall be interfered with as little as the Engineer may deem practicable. The taking of possession of the whole or any part of the work of the Contractor shall not be considered an acceptance by or on behalf of the Minister of the whole or any portion of The Work comprised in the Contract.

27.0 INSPECTION GENERAL. The Engineer may provide for the inspection of all materials used and work done under the Contract by assistants and inspectors, acting under their direction. Such inspection may extend to, and cover all or any parts of The Work and also the preparation and manufacture, whether within the limits of The Work or elsewhere, of any of the materials to be used, or for the execution and final completion of the said work. Inspectors shall have full authority to reject defective materials or quality of work, and to suspend the carrying out of any work that is being improperly done, subject to the final decision of the Engineer. Inspectors shall have no authority to permit deviations from, or to relax any of the provisions of the Specifications without written permission or instruction from the Engineer, nor to delay the Contractor in any way by failure to inspect materials and quality of work with reasonable promptness of being notified. All materials and quality of work will be inspected thoroughly and carefully, and the Contractor will at all times be held strictly to the spirit of the Specification. All The Work must be first-class in every particular and in thorough conformity with the Plans and Specifications.

28.0 UNBALANCED BIDS. Each unit price in the Tender submission must represent its proportionate share of the total cost of The Work. Bidders shall not submit an Unbalanced Bid. The Minister reserves the right, in their sole and absolute discretion, to deem a Tender submission unbalanced and may reject any and all Tenders, which they so deem, and for this purpose, to be unbalanced. Two types of Unbalanced Bids have been recognized:

28.1 Mathematically Unbalanced Bid. The Department defines a unit price for an item(s) as Mathematically Unbalanced if the price in the Tender is greater than 50% above the 36-month rolling average item unit price or 75% or more below the 36-month rolling average item unit price. Lump sum bid items will not be analysed. If a low Bid is determined to be Mathematically Unbalanced the Department will allow the Bid to be accepted. Mathematically unbalanced bids will be subject to further analysis to determine if they are Materially Unbalanced.

28.2 Materially Unbalanced Bid. A Materially Unbalanced Bid means a Mathematically Unbalanced Bid where, following a thorough analysis by the Department, there is a reasonable doubt that the Bid does not represent the actual lowest cost to the Department and meets all of the following criteria:

1) An error in drafting of the Tender Form relating to the estimated Unit Item Quantity or a related Special Provision has been found by the Department in the items identified as having a Mathematically Unbalanced unit price and;
2) The quantity error in the Unit Item Quantity present in the Original Tender Documents is determined by the Department to be 10% or greater and is of sufficient impact to justify further analysis and;
3) Once the error is corrected by the Department and applied to all Bids, the low Unbalanced Bid is no longer considered the low Bid.

A Bid which is identified as Materially Unbalanced may be disqualified.

If the Department determines during the term of the Contract that there has been a Materially Unbalanced Bid, then the Department reserves the right to terminate the Contract immediately.

29.0 FINANCIAL ADVANTAGE. If the Bid is determined to be structured to give the Contractor a financial advantage by being paid in the early stages of the Contract, an amount exceeding the actual value of The Work performed, the following principal must be agreed to in writing prior to award. The contractor shall not be paid an amount which exceeds the value of The Work which has been completed to date. The payment of this value will be issued on progress payments in accordance with threshold percentages (25%, 50%, 75% and 100%) of aggregate tender value reached. The aggregate tender value shall be determined by applying the 36-month rolling average prices to the major unit items which have been completed.

30.0 WORK UNDER CONTROL OF ENGINEER. The Work shall, in every particular, be under and subject to the control and supervision of the Engineer. All orders, directions or instructions at any time given by the Engineer with respect, thereto, or concerning the conduct thereof, shall by the Contractor promptly and efficiently be obeyed, performed and complied with, to the satisfaction of the Engineer. All instruction and directions or certificates given, or decisions made, by anyone acting under the authority of the Engineer shall be subject to their approval, and may be cancelled, altered, modified and changed as they may see fit. In cases where the Contractor or Minister is dissatisfied with the decision of anyone acting under the authority of the Engineer, an appeal, may be made to the said Engineer, whose decision in the matter shall be final and conclusive.

31.0 ENGINEERS DECISION FINAL. It shall be distinctly understood that the sole and every part of The Work to be done under this Contract is to be executed and completed in full accordance with the Plans and Specifications covering The Work, and any further orders or directions or instructions that may be given from time to time by the Engineer in regard thereto, and to the complete satisfaction of the said Engineer, as evidenced by their written certificate, which certificate, shall be a condition precedent to the rights of the Contractor to be paid for The Work; and that the said Engineer is to be the sole judge and arbitrator as to the mode and manner in which The Work is to be carried out, and as to the efficiency, quality and quantity of The Work done or materials furnished under the Contract. The Engineer shall also decide any and all questions that may arise as to the meaning or interpretation of the Plans and Specifications, and every other matter and thing incident, to bearing upon or arising out of the Plans, Specifications and Contract. Their judgement, decision, or award upon any and all such questions shall be absolutely final, binding and conclusive, as between the parties to the Contract.

32.0 FORCE MAJEURE. None of the parties shall be considered responsible for delays in the execution of the work, or for not carrying them out, when this is due to circumstances that are beyond their control and without the fault of the party excused. The party affected by a case of force majeure shall report it to the other party in writing, as soon as possible and never later than three (3) days, from the moment it gains knowledge of it, mentioning the cause, its estimated duration and the consequences for the contracted work, attaching the documents that serve as evidence of it. Compliance with the obligations affected by the force majeure events shall be suspended for the duration of the said events and the parties shall not be liable for the consequences arising from them. After cessation of the force majeure event, the parties shall agree upon which measures are required to, as far as possible, recover the time lost, taking all measures within their reach so that the execution of all the Contract's obligations is re-established on the best conditions and with the least delay possible, after the cause has ceased. Notwithstanding this, if the force majeure event was to be prolonged for a period over three months, any of the parties is entitled to terminate the Contract.

The following cannot be invoked by the Contractor as force majeure causes:

1) Meteorological conditions or events that could reasonably have been predicted by the Contractor
2) Any shortage of manpower or materials
3) Any delay or failure in obtaining the materials
4) Any non-compliance or delay of any sub-contractor
5) Strikes, except for cases of general strikes in the sector, or lock outs.

33.0 EXTENSION OF TIME. The Department may consider an extension to the completion date of the Contract, on the following basis:

- Federal or Provincial Laws passed subsequent to the date of the Contract adversely affecting progress.
- When the Contractor is requested by the Department to perform additional work or work beyond the scope of the original Tender design, the Engineer will extend the completion date by the same proportion of time as the additional work bears to the original work.
- Delay by the Department in the issuance of any Plans, materials, notices or other items which in the opinion of the Engineer interfered with the Contractor's approved start date and/or work schedule.
- Any other conditions which in the opinion of the Engineer warrants consideration for an extension of time.

Failure by the Contractor, in the opinion of the Engineer, to prosecute The Work continuously and in the most diligent and efficient manner possible, using every means and alternative methods available to complete The Work, will be cause for denial of any such time extension. Proceeding with The Work without a Work Schedule approved by the Engineer in accordance with Division 1 Section 3 Clause 21, or noncompliance with said Work Schedule in the opinion of the Engineer, will be grounds for denial of any requested time extension. No extensions due to weather related conditions will be considered. The Department may consider an extension or suspension of the Contract, if in the opinion of the Engineer, either would be in the best interest of the Department. Where an extension or suspension of the Contract has been granted by the District Director, liquidated damages as detailed in the Contract documents will not be applied for the following time periods:

- Asphalt Concrete Paving/Repaving Contracts -December 1 to May 1
- Micro-Surfacing Contracts - November 1 to June 1
- Seal Coat Contracts - November 1 to June 1

At the discretion of the Engineer, the Contractor may be permitted to resume work during these periods. In such cases, liquidated damages shall be re-applied on the day following the first day work resumes, and continue for each and every day thereafter until such time that the Contractor completes their work on the Contract. Any extension of time that may be granted to the Contractor shall be so granted and accepted without prejudice to any rights of the Minister whatsoever, under this Contract, and no assent thereto on the part of the Contractor shall be necessary.

34.0 DELAYS BEYOND TIME LIMIT. No delay or delays within or beyond the time fixed for the completion of The Work shall void the Contract or any part thereof, or the obligations imposed upon the Contractor. No delay shall make void or in any way impair or affect any current or other bond, guaranty, security, or obligation for the performance of the Contract; the Contractor shall not have, nor make any claim or demand, nor bring any action, suit or petition against the Minister for any damage which they may sustain by reason of any delay or delays, from whatever cause arising in the progress of The Work.

35.0 CHANGES IN CONTRACT. The Engineer shall have the right and authority at any time, either before the commencement or during the construction of The Work, or any portion thereof, to make any changes in the lines or grade or in the dimensions, form, Plan, location, position and quantity of The Work to be done, or of any part or parts thereof, or in any other thing connected with The Work, whether or not such changes increase or diminish the quantity of work to be done, or the cost of doing the same. If the changes diminish, or increase the quantity of work to be done, they shall not constitute a claim on the part of the Contractor for damages, or for any loss of anticipated profits. No changes or omissions shall in any way annul or invalidate the Contract, but all additional work or changes in The Work contracted for shall be considered and treated as if originally contracted for, and shall be subject to all the terms, conditions and provisions of the original Contract. No deviations from the Plans or specifications shall in any case be made by the Contractor without a written order signed by the Engineer, setting forth the nature and extent of the changes proposed.

36.0 UNFORESEEN WORK

36.1 Unforeseen Work. Unforeseen work, as defined in Division 1, Section 1 of these Specifications, shall be authorized and payment provided for by one of the two following methods:

36.1.1 Letter of Quotation. The Contractor shall submit a letter of quotation to the Department containing a unit price or prices for the additional work. The price or prices shall be approved by the Department before the commencement of work.

36.1.2 Extra Work Order. The Engineer shall issue a written Extra Work Order to the Contractor setting out the nature and extent of the extra work proposed. Compensation for The Work is to be on a cost plus basis as described below. Statements of account shall be submitted on Department forms. All labour, materials, and equipment used shall be suitable to complete The Work described and shall be approved by the Engineer prior to The Work being done. Labour rates are to be actual labour rates paid by the Contractor to their employee. Equipment rates are not to exceed those contained in the Department's Procedure: PR5004 Equipment Rental Rates found on the Bidx website and the TIR Internet site. https://novascotia.ca/tran/highways/. Truck rates shall be Department rates in effect at the time The Work is done. Rates for equipment not contained in the Equipment Rental Rates shall be approved by the Engineer before The Work is commenced. In cases where the Contractor does not have their own equipment available to complete The Work and must hire equipment, the rate to be paid to the Contractor shall be approved by the Engineer before the equipment is hired. The actual cost of labour, materials, rented equipment and outside services, shall not exceed reasonable market value. The Contractor shall furnish the Engineer with supporting invoices for all materials, outside services and rented equipment for which the rates are not in accordance with the Department’s Equipment Rental Rates.

The Contractor will be allowed an additional 20% on the actual cost for labour, materials, outside services, and hired equipment. This additional percent is for the use of tools, Contractor's plant (except such plant as rentals have been agreed upon) Superintendent's payroll and profit.

36.2 Refusal to do Work, Claims. In the absence of a written letter of quotation or written Extra Work Order, the Contractor will not be entitled to payment for any such unforeseen work. If the Engineer and Contractor fail to agree upon the unit price quoted for the Extra Work, or the Contractor refuses to carry out The Work as described in the Extra Work Order, the Engineer shall have the right to have The Work carried out and completed by others. The Contractor

shall have no claim for hindrances or delays caused by getting the unforeseen work completed.

In the case of work done under authorization of an Extra Work Order, the Contractor shall submit the necessary forms and supporting documentation to the Engineer within 60 days of the last day of the period during which work was done. The period referred to is the monthly period for which progress payment for work on the Contract is normally made.

37.0 ADDITIONAL WORK

37.1 Less than 10% of Original Tender. Additional Work, as defined in Division 1, Section 1 of these Specifications, less than 10% of the original Tender must be authorized and payment provided for by one of the two methods outlined in Sections 36.1.1 and 36.1.2 of these General Provisions.

37.2 Greater than 10% of Original Tender. If the additional work is greater than 10% of the original Tender, the additional items or work will be tendered in accordance with the Government tendering policy or an application for sole sourcing made to the Priorities and Planning Committee.

38.0 DEFAULT OR REMOVAL OF WORK FROM THE CONTRACTOR.

38.1 Causes and Notices. In the event a Contractor:

- has defaulted or delayed in commencing or, in the Departments opinion, has defaulted or delayed in diligently or suitably executing The Work or any portion thereof to the satisfaction of the Engineer and the Engineer has given notice thereof to the Contractor and has by such notice required the Contractor to put an end to such default or delay and such default or delay continues for two working days (48 hours) after such notice was given,
- has made default in the completion of The Work, or any part thereof, within the completion date(s) of the Contract,
- has become insolvent,
- has committed an act of bankruptcy,
- has abandoned or discontinued prosecution of The Work,
- has made an assignment of the Contract without the required approval, or
- has otherwise failed to observe or perform any of the provisions of the Contract,
- the Department may take all or any portion of The Work out of the Contractors hands and may employ such means as seen fit to complete The Work.

38.2 Costs and Claims. Where The Work or any portion thereof has been taken out of the Contractor's hands under Subsection 38.1, Causes and Notices, all costs incurred by the Department as a result of the default, including the cost of completing The Work and repairing any defect or failure, will be deducted from any money due or which may become due to the Contractor. If the costs incurred by the Department exceed the sum which would have been payable under the Contract, then the Contractor, shall be liable and shall pay to the Department the amount of the excess up to the specified amount of the security deposit. The Contractor shall not have any claim for compensation or damages against the Department for any stoppage or delay caused by or resulting from The Work, or a portion of The Work having been taken out of the hands of the Contractor.

39.0 DEFECTS AND OMISSIONS.

39.1 Rectifying Defaults. Without restricting any warranty or guarantee either expressed in this agreement or implied or stipulated by law, the Contractor shall, at their own expense, warranty all work performed under the Contract, and rectify and make good any defect or fault or omission that appears in The Work within twelve (12) months or within such additional period of time stipulated in the Special Provisions or Standard Specification concerning particular portions of The Work from the date of the Engineer's Certificate of Final Estimate.

39.2 Notice to Contractor. If any defect, fault or omission appears in The Work and the Engineer is of the opinion that it is one which the Contractor, either under a warranty or guarantee either expressed in this agreement or implied or stipulated by law, is obliged to remedy and make good, the Engineer may direct the Contractor to remedy and make good the defect, fault or omission by giving notice to the Contractor of the existence of the defect, fault or omission and the notice shall specify the time within which the defect, fault or omission is to be rectified and made good.

39.3 Specified Time. The Contractor shall rectify and make good the defect, fault or omission described in a notice given pursuant to Subsection 39.2 within the time specified in the notice.

40.0 DEFECTIVE WORK AND MATERIAL. No material shall be used in The Work, or any portion thereof until it has been examined and approved of by the Engineer or their authorized representatives. All rejected materials shall be removed from the site of The Work and replaced with materials which are acceptable to the Engineer. Any work or materials which in the opinion of the Engineer, are not of the character, quality, dimensions, or design, required by the Plans and Specifications, and which, in the judgement of the Engineer, are otherwise or in any manner defective, imperfect, or insufficient, shall be replaced or remedied, when pointed out to the Contractor by the Engineer; and shall be made good and sufficient by the Contractor at their expense and to the satisfaction of the Engineer, who shall have found, and whose duty it shall be to have any defective work or materials taken out and rebuilt or replaced at the expense of the Contractor. Any omission by the Engineer to disapprove of or reject any insufficient or imperfect work at the time of any estimate shall not be deemed in acceptance of such work or material.

The Contractor shall, to the satisfaction of the Engineer, rectify any defects in The Works which may appear therein, or of which they shall receive notice from the Engineer and for which they may have been responsible, in the opinion of the Engineer, during the period of thirty days after the date of the final certificate of the completion of The Work. If the Contractor fails to renew any defective materials, or correct any defective quality of work within 24 hours after they has been instructed to do so by the Engineer, the Engineer may cause any such defective work or quality of work to be removed. The expense of such removal will be deducted from any moneys that may be due, or that may thereafter be or become due to the Contractor. The fact that any defective material or quality of work has been accepted previously by oversight of the Engineer or their representatives shall not be considered a valid reason for the Contractor's refusal to remove it or make it good when notified to do so.

41.0 ANNULMENT OF CONTRACT. In case the Contractor shall make default or delay in commencing, or in diligently executing any of The Works or portions thereof to be performed, or that may be ordered under this Contract, to the satisfaction of the Engineer, the Engineer may give written notice to the Contractor requiring them to put an end to such default or delay. Should such default or delay continue for six days after such notice shall have been given by the Engineer to the Contractor, or should the Contractor make default in the completion of The Work, or any portion thereof, within the time limited with respect thereto in or under requiring them to put an end to such default or delay. Should such default or delay continue for six days after such notice shall have been given by the Engineer to the Contractor, or should the Contractor make default in the completion of The Work, or any portion thereof, within the time limited with respect thereto in or under this Contract, or should the Contractor become insolvent, or abandon The Work, or make an assignment of this Contract without the consent required, or otherwise fail to observe and perform any of the provisions of the Contract, then in any of such cases, the Minister without any further authorization, may take all The Work out of the Contractor's hands and may employ such means as they may see fit to complete The Work. In such case the Contractor shall have no claim for any further payment in respect of work performed, but shall be chargeable with and shall remain liable for all loss and damage which may be suffered by reason of such default or delay, or the non-completion by the Contractor of The Work. No objection or claim shall be raised or made by the Contractor by reason, or on account of the ultimate cost of The Work so taken over, for any reason proving greater than, in the opinion of the Contractor, it should have been, and all materials, articles, and things whatsoever, and all machinery, tools, plant and equipment, and all rights, proprietary or otherwise, licenses, powers and privileges, whether relating to or effecting real estate or personal property, acquired, possessed or provided by the Contractor for the purposes of The Work, or by the Engineer under the provisions of this Contract shall remain and be the property of the Minister for all purposes incidental to the completion of The Work, and may be used, exercised and enjoyed by the Minister as fully to all intents and purposes connected with The Work as they might therefore have been used, exercised and enjoyed by the Contractor. The Minister may also at their option, sell or otherwise dispose of, at forced sale prices, or at public auction or private sale, or otherwise, the whole or any portion or number of such materials, articles, things, machinery, tools, plant and equipment at such price or prices as they may see fit, and retain the proceeds of any such sale or disposition and all other amounts then or thereafter due to the Contractor on account of, or in part satisfaction of any loss or damage which the Minister may or may have sustained by reason aforesaid.

42.0 CERTIFICATE OF SUBSTANTIAL PERFORMANCE. It is hereby agreed that this Contract is deemed to be Substantially Performed when The Work or improvement is ready for use or is being used for the purpose intended and when the value of The Work to be performed under the Contract is capable of completion or correction at a cost of not more than 2.5% of the Contract price.

When Substantial Performance has been reached, the Engineer is responsible for selecting the date and submission of a completed Certificate of Substantial Performance to the Construction Manager. The Construction Manager will process the Certificate for approval. The Engineer will send an approved copy of the Certificate to the Contractor. The date of the Substantial Performance shall mark the beginning of the warranty period. This date shall also mark the beginning of the sixty (60) day period, after which the holdbacks on payments due to the Contractor may be reduced to two and one half percent (2.5%).

With submission of the completed Certificate of Substantial Performance, the Engineer shall include an attachment describing details of The Work not yet performed, or corrective repairs required. A copy of the "Certificate of Substantial Performance" is included in Appendix A of the Standard Specification.

43.0 NO WAIVER. The Contractor agrees that no condoning, excusing, or overlooking by the Minister, or any person acting upon their behalf, or previous occasions, or breaches, or defaults, similar to that for which any action is taken, or power is exercised, or forfeiture is claimed or enforced against the Contractor, shall be taken as a waiver of any provision of the Contract, or as defeating, affecting, or prejudicing in any way the rights of the Minister under the Contract.

44.0 REFUSAL OF CONTRACTOR TO DO WORK. Should the Contractor neglect or refuse to do any work, matter or thing that they may be directed to do, or which may be necessary in order to complete The Work in a proper manner according to the Plans and Specifications, the Engineer may without further notice perform or do whatever in their judgement may be necessary. The entire cost shall be borne and paid by the Contractor, and may be deducted and paid out of any moneys which may be due or may thereafter become due the Contractor.

All machinery and other plant, materials, tools, equipment, articles and things whatsoever provided by the Contractor for The Works hereby contracted for and not rejected or condemned for any reason shall, from the time of their being so provided, become, and until the final completion of the said work, shall be and remain the property of the Minister for the purposes of the said work; and the same shall on no account be taken away or used or disposed of otherwise, except for the purpose of the said work, without the written permission of the Engineer; and the Minister shall not be answerable for any loss or damage whatsoever which may happen to such machinery or other plant, materials, tools, equipment, articles and things, provided that always, upon the completion of The Work and upon payment by the Contractor of all such moneys, if any, as shall be due from them to the Minister, such of the said machinery and other plant, materials and things, as shall not have been used and converted in The Works, and which remain undisposed of, shall upon demand be delivered up and returned to the Contractor in such condition, as they may then be in.

Whenever on this Contract, power or authority is given to the Minister, the Engineer or any person on behalf of the Minister to take any action consequent upon the happenings of any one of the events mentioned or referred to in the Contract, or upon the acts, defaults, neglects, delays, breaches, non-observance or non-performance by the Contractor in respect of The Works or any portion or details thereof, such powers or authorities may be exercised from time to time and not only in the event of the happenings of such contingencies before the time limited in this Contract for the completion of The Works, but also in the event of the same happenings after the time so limited in the case of the Contractor being permitted to further proceed with the execution of The Work.

45.0 POWER TO EMPLOY ADDITIONAL RESOURCES

45.1 Insufficient Materials and/or Equipment. Notwithstanding the obligation of the Contractor to complete the Contract within the time specified, where the Engineer is satisfied that the number of workers, equipment and/or materials used by the Contractor for the Contract are insufficient to complete the Contract within the time specified, the Engineer may, by written notice to the Contractor, require the Contractor to employ or provide such additional workers, equipment and/or materials as the Engineer may deem necessary to complete the Contract within the time specified at the expense of the Contractor.

45.2 Employment of Additional Workers, Equipment, Materials by Minister. Where the Engineer is satisfied that the slow rate of progress on the Contract is endangering the safety or health of any person or exposing part of it or public property to damage or destruction, the Engineer may either on behalf of the Minister or, if they sees fit as an agent or of account of the Contractor, but in either case at the expense of the Contractor, provide and employ such additional workers, equipment and/or materials as the Engineer thinks proper to diligently carry out the Contract, and may pay such additional workers such wages, and for such additional equipment and materials, respectively, such prices as the Engineer thinks proper. All such wages and prices respectively are thereupon at once to be paid by the Contractor or the same may be retained or deducted out of any sum that may then, or thereafter, become due from the Minister to the Contractor; and the Minister may use in the execution and advancement of the Contract not only the workers, equipment and materials so provided on their behalf, but also all such as may have been, or may be provided by, or on behalf of the Contractor.

46.0 SUBLETTING OR ASSIGNING OF CONTRACT. The Work under this Contract shall be performed by the Contractor, and by workers under the Contractor's immediate supervision and superintendence. The Contractor shall not, without the written consent of the Engineer, make any assignment of the Contract, or any subcontract for the execution of any of The Work hereby contracted for.

This clause does not apply to the furnishing of materials for the different parts of The Work, for which materials, however, the Contractor shall be held strictly responsible, and no excuse for the quality of the materials, or for the non-delivery of the same in good time by any Subcontractor, as affecting the progress of The Work, will be entertained. In no case shall any assignment or subcontract, even though duly consented to, relieve the Contractor from their liability under this Contract for the performance and completion of The Works hereby contracted for. The Contractor shall not assign any moneys due or accruing under the Contract under any circumstances.

47.0 CONTRACTOR LIABLE FOR RISKS. The Contractor shall assume all risks and contingencies in connection with The Work, and shall bear all loss or damage whatsoever, whether arising from storms, floods, fires, accidents or any other cause whatsoever, excluding Force Majeures, which may occur to The Work or any part thereof, during the progress of The Work and until the same shall be fully and finally completed and delivered up to and accepted by the Minister. If any such loss or damage shall occur before such final completion, delivery and acceptance of The Work, the Contractor shall immediately, at their expense, repair, restore and re-execute The Work so damaged within the specified time for completion. The Contractor must make good at their own expense all deficits and failures from any causes whatsoever, whether the same are due to negligence on their part, or on the part of their workers, or persons employed by the Contractor, or under their control, or due to bad quality of work; and the Contractor shall indemnify and save harmless the Minister from any and all claims, losses or damages in respect thereof.

48.0 CONTRACTOR LIABLE FOR DAMAGES. The Contractor, agents and all work persons and persons employed by the Contractor or under the Contractor's control, and all servants and agents of their Subcontractors, if any, shall use due care that no person or property is injured and that no rights are infringed in the prosecution of The Work. The Contractor shall be solely responsible for all damages, by whomsoever claimable, in respect of any injury to persons or to property of whatsoever description, and in respect of an infringement of any right, privilege or easement whatsoever, occasioned in the carrying on of The Work or any part thereof, or by any neglect, misfeasance or nonfeasance on the Contractor's part or on the part of any of their agents, workers or persons employed by them or under their control or any of their Subcontractors, their servants or agents, and shall at their own expense, make such temporary provisions as may be necessary to ensure the avoidance of any such damage, injury or infringement, and to prevent the interruption of, or damage or menace to, the traffic on any public or private road, and to secure to all persons and corporations the uninterrupted enjoyment of all their rights, in and during the performance of the said works. The Contractor shall indemnify and save harmless the Minister from and against all claim and demands, loss, costs, damages, actions, suits or other proceedings by whomsoever made, brought or prosecuted, in any manner based upon, occasioned by, or attributed to any such damage, injury or infringement.

49.0 CLAIMS AGAINST CONTRACTOR. The Contractor shall promptly pay for all labour, services and materials, in or about the construction of The Work; and all payments for such purposes, shall be made by the Contractor, at least as often as payments are made by the Minister to the Contractor. Payments to truckers employed in the hauling of materials used in the construction, shall be made bi-weekly with payment for one pay period made prior to the end of the following pay period.

Where there is no Labour and Materials Payment Bond that applies to the claim and a subcontractor or supplier claims not to have been paid the amount owing under Contract within 30 days after it is due, the subcontractor or supplier may file a notice of claim with the Minister within 60 days after the initial 30 day period. The Minister will give notice of the subcontractor or supplier's claim to the Contractor and retain the disputed amount until the claim is settled by the parties. If the Minister has not been advised within 60 days from the date of the notice of claim that the claim is settled by agreement, subject to an agreed upon dispute resolution process or that judicial proceedings have been commenced, the Minister will pay the disputed amount to the Contractor.

Before final settlement is made for work done and materials furnished under the Contract, the Contractor may be required to furnish evidence satisfactory to the Minister that the said work and all its parts are free and clear from all lawful claims or liens under any law, for labour, quality of work, material or otherwise; and that no claim then exists, in respect of which a claim or lien upon the said work could, or might attach. The Contractor shall indemnify and hold harmless the Minister, and all their property, from any and all kinds of liens, occurring from labour and services performed and materials furnished, or otherwise, and any of the same, in or about the said work. In the event the Minister consents in writing to any subcontract for the execution of any work hereby contracted for, the Contractor shall ensure that all accounts for labour, services and materials in or about the construction of that part of The Work are paid by the subcontractor and shall furnish for the Minister a certificate in writing that such accounts have been paid.

Proof of payment to subcontractors and suppliers shall be in the form of a Statutory Declaration provided by the Contractor to the Minister. The Statutory Declaration must be received by the Department before the second and subsequent monthly progress payments are advanced.

50.0 CLAIMS OF CONTRACTOR. It is intended that every allowance to which the Contractor is fairly entitled will be embraced in the Engineer's monthly certificate; but, should the Contractor at any time have claims of any description which they consider are not included in the said certificate, such claims must be made in writing to the Engineer within 30 days certificate, from which they consider the items of their claim to have been omitted, and in no case beyond the period of 60 days from the date of the practical completion of that portion of The Work, to which such claims apply. In default of the presentation of such claims within the time or times so limited, the Minister may treat such claims as absolutely barred. The Contractor in presenting claims of the kind referred to above must accompany them with satisfactory evidence of their accuracy, and the reasons for the claims. Where after the Tender closing date for this Contract, there is a change in the amount of Federal Excise Tax or Import Duties payable on materials placed or furnished or to be placed or furnished in The Work, the Department will increase or decrease Contract payments by the amount necessary to offset the effect of the Tax or Import Duties on this Contract. Claims by the Contractor for compensation to cover increased costs caused by the Tax or Import Duties must be submitted to the Engineer within 30 days after the Engineer's Certificate of Final Estimate is received by the Contractor. No claim submitted beyond the 30 day limit will be considered. Where the Contractor benefits from a change in the Tax or Import Duties, the Contractor shall submit to the Engineer a statement of such benefits. This statement must be provided within 30 days after the Engineer's Certificate of Final Estimate is signed. The Engineer reserves the right to make deductions from regular progress payments to account for any estimated benefits accrued to the Contractor from the Tax or Import Duties. Such deductions will be held pending receipt of the above mentioned statement itemizing the benefits which the Contractor has received from the Tax or Import Duties, at which time the final payment adjustment will be determined. (See also Division 1 Section 2 Paragraph 6 of these Specifications).

51.0 MINISTER COVENANTS TO PAY. In consideration of the faithful performance by the Contractor of all and singular the covenants, agreements and provisions of the Contract, the Minister hereby covenants and agrees with the Contractor that, on the full completion by the Contractor of The Work as specified in the Contract, within the time specified and limited for the final completion thereof, and to the entire satisfaction of the Engineer, to be evidence by the certificate of the Engineer in writing, the said Minister, will well and truly pay or cause to be paid to the Contractor the amount of the Contract price, being the actual quantities in the several items in the schedule of prices contained in the Tender at the unit prices or bulk sum, prices quoted by the Contractor. This amount paid to the Contractor as above shall include all and every kind of work, labour, superintendence, services, tools, implements, machinery, plant, materials, articles and things whatsoever necessary for the full execution and completion of The Work to the entire satisfaction of the Engineer. In case of dispute as to what work, labour, superintendence, services, tools, implements, machinery, plant, materials, articles and things are or are now so included, the decision of the Engineer shall be final and conclusive.

52.0 PAYMENTS. Cash payments equal to 90% of the total value as shown on the Financial (Progress Estimate) Report, as valued by the Engineer, will be made to the Contractor monthly, as The Work progresses, on the written certificate of the Engineer that The Work for, or on account of which the certificate is granted, has been duly executed to the Engineer’s satisfaction, and stating the value of such work as computed by them, and the said certificate, shall be a condition precedent to the right of the Contractor to be paid the said percentage, or any part thereof. The Engineer may, beginning sixty (60) days after the Contract is deemed to be substantially performed, as defined in Subsection 42.0, increase the cash payments to 97.5% of the value of The Work completed. No such monthly payment shall be construed to be an acceptance of any defective work or improper materials. Whenever The Work is finished, according to the Plans and Specifications the Engineer shall certify the final estimate which signifies that The Work is done to their satisfaction. Subject to the other provisions of this Contract the Minister will then pay to the Contractor within 60 days, but not before 30 days, after execution of the said final certificate the remainder which shall be found to be due, excepting therefore such sum or sums as may be lawfully deducted or retained under any of the provisions of the Contract. The written certificate of the Engineer certifying to the final completion of the said work to their entire satisfaction shall be a condition precedent to the right of the Contractor to receive or to be paid the balance due, or any part thereof. Proof of payment to subcontractors and suppliers shall be provided by the Contractor to the Minister. Proof of payment shall be in the form of a Statutory Declaration as included in Appendix A of these Specifications. The Statutory Declaration shall be received by the Department before the second and subsequent monthly progress payments are advanced. The right is reserved by the Minister to reject the whole or any part of The Work, should the said certificate be found to be inconsistent with the terms of the Contract, or otherwise improperly given. The Engineer's progress certificates, and the payment of progress estimates based upon the same, shall not be construed an acceptance or approval of The Work, but only as temporary advances to the Contractor. The Contractor shall be bound, notwithstanding such progress estimates, to well and truly complete, finish and hand over in good condition, and to the entire satisfaction of the Engineer, by the time specified and in accordance with the terms and conditions of the Specification, the whole of The Work included herein, and all the percentage retained by the Minister shall be retained by them, until the said full and satisfactory completion has been formally certified by the Engineer. No moneys payable, due or accruing under this Contract shall be assigned without the consent in writing of the Engineer.

53.0 FINAL PAYMENT. It is hereby agreed between the Parties hereto that the payment of the final amount due under the Contract, and the adjustment and payment of any bills that may be rendered for work done, in accordance with any alteration in or addition to the same, shall release the Minister from any and all claims or liability on account of work performed under the said Contract, or any alteration in, or addition to the same. It is further agreed that before final payment is made by the Department to the Contractor, the Contractor shall furnish the Department with a release on the Release Form attached to this Agreement and identified by the Contractor's signature thereon.

SIGNED, SEALED AND DELIVERED

IN WITNESS WHEREOF the Parties hereto have herewith cause These Presents to be signed, and sealed, on the day and year first above written.

By the Contractor in the Presence of

_____

_____
Contractor
Witness

SIGNED, SEALED AND DELIVERED
by the Minister in the Presence of

_____

_____
Minister
Witness

SECTION 4 – GENERAL PROVISIONS

1.0 CLEANING OF PREMISES. The Contractor shall upon completion of The Work remove all temporary structures and clear away all rubbish, surplus and waste materials remaining on or about The Work and place the premises in a neat and tidy condition satisfactory to the Engineer.

2.0 SANITARY PROVISIONS. All Contractors shall provide and maintain in a condition satisfactory to the Engineer all necessary accommodations for the use of their employees on The Work.

3.0 FIRE PROTECTION. The Contractor shall, at their own expense, take special precautions to prevent fire occurring in or about The Work, and employ their own workers, to the satisfaction and under the direction of the Engineer, in extinguishing all such fires which may occur. The Contractor shall observe and comply with all laws and regulations and instructions made and given, from time to time during construction, by the Engineer, with respect to fires and the prevention and extinguishing of fires, and shall pay all wages and other costs occasioned by reason of the observance or compliance with such regulations and instructions.

4.0 ACCOMMODATING TRAFFIC AND TRAFFIC CONTROL. Unless otherwise provided, the Contractor shall, at their own expense and without extra cost to the Minister, make suitable provision to accommodate all traffic, either pedestrian or vehicular over any part of the highway upon which work is being performed, in a manner satisfactory to the Engineer and shall arrange to keep two lanes of highway open to traffic at all times with the least amount of inconvenience to the travelling public. On upgrading work the subgrade shall be completed progressively in order that the various courses of gravel may follow in an orderly manner. The grading operation shall not precede the gravel operation by a distance greater than 1 kilometre and not more than 1 kilometre of the original travelled way shall be disrupted at any one time. Other work not affecting the original travelled way may proceed as directed by the Engineer.

Prior to closing down the operation on each working day, the Contractor shall ensure that the travelled way is capable of carrying traffic even under adverse conditions. The reconstructed travelled roadway is to be well maintained and graded on a daily basis by the Contractor as directed by the Engineer until the completion of the Contract.

Where in the opinion of the Engineer, it is desirable to:

- detour traffic via alternate highways because of construction work on a Contract and/or
- where short detours are required around excavations, partially built structures, etc., on work under Contract,

The Contractor is to be paid for the cost of construction and maintenance of the detour.

The Contractor is advised that construction signs for any Contract shall not be erected until immediately prior to the commencement of work.

The Contractor shall be responsible to provide and maintain all traffic control required on the Contract. Traffic Control shall be carried out in accordance with the Traffic Control Manual and as directed by the Engineer.

On any Contract, The Work Zone, consisting of The Work Area and Buffer Area, shall not exceed 1.5 km in length, unless otherwise authorized by the Engineer.

The Contractor shall carry out their work activities in such a manner to minimize traffic delays. The following maximum time delays to traffic shall be adhered to:

- An accumulative 20 minutes through the Contract limits, and
- 10 minutes through any one Work Zone.

The Contractor will be required to adjust work activities, minimize the length and/or number of Work Zone(s), to adhere to these limits.

During times of peak traffic volumes, should the limits not be met, the Contractor may be required to stop work activities and pull off the road until volumes permit restarting.

4.1 Personnel. The Contractor shall provide an Accredited Traffic Sign Supervisor, who has successfully completed the Temporary Workplace Traffic Control Training Course to be on site at <u>all</u> times when active construction is taking place, to ensure the dismantling of all temporary condition signs and devices that indicate to the road user that highway construction activities exist and also to ensure that proper traffic control procedures are carried out in accordance with the Traffic Control Manual.

The Contractor may, if so requested by the Engineer or other approved traffic authorities, be required to submit a list of workers to whom concerns about the condition of all or any, of the Traffic Control devices, required for the Contract, can be directed during non active construction periods.

4.2 Elements. Traffic Signs, drums and cones required for traffic control shall be supplied by the Contractor at no cost to the Department.

All TC-2 (ROAD WORK), TC-3 (SURVEY CREW), TC-21 (TRAFFIC CONTROL PERSON), TC21A (TRAFFIC CONTROL PERSON AHEAD) and TC-114 (OVERHEAD UTILITY WORK) signs used on any job shall be equipped by the Contractor with two flags (including flag holder), at no cost to the Department, as per the requirement of the Nova Scotia Temporary Workplace Traffic Control Manual. All signs shall be High Intensity reflectivity as per specification ASTM Type III (3).

The supply, handling, erection, placement and removal of all traffic control items shall be the responsibility of the Contractor. Such items may include, but not necessarily be limited to, the provision of traffic control persons; flashing light units; pilot vehicles; signs; cones; drums, including the maintenance of such devices during inactive construction periods. Traffic Control will not be paid for separately, and all associated costs shall be included in the unit price for other Tender items.

On low volume roads and low volume urban residential streets where a 360 degree amber light is required in the placement and dismantling of safety devices, the 360 degree amber light (and vehicle) shall be supplied by the Contractor at no cost to the Department.

Unless specified elsewhere in these provisions it shall be the Contractor's responsibility to erect and maintain all signs relative to any Contract to meet the requirements laid down in the Traffic Control Manual.

4.3 Traffic Control Markings. The Contractor is responsible for the supply, layout and installation of Department approved, reflective pre-marking tape, paint and/or reflective devices (Temporary Overlay Markers - TOMs) in such a manner that the finished pavement surface can be correctly striped for the various lanes using this pre-marking. The materials used for pre-marking shall be supplied and installed by the Contractor a maximum of twenty (20) metres apart on each line marked and with each mark being a minimum of 300 mm in length. Lines on cold planed, expanded asphalt stabilization, micro-surfaced and chip sealed surfaces shall be painted at ten (10) metre intervals, including an application of glass beads. TOMs shall be applied at forty (40) metre intervals. The Contractor is responsible for provision of a qualified surveyor to ensure that the pre-marking is installed in the original and correct locations or where otherwise directed by the Engineer. The Department shall supply necessary horizontal control points adjacent to the site.

The Contractor shall ensure that the roadway is properly marked as The Work progresses and all cold planed sections and/or newly surfaced road is pre-marked at the completion of the day’s operation, as described herein. Temporary pavement marking shall be clearly visible both day and night.

Should the pre-marking tape not adhere to the cold planed and/or newly treated surface, the Contractor shall use other means to adequately mark the roadway, such as painting the markings on the road.

The Contractor is responsible for the removal of the Temporary Overlay Markers between successive pavement courses as The Work progresses and from the finish course of pavement after painting.

The Department will verify correct installation of the pre-marking. Should the Department require to provide a surveyor to correct the pre-marking used for painting the various lane markings to the finished surface, the cost for provision of this surveyor shall be deducted from the sum due from the Minister to the Contractor for accepted work on the Contract.

5.0 REGISTERED WEIGHT AND AXLE WEIGHT. The maximum permitted weight on an axle, combination of axles, vehicle or combination of vehicles on any public Highway in Nova Scotia shall be in accordance with the Weights and Dimensions of Vehicle Regulations made under Section 191 of the Motor Vehicle Act, in effect at the time the vehicle (or axle) is in use.

6.0 WEIGHING PROCEDURES. The weighing procedures to be followed by Department weighers on Contract or Department work will be carried out on the basis of determining "Pay Load" only.

Trucks hauling on Department Contracts, weighed by Department weighers **will not be issued a weight slip if the total gross is in excess of the vehicle's registered weight.**

A sign which reads as follows **must be prominently displayed on each scale house so that it can be easily read**

by the Truck Driver.

THIS SCALE WILL DETERMINE PAY LOAD ONLY. NO WEIGHT SLIP WILL BE ISSUED IF THE TOTAL LOAD EXCEEDS REGISTERED WEIGHT. THE DRIVER IS LEGALLY RESPONSIBLE IF THE AXLE WEIGHT ON THEIR VEHICLE EXCEEDS THE PERMITTED MAXIMUM AXLE WEIGHT. AXLE WEIGHT WILL BE CHECKED PERIODICALLY BY MOTOR VEHICLE INSPECTORS.

The scale house sign is available from the Department Sign Shop at Truro as Number 05.

The truck driver is legally responsible to ensure that the legal axle limits are not exceeded.

If possible, the truck axles or axle groups should be weighed during the first several days of the trucking operation and the gross load should be near the permitted registered weight.

To assist the trucker in meeting the legal regulations Department weighers will:

6.1 Initial Weighing of Axles. Weigh axles or axle groups on each loaded vehicle once during the initial phase of the truck operation and advise the trucker of the axle loadings.

6.2 Additional Weighing of Axles. Following the initial axle weighing, subsequent weighing of axles will be done at the trucker's request. The trucker is to be advised accordingly.

6.3 WEIGHING WILL BE PERMITTED UNDER THE FOLLOWING CONDITIONS:

- **Single Weighing Procedure**. Prior to proceeding onto the scale platform, vehicles shall come to a complete stop. The vehicle shall then be driven onto the platform at a minimum speed and shall be gradually stopped centred on the platform. Before weighing, the brakes shall be released to insure there is no displacement of the scale components.
- **Split Weighing Procedures.** The practice of split weighing, for purpose of payment, is not permitted on Department Contracts.

7.0 TRUCK WEIGH SCALE

7.1 Contractors Responsibility to Supply Scales. It is the Contractor's responsibility to supply, install, inspect and maintain in good working order, truck weigh scales approved for use by Measurement Canada Industry Canada for weighing various materials such as gravels, asphalt concrete, rock fill, etc. on Department Contracts. All costs related to supply, installation, maintenance and inspection of scales shall be included in the unit price for the various materials to be weighed. Such scales will be tested occasionally by Measurement Canada Industry Canada and/or the Engineer or their staff. The Contractor shall supply scales of sufficient length to accommodate weighing of all trucks, used on the Contract, by the single weighing procedure.

Contractors have the option of combining scales of the same make and model. Once this is done the Contractor must have these scales checked and certified by Measurement Canada Industry Canada as they are considered new scales. All costs associated with checking of these scales will be the responsibility of the Contractor.

If the vehicle scales from which Department weigh slips will be issued are not located between the pit and a public road or if the asphalt plant is equipped with certified hopper scales, the Contractor must provide a suitable weighing mechanism (including weigher), at the pit so vehicle weights can be checked. Approximate weights can be determined by using loader scales or by split weighing on a smaller set of scales located at the pit.

If scales in a pit are located more than 500 metres from the point of loading, a dump location must be available at the scales. If a truck is required to travel more than 500 metres within the pit to dump excess material, the Contractor must reimburse the trucker for their travelling (tonne-km) and carrying of this excess material.

The scale and scale house shall comply with the requirements of the Occupational Health and Safety Act and Regulations.

7.2 Contractors Responsibility to Supply Test Weights. It is the Contractor's responsibility to supply, at their expense, 10,000 kg of certified test weights to carry out the necessary testing.

Test weights shall be inspected and certified for use by Measurement Canada Industry Canada at least once annually. The inspection shall be done prior to use of the weights in any particular year. If at any time it is suspected that the mass of the test weights has changed through damage or otherwise, they may be rejected by the Engineer until such

time as they are re-certified. It is the Contractor's responsibility to make all arrangements and bear all costs with respect to the certification of the weights. The certification shall be carried out at facilities as specified by Measurement Canada Industry Canada.

7.3 Scale Beam Calibration. The scale beam or other mass indicating device shall be calibrated in metric units, as frequent as required.

7.4 Scale Testing and Certification. All truck weigh scales shall be tested and certified by an independent scale inspection company. The company must have at its disposal a minimum of 10 000 kg or 20 000 lbs of test standards with proof of current Measurement Canada Industry Canada calibration certification. The test standards must all be of the same unit of measure, imperial or metric. Mixing weights of different units of measure for the calibration will not be permitted. Normally, at two (2) week intervals during the period the scales are in use, Department personnel will perform re-inspection of the scales. It shall be the responsibility of the Contractor to provide personnel to handle test weights and to make adjustments if required during the testing procedure. The Contractor shall also make available a loaded tandem truck to be used during the test procedure, all at no cost to the Department.

Measurement Canada Industry Canada may conduct unscheduled inspections at any time. If during the process of carrying out this unscheduled inspection, the scales are non-verified or seized due to measurement errors, a re-inspection and certification by Measurement Canada Industry Canada must be performed before the scales may be used for issuing weigh slips. All costs associated with having the scales re-inspected by Measurement Canada Industry Canada are at the Contractor’s expense.

The Contractor is responsible for arranging for inspection of the vehicle scales and/or asphalt plant hopper scales for accuracy and compliance with the Weights and Measurements Act and Regulations. The Contractor shall hire an independent scale inspection company to perform the inspection. Portable scales shall be inspected prior to being used for the first time and for each subsequent set-up, if the scale is moved in the construction season. Permanent scales shall be inspected once every twelve months.

All costs associated with set-up and initial inspection of a scale are the responsibility of the Contractor. A dated report and sticker from the independent scale company shall be posted at the scale. Copies of the inspection report shall be forwarded to Measurement Canada Industry Canada and to the Department’s Engineer. The Engineer reserves the right to perform periodic inspections on the scale. Upon request of the Engineer the Contractor shall engage an independent scale company to verify calibration of a scale. The Contractor has a maximum of seven days in order to re-inspect the scale. If the scale is in compliance the Department will pay the cost of the re-inspection. If the scale does not comply, the Contractor is responsible for the cost of the re-inspection and any costs associated with repairing the scale. Any costs associated with delays as a result of the re-inspection are the responsibility of the Contractor.

7.5 Requirements of Portable Scale Houses. A weatherproof scale house shall be provided by the Contractor. It shall have a minimum floor area of 2.25 square metres, a ceiling height of 2.15 metres and a minimum of 0.91 metres free area measured from the back wall. Safe access via steps, etc. shall be provided to the doorway, which shall open outwards (access to meet all required codes). The door shall have a locking device and a key shall be provided to the weigher. The door shall be located on either of the walls perpendicular to the scale platform or the wall parallel to, and furthest from, the scale platform. Two sliding windows with screens shall be provided; one on the end of the scale house to provide a clear view of vehicles as they approach the scale platform; the other on the scale platform side of the scale house from which the weigher can transfer the weigh ticket to the truck driver. A storage area for a water container shall be provided (container and water shall be supplied by the Department) as well as an adequate stool and work surface for a ticket machine. Adequate heat and light sources shall be provided when required (both to meet all required codes). Toilet facilities must be readily available.

The floors of the scale house shall be insulated and the side walls shall be insulated if the scales are in use outside of the period May 15 to September 15. If dust is a problem, measures shall be taken to suppress it around the scale house or an adequate ventilation or filter system to handle dust shall be provided. Vehicles shall be weighed in such a manner that exhaust fumes are directed away from the scale house.

The certification of scales will depend, in part, on the following conditions being met:

- The beam stand shall be rigid and supported to prevent springing under load and vibrating when a loaded vehicle drives onto the scale platform.
- The connecting rod between the weigh beam and the lever system shall be plumb and have ample clearance where it passes through the scale house floor.
- The various components of the weigh beam including pivots, bearings and beam notches shall be clean and free from rust and wear. The weight indication must be readable. The nibs, dogs or pawls shall engage

positively in the beam notches. The balance ball shall be secured in position when the beam is brought to balance.
- The counter balance hangers shall not have loose material or easily removable weights hung from them.
- The scale operator shall have an unobstructed view of the scale platform.

7.6 Scale Deck. The scale deck shall have an easy free floating movement with ample clearance at the ends and sides. The end walls or abutments shall be adequately separated to prevent displaced ramp materials from rolling into the pit and packing about the levers.

7 .7 Curb Rails and Guide Post System. All scales used on Department Contracts shall comply with the following:

- Curb Rail. Where the width of the scale platform permits, a curb rail system shall be installed on both sides of the platform. The curb rail system shall consist of either:
  i. 200 mm x 200 mm timbers bullnosed on the inside or;
  ii 200 mm high steel rail welded to the scale beam.
- Single Rail and Guide Posts: Where the width of the scale platform does not permit the installation of a curb rail system on both sides of the platform, a single rail shall be installed on the scale house side. Guide posts shall be installed on the other side. If guide posts are used they shall be placed at both ends of the scale and aligned with the edge of the platform and preferably be constructed of minimum 75 mm diameter steel pipe or equivalent.
- Guide Posts. Where a scale house is located more than 3.7 m from an elevated scale platform, there shall be four guide posts installed at the corners of the scales as a guide for the truck drivers in lieu of a curb rail system.
- Curb Rail Not Required. Where the scale platform is flush with the ground level or other surfaces, a curb rail system is not required.

7.8 Foundations. Scales shall be level at all times in order to operate properly. The type of foundation required will depend largely on the soil condition and length of time of intended use in that location.

Shims and other means of height adjustment shall be made of any suitable material that resists compression at least as well as the main support structure, and shall cover the entire area under the lever stands or load cell bases to ensure that the scale remains stable and level under normal conditions of use of the scale.

7.9 Drainage. Proper drainage of the area surrounding the pit shall be provided. This may require ditching and/or drainage tiles, etc. depending on the length of time the scale is to remain on the site. Water shall not be allowed to undermine the foundation. The area under the scale shall be free of all debris, old roots, sand, gravel, etc.

7.10 Approach Ramps. The approach ramp and off ramp shall be level (0 degree incline) for at least the length of the longest vehicle being weighed. The area under the approach ramps shall be free of all debris, old roots, sand, gravel, etc. and the ramps shall be firm and well compacted to prevent settling. The ramps shall be inspected regularly and any ruts or settlement shall be corrected immediately.

- “zero balance"
- "sensitivity" (load discrimination)
- "preliminary performance" test which indicates the general condition of the scale and its installation.
- "strain load test"

7.11 In General. Any additional requirements contained in legislation will take precedent over requirements contained herein.

Table 1-4-1
AGREEMENT BETWEEN DEPARTMENT OF TRANSPORTATION AND INFRASTRUCTURE RENEWAL AND MEASUREMENT CANADA REGARDING SCALE TOLERANCES, IN SERVICE LIMITS OF ERROR

Verification scale interval	2 kg	5 kg	10 kg	20 kg
In-Service LOE in Terms of Verification Scale Interval	Load in kg	Load in kg	Load in kg	Load in kg
1	0 - 1000	0 - 2500	0 - 5000	0 - 10000
2	+1000 - 2600	+2500 - 6500	+5000 - 13000	+10000 - 26000
3	+2600 - 4200	+6500 - 10500	+13000 - 21000	+26000 - 42000
4	+4200 - 5800	+10500 - 14500	+21000 - 29000	+42000 - 58000
5	+5800 - 7400	+14500 - 18500	+29000 - 37000	+58000 - 74000
6	+7400 - 9000	+18500 - 22500	+37000 - 45000	+74000 - 90000
7	+9000 - 10600	+22500 - 26500	+45000 - 53000	+90000 - 106000
8	+10600 - 12200	+26500 - 30500	+53000 - 61000	+106000 - 122000
9	+12200 - 13800	+30500 - 34500	+61000 - 69000	+122000 - 138000
10	+13800 - 15400	+34500 - 38500	+69000 - 77000	+138000 - 154000
11	+15400 - 17000	+38500 - 42500	+77000 - 85000	+154000 - 170000
12	+17000 - 18600	+42500 - 46500	+85000 - 93000	+170000 - 186000
13	+18600 - 20200	+46500 - 50500	+93000 - 101000	+186000 - 202000
14	+20200 - 21800	+50500 - 54500	+101000 - 109000	+202000 - 218000
15	+21800 - 23400	+54500 - 58500	+109000 - 117000	+218000 - 234000
16	+23400 - 25000	+58500 - 62500	+117000 - 125000	+234000 - 250000
17	+25000 - 26600	+62500 - 66500	+125000 - 133000	+350000 - 266000
18	+26600 - 28200	+66500 - 70500	+133000 - 141000	+266000 - 282000
19	+28200 - 29800	+70500 - 74500	+141000 - 149000	+282000 - 298000
20	+29800 - 31400	+74500 - 78500	+149000 - 157000	+298000 - 314000
21	+31400 - 33000	+78500 - 82500	+157000 - 165000	+314000 - 330000
22	+ 33000	+82500	+165000	+330000

The in-service limits of error that apply to a Class IIIHD weighing device are ±1 e where the load is not less than zero and not more than 500 verification scale intervals, and where the load exceeds 500 verification scale intervals, calculated by adding ±1 e for each additional 800 verification scale intervals or less, to a maximum of ± 22 e.

8.0 BORROW, GRAVEL AND PLANT MIX AGGREGATE PITS AND PLANT SITES. All excavation work carried on outside of normal highway embankments for the purpose of supplying common, rock, gravels, and plant mix aggregates, or for providing a hot mix plant site, shall be done under the direct supervision and with prior approval of the Engineer. Except in areas where it is impractical to do so, all such excavations shall not be visible from the Highway.

The Work shall be carried out in such a way that all waste material from clearing, grubbing, screening, and material

selection operations will be disposed of properly in a manner that will not present an unsightly appearance or endanger or pollute the adjacent lands, rivers, lakes, or other water courses.

On completion of The Work, the perimeter of the area shall be uniformly sloped, all waste material including boulders, grubbing, asphalt spillage, etc., shall be properly disposed of and the entire excavation area shall be uniformly graded and adequately drained in preparation for possible future seeding by the Department, all in accordance with the Pit and Quarry Regulations in effect at the time of the award of the contract and to the satisfaction of the Engineer.

9.0 OCCUPATIONAL HEALTH AND SAFETY ACT. It is mandatory on all Department Contracts that the Contractor immediately report all incidents that have involved contact with electrical power lines, poles supporting electrical power lines, or other lines or poles that could impact electrical power lines to Nova Scotia Power Inc. and/or Aliant as applicable and also the Nova Scotia Department of Labour and Workforce Development and the Project Engineer for the Contract. If an accident occurs involving electrical power and/or communication lines, the Contractor shall appoint a representative to serve on a Joint Use Accident/Incident Investigation Committee.

In the event that the Engineer or their representative gives notice to the Contractor that they are in non-compliance with the Occupational Health and Safety Act or Regulations, or bring to their attention a safety hazard that poses an imminent danger or serious bodily injury to workers, or the public in the vicinity of the work site, the Contractor shall take immediate action to rectify the situation as quickly as possible. The Engineer or their representative has full authority to take any actions necessary including full work stoppage, to rectify the problem in the event the Contractor fails to act.

Any acts or omissions under the Occupational Health and Safety Act or Regulations or otherwise by the Contractor or its subcontractor, agents, or employees, that result in the interference, delay or stopping of The Work, shall not give rise to any liability on the part of NSTIR to the Contractor or any of its subcontractors, or agents or employees for any injuries, losses, claims, costs or expenses.

It shall be the Contractor's responsibility to become familiar with the requirements of the current Occupational Health and Safety Act of Nova Scotia and shall conduct their work so as to conform to the Act.

Copies of the Occupational Health and Safety Act and the Regulations may be purchased through:

Service Nova Scotia and Municipal Relations PO Box 637, Halifax, N. S. B3J 2T3
Phone No. 424-7580 or 1-800-526-6575
Internet or e-mail: www.gov.ns.ca. (Select link to Government Publications) or publications@gov.ns.ca

10.0 BLASTING

10.1 Blasting Near Watercourses. Blasting in or near watercourses shall receive approval from the Department of Fisheries and Oceans and shall be in accordance with the “Guidelines for Use of Explosives in Canadian Fisheries Waters” (DFO; April 1993).

10.2 Occupational Health and Safety and Other Regulations. All blasting carried out on the Contract shall be in accordance with the Regulations made pursuant to the Occupational Health and Safety Act, Chapter 320 of the Revised Statutes of Nova Scotia. The requirements as set out in the Occupational Health and Safety Act are deemed to be minimum requirements and the Contractor shall conduct their operations in such a manner so as to comply with any and all other Act(s) or Regulations in effect at the time of blasting.

10.3 Claims for Damages. It shall be the responsibility of the Contractor to satisfy all claims for damages as a result of blasting.

10.4 Public Notification. The Contractor or their agent shall notify the general public through radio or news media that blasting will be taking place in a particular area and the anticipated duration of work shall be specified.

10.5 Prerequisites Required Before Blasting Permitted. No blasting or use or storage of explosives shall be permitted on this Contract until the Contractor has provided proof of the following to the Engineer:

- That the blaster has a valid “Blaster’s Certificate”
- That the Contractor has procured any blasting permit specific to the Contract required by any jurisdiction.
- That the Contractor has in effect, adequate insurance with reasonable deductible to cover any anticipated loss that may occur through claims or otherwise that may occur.
- That the Contractor has conducted a pre-blast survey of any structures in the area that may be affected by the blasting.

The Contractor shall provide a copy of the blast design to the Engineer, if requested to do so by the Engineer, before a particular blast is made.

10.6 Delays in Traffic / Damage to Pavement. The Contractor shall ensure that the amount of rock that may be blown onto the existing pavement is minimized and that the time of blasting is such to provide minimum delays to the travelling public. The Contractor shall have adequate and appropriate equipment available near the site of the blast to remove any rock that may be blown onto the roadway in such a manner to avoid damage to the pavement and, in a timely fashion, to minimize delays to traffic. The Contractor shall be responsible and satisfy all claims for damage to property of the Provincial Crown including, but not limited to, the roadway.

10.7 Compliance Monitoring. The Contractor shall retain a qualified consultant to monitor ground vibration and air shock waves of all blasts. Upon request, the monitoring results shall be provided to the Engineer within 48 hours of the blast.

10.8 Magnitude of Blast. Blasting is to be done in a manner that all three components of ground vibrations shall not exceed 12.5 mm/sec (0.5 in./sec) and air concussion as measured by peak over pressure shall not exceed 0.003 lbs/sq.in. or 128 decibels as measured in the ground adjacent to the nearest structure and any other structure where it is anticipated the values will be higher than at the nearest structure.

10.9 Cost. All costs associated with blasting as described herein shall be considered incidental to The Work involved with Tender pay items such as, Solid Rock Excavation, Foundation Excavation Solid Rock, etc.

11.0 DISPUTE RESOLUTION FOR ASPHALT CONCRETE SEGREGATION. Asphalt Concrete shall be placed in accordance with the contract specification and shall be free form segregation. Segregated areas shall be removed by cold milling the full width of the lane and full depth of the lift in which the work is being performed. The asphalt concrete mix used to replace the segregated material shall be the same mix type and thickness as that removed. All costs associated with this work shall be borne by the Contractor. The Department has assigned designated technical personnel who will be contracted by the Engineer in the event of a dispute between the Engineer and the Contractor with respect to the identification and removal of segregated areas. One or more of the designated personnel will review the areas in question with the Engineer and Contractor's representative within 48 hours of notification by the Engineer. The decision of the Department's designated personnel, with respect to the required action, will be final.

SECTION 5 - ENVIRONMENTAL PROTECTION

In general, Nova Scotia Transportation and Infrastructure Renewal (TIR) is committed to the construction and maintenance of Highways in a manner which is protective of the environment including maintaining water quality through erosion and sediment control, saving and reusing topsoil, and minimizing disturbance to land use, wildlife and habitat.

1.0 ENVIRONMENTAL PROTECTION. It shall be the Contractor's responsibility to become familiar with the requirements of the current Nova Scotia Environment Act (1995) and Regulations pursuant to the Act and shall therefore, conduct The Work so as to conform to the Act.

- The Contractor shall be in conformance with all applicable environmental protection legislation and general construction practices during the execution of all items of work described in the Tender documents. This work shall also include all temporary and permanent works for construction of structures and their approaches.
- Where necessary and as applicable, the Contractor shall have a person on site, who has successfully met the requirements for training in the Erosion and Sediment control Course required by the Department of Transportation and Infrastructure Renewal and has a Certificate in Training (after having completed the Erosion and Sediment Control workshop offered by the Centre for Water Resource Studies (CWRS), Dalhousie University, or equivalent as approved by the Department).
- The Contractor shall provide the Engineer a written acknowledgement that they have read and understood the terms and conditions of all governmental approvals, authorizations and permits, other letters of advice, and Contract specific Environmental Protection Plans (EPPs), as applicable to the Contract. The written acknowledgement shall be provided to the Engineer at least 48 hours prior to the preconstruction Meeting and prior to commencement of any construction.
- At the preconstruction meeting the Contractor and Engineer shall review the permits and authorizations necessary to carry out the work and the Erosion and Sediment Control Plan and Culvert Mitigation Plan(s) specific to the Contract work.
- If the Contractor is responsible for securing the permits and authorizations, a copy of all permits and authorizations shall be given to the Engineer prior to commencing work on that portion of the Contract.
- If the Contractor is responsible for preparing the Erosion and Sediment Control Plan and/or Culvert Mitigation Plan(s), these plans must be approved by the Engineer prior to the commencement of work.
- **Work Conformance.** All work shall conform to the "Nova Scotia Watercourse Alteration Specifications" (1997) which can be found in Appendix B.
- **Contamination of Streams.** The Contractor shall refrain from any action that may cause contaminated run-off to reach lakes and streams.
- **Gravel Removal from Rivers.** In order to avoid situations whereby Contractors on highway work might destroy valuable fish spawning grounds by removing gravel from riverbeds, no work shall be done in, or material removed from the bed of a stream without the specific consent of the Project Engineer.
- **Chemicals for Dust Control.** The Contractor shall not be permitted to use chemicals for dust control unless approved in writing by the Engineer.
- **Contractor Installations.** The Contractor shall not be permitted to construct machinery maintenance depots, refuelling stations, storage yards, or any type of installation, as determined by the Engineer, that could possibly cause contamination to streams or lakes through the disposal of human waste, oil, grease or other deleterious material.
- **Contaminated Material.** Any material contaminated by the accidental spilling of fuel, anti-freeze, oil or grease that, in the judgement of the Engineer and consistent with legislation, may cause contamination to streams or lakes, shall be loaded and transported to an area where it can be disposed of at a site approved by Nova Scotia Environment and the Nova Scotia Department of Labour and Workforce Development, all at the expense of the Contractor.
- **Asphalt Concrete and Portland Cement Concrete.** The provincial Solid Waste – Resource Management Regulations do not regulate asphalt concrete and Portland cement concrete, however, when disposed of off-site, the waste disposal site is required to be approved by the municipality. No approvals are required if the material is disposed of within the Department's right-of-way (i.e. embankment fills). Where possible, the Project Engineer shall direct the Contractor to employ reasonable and practical means to dispose of asphalt concrete and Portland cement concrete within the highway right-of-way (ie embankments) so as to avoid materials from being directed to a Construction and Demolition Disposal site.

2.0 EROSION PREVENTION. On Highway Contracts, erosion prevention should be the first line of defence. The amount and duration of exposed soil should be kept to a minimum.

3.0 SEDIMENT CONTROL. Perimeter controls shall be in place prior to the commencement of any grubbing. Sediment shall not be allowed to leave the site.

- **Sediment Barriers.** Sediment Barriers shall be used to keep sediment, the product of erosion, on site. They shall be considered as temporary perimeter controls to intercept sediment laden sheet flow runoff before it enters a watercourse or as it leaves the construction site. (Division 7, Section 1)
- **Flow Checks.** Flow checks shall be constructed across roadside drainage ditches throughout cut sections and adjacent to inlets and outlets of culverts, or as otherwise directed by the Engineer. Flow checks shall be placed so as to reduce the channel velocity, promote the deposition of suspended sediment and provide a trap for bed load material. (Division 7, Section 2)
- **Settlement Ponds.** Where larger flows of water or drainage areas are encountered, settlement ponds may be required. These ponds shall be designed taking into account the following considerations: soil type, exposed area, slope, anticipated rainfall, and duration of exposure to allow for the retention of sediment laden runoff for a sufficient time so that sediment may settle out. Settlement ponds shall be constructed where and as directed by the Engineer using departmental guidelines. (Division 7, Section 3)

4.0 BORROW AND GRAVEL PITS. All borrow material and gravel pit or quarry aggregates shall be approved by Nova Scotia Environment and the Nova Scotia Department of Labour and Workforce Development.

5.0 MINERALIZED ROCK EXCAVATION. Should mineralized rock be encountered on the contract, the “Guidelines for Development on Slates in Nova Scotia” prepared by the Nova Scotia Department of Environment and Labour and Environment Canada, dated April 1991, and the Nova Scotia Department of Transportation and Public Works’ “Approval Process for Pits Containing Slates” shall be followed. If an acid production/consumption test is required, the test shall be carried out using the BC Research Test Method. These documents may be obtained at the Highway Planning and Design Office, Department of Transportation and Infrastructure Renewal, P.O. Box 186, Halifax, N.S., B3J 2N2 or may be picked up at that office located in the Johnston Building, 1672 Granville Street, Halifax, NS, B3J 3Z8.

6.0 MANAGEMENT OF SURPLUS BRUSH, SLASH OR NON-MERCHANTABLE TIMBER. The Nova Scotia Department of Transportation and Infrastructure Renewal has developed guidelines for the disposal of surplus brush, slash or non-merchantable timber. In all cases, disposal shall adhere to Federal, Provincial, and Municipal laws and regulations.

6.1 Chipping.

- Where chips are stockpiled, large piles, as defined by the Engineer are to be avoided.
- Where chips are not being used as mulch, chips are to be disposed of as directed by the Engineer. Chips shall not be disposed of where they may run into a watercourse or block ditches, culverts, drains, etc.

6.2 Municipal Land Fills. Disposal of materials at specific Municipal landfills will depend on the waste stream allowed by individual landfills and determined by the Solid Waste Management Disposal Regulations which identifies banned materials.

6.3 Brush Cuttings. If brush cuttings are light they may be left on the right-of-way (eg. clearing for additional visibility for a driveway). If brush cuttings are heavy and unsightly they shall be removed from the ROW.

6.4 Burying. In contract work brush (also stumps and roots) may be buried in pits and/or in the toe of slopes and outside the theoretical slope, and dressed, if approved by the Engineer.

7.0 WORK PROGRESSION SCHEDULE

7.1 Purpose. The purpose of this clause is to ensure that construction in any work area is carried out continuously from initiation to completion to ensure orderly progression of the work, and to offer effective protection of the environment by minimizing exposed soil on construction sites.

7.2 Work Areas. A "work area" is an area, defined by station chainages, the limits of which shall be established by the Contractor prior to commencement of work. The size of the work area shall be determined by the Contractor's ability to complete all grading work, to the lines and grades shown on the plans, seeding and final slope protection within 30 calendar days. Work will commence with the start of grubbing in that work area, and will be considered complete when the specified cover material is applied (ie. straw/hay mulch, erosion control blanket, sod, clear stone, if required).

The work area shall be determined by the Contractor with the approval of the Engineer.

Grubbing work necessary for the installation of culverts is exempt from the Work Progression Schedule.
The placement of subbase gravels on the subgrade shall not be considered a condition of the Work Progression Schedule unless required by Regulatory Agencies and specified in the Special Provisions.

The following table shall be completed and approved by the Engineer prior to commencement of any grubbing.

Table 1.5.1 - Work Areas - Work Progression

Area #	Area bounded by			Timing constraints	
	Station	**Offset Left**	**Offset Right**	**Time interval from commencement of contract**	**Timing Constraints (seasonal, based on approvals, etc)**

7.3 Unforseen Circumstances. If conditions are encountered in one of the active work areas which requires extra care or work which the Contractor is unable to proceed with at that time, the Contractor will be allowed to open up additional work area(s) only after the original work area is temporarily protected, ie., straw/hay mulch. Payment for temporary protection will be dependent on the circumstances and shall be at the discretion of the Engineer.

If unforeseen circumstances occur, the 30 calendar day period may be extended. This shall be at the discretion of the Engineer. This extension must be accompanied by a written report outlining the need for the extension.

7.4 Non-Compliance. Once the grubbing operation within a specific work area has begun, the operation shall be continuous from grubbing through to the placement of seed (including fertilizer, lime) and final slope protection, if required. If after 30 calendar days the above described work is not completed, then the Contractor will be considered in violation of the contract and work shall proceed in the following fashion:

- No additional work area(s) will be allowed to commence until the uncompleted work areas are completed.
- All work areas shall be immediately protected with straw/hay mulch at the Contractor's expense and at the discretion of the Engineer.

Table 1.5.2 Example Table

Area #	Area bounded by			Timing constraints	
	Station	**Offset Left**	**Offset Right**	**Time interval from commencement of contract to completion**	**Permitted Time Period for Work**
1	2+750 3+500	0 - 40 m 0 - 40 m		Day 1-30 June 20 - July 20	Commencement no earlier than June 1. Completion no later than September 30.
2	3+800 4+900	ROW limit ROW limit	ROW limit ROW limit	Day 20 - 50 July 10 - Aug 9	No constraint
3	5+000 6+200	ROW limit ROW limit	30 - 50 m 30 - 50 m	Day 25 - 55 July 15 - Aug 14	Commencement no earlier than June 1. Completion no later than September 30.
4	6+200 7+000	ROW limit ROW limit	ROW limit ROW limit	Day 50 - 80 Aug 9 - Sept 9	Rock to be placed in lake only between Aug 15 and Sept 30

If in the Engineer's judgement, there is non-compliance with erosion and sediment control provisions, corrective action may require a shutdown of construction activities, until such time as the non-compliance is corrected to the satisfaction of the Engineer. No claims by the Contractor will be entertained because of the shutdown of the Contract or a portion of the Contract.

8.0 INSPECTIONS AND MAINTENANCE. Routine inspections of Best Management Practice (BMP) are necessary to check on their overall effectiveness. Site inspections are required every 7 days and within 24 hours after each rain event. Identifying problems and then scheduling BMP repair or replacement on a regular basis can prevent failures.

8.1 Rain Events. Perform routine inspections and maintenance weekly and after rain events. To avoid undetected failures, inspect during a rain event to evaluate BMP effectiveness and identify locations that need repair.

8.2 Removal of Temporary Erosion Control Structures. After all contributing drainage areas have final stabilization, remove temporary or damaged BMPs. Sediment traps can be stabilized to provide storm water control or permanently filled in.

8.3 Sediment Removal. Sediment removal must be scheduled for perimeter sediment control BMPs when accumulated material reaches $^1/_3$ of the height, or replace with a functional BMP within 24 hours of discovery. For temporary basins, sediment must be removed when accumulated material reaches ½ the storage volume of a basin or ½ the height of the riser.

Checklist of important reference documents:

- ❒ The Nova Scotia Environment Act and Regulations pursuant to the Act.
- ❒ The TIR Standard Specification for Highway Construction and Maintenance
- ❒ The Erosion and Sedimentation Control Handbook for Construction Sites
- ❒ TIR Environmental Management Program Manual
- ❒ CWRS Erosion and Sediment Control Course and Binder

9.0 Disposal of Waste Materials. Contractors are hereby advised that all waste materials, as follows but not limited to, (eg. Asphalt concrete mixtures, joints, guard rail, guard rail posts, waste resulting from spills etc.), from Department Contracts shall be disposed of by the Contractor in an area approved for disposal of these materials.

SECTION 1 - CLEARING

1.0 DESCRIPTION

Clearing shall consist of the cutting and disposal of all trees, brush, slashings and fallen timber. Areas to be cleared shall be indicated on the plans or designated by the Engineer.

2.0 REFERENCES

All reference standards shall be current issue or latest revision at the first date of tender advertisement. This specification refers to the following standards, specifications or publications: C Division 1 Section 5, Environmental Protection

3.0 SUBMISSIONS AND DESIGN REQUIREMENTS

4.0 MATERIALS

5.0 CONSTRUCTION METHODS

Merchantable timber shall be cut, salvaged and become the property of the Contractor. Salvaged material shall be removed from the right-of-way before the completion date of the Contract.

5.1 Clearing. Clearing shall consist of removing or cutting of all trees within the right-of-way to the limits as directed by the Engineer. No clearing in wetlands shall proceed until Nova Scotia Department of Environment (NSE) Wetland Alteration application approval is secured by the Department. The Contractor shall not clear within the boundaries of the buffer zones unless approved by the Department. The maximum cut off height shall be 300 mm above the ground level or at such heights as approved by the Engineer. For the purpose of this provision all timber with a minimum butt diameter of 100 mm and a length of 2.5 m shall be considered as merchantable timber. Removal of trees in the vicinity of power and utility lines shall be performed by trained tree fellers certified by the utility company to perform such work. The utility shall verify the qualifications of the personnel and approve felling methods prior to the Contractor clearing near power lines.

Following approved disposal of merchantable timber, the remaining non-salvageable material such as standing trees, brush, slashings, limbs and fallen branches shall be cut and disposed of by, chipping or burying as discussed in Division 1 Section 5. The maximum chip size shall be no more than 300 mm long by 75 mm in thickness. Chips may be disposed of off the site if approved by the Engineer or shall be distributed on the ground within the Right of Way in areas designated by the Engineer. If approved by the Engineer, cutting and disposal of merchantable timber and non-salvageable material may proceed in areas where culverts and necessary environmental controls have yet to be installed.

5.2 Special Clearing. Special clearing shall apply in areas where the merchantable timber has been removed prior to the commencement of the contract. Clearing shall consist of removal of the remaining nonsalvageable material such as standing trees, brush, slashings, limbs, fallen branches and other surface litter. This material shall be cut and disposed of by chipping or burying.

5.3 Removal of Isolated or Ornamental Trees. Isolated or ornamental trees shall be as designated by the Engineer and shall be removed where and as directed. No trees shall be removed without the approval of the Engineer. Removal of isolated or ornamental trees shall consist of the removal of the total tree including stumps and roots. Removal shall be done by carefully excavating the tree and limiting damage to the surrounding property where appropriate. The Contractor shall be responsible for the restoration and cleanup of the surrounding property where and as directed by and to the satisfaction of the Engineer.

5.4 Relocation of Ornamental Trees or Shrubs. Ornamental trees and shrubs shall be relocated as directed by the Engineer. Relocation shall be done by carefully excavating the tree or shrub so as to keep intact as much of the root system as possible and relocating the tree or shrub in an excavation large enough to accommodate the root system. The relocated trees or shrubs shall be carefully backfilled and tamped by hand with suitable material which may require the addition of water, peat moss, topsoil, fertilizer or sand as directed by the Engineer.

5.5 Environmental Protection Practices. In addition to the requirements stated below, all work shall be done in accordance with Division 1 Section 5 of the Department's Standard Specification. An on-site meeting shall be held between the Department's representative and the Contractor prior to any cutting. Representatives from the Department

of Fisheries and Oceans (DFO), NSE may be required as well. Meetings will be held as required throughout the duration of the work.

5.5.1 Protection of Watercourses and Wetlands. A watercourse is defined as the bed and shore of every river, stream, lake, creek, pond, spring, lagoon or natural body of water, and the water therein, within the jurisdiction of the Province, whether it contains water or not, and all groundwater. A wetland is defined as land that is saturated or covered with water long enough to promote vegetation and biological activity which are adapted to a wet environment. Three principles shall be observed to protect watercourses and wetlands during the duration of the project.

Water crossing shall only be permitted when access by any other means is impractical or impossible. Activities near watercourses shall be designed and performed to avoid erosion and sedimentation both during and after construction activities, and Crossings shall not result in a restriction or blockage of natural drainage and/or to fish passage.

Equipment shall not enter watercourses. Temporary bridges shall be used where crossing of watercourses is necessary. Temporary bridges are defined as portable structures placed across a watercourse for a period of time ranging from less than one day to one or more weeks. The size of the temporary bridge shall be such that it will not result in a restriction or blockage of natural drainage and/or to fish passage. Crossing of temporary bridges by equipment shall be kept to a minimum. Temporary bridges shall be removed when the work in the area is completed. All temporary bridge locations must first be approved by NSE. The Contractor shall be responsible for all approval applications related to temporary bridges utilized for crossing watercourses. No claims or extensions will be considered by the Department, to obtain the necessary approval for use of a temporary bridge by the Contractor.

Temporary bridges are not required in circumstances where a watercourse channel is not defined, and is vegetated. A brush mat shall be used to protect the area, and NSE staff shall approve this alternative method of crossing. The general mitigation for water crossings are as follows. Crossings shall be restricted to a single location and shall be constructed perpendicular to the watercourse and at a narrow point on the watercourse. The crossing site shall exhibit a stable soil type and gentle approach slopes. In buffer zones all slashing and construction debris shall be removed by hand and disposed of by chipping, above the high water mark and away from the watercourse. Trees shall be felled away from the watercourse during the clearing operation. Trees felled within the high water mark shall be removed immediately.

Approaches to water crossings shall be stabilized with brush mats and banks stabilized by placement of a vegetation mat, where necessary. When bank or approach slopes are composed of erodible soil; rip rap, geotextiles and other stabilization measures shall be used.

Under no circumstances shall the soil be disturbed within 10 meters of any watercourse, or within the buffer zones indicated by the Engineer. These areas are designated as environmentally sensitive. The trees within this buffer zone shall be cleared by hand (ie. no machinery other than chain saws). Trees shall be felled away from the watercourse. This buffer zone distance may be increased/decreased by the Engineer at specific culvert locations. Removal of merchantable timber and non salvageable material from the buffer zones shall be in such a manner that the surface is not broken and the underlying soil is not exposed. There shall be no skidding of trees across a watercourse. It may be necessary for the Contractor to use floatation tires on vehicles, properly sized for the vehicles so that the ground surface is not broken. All clearing related activities near watercourses shall be undertaken in such a manner that erosion and sedimentation, both during and following the work, is avoided. The Contractor is hereby advised that the clearing operation can be suspended by the Department, at any time, where environmental concerns warrant.

5.5.2 Areas of Concern. The Contractor is advised that clearing shall not be carried out within 20 metres of Wetlands unless otherwise directed by the Engineer.

5.5.3 Wildlife and Wildlife Habitat. The Department or its Contractors shall make every reasonable effort not to disrupt wildlife. Firearms are strictly prohibited in work vehicles and within the right-of-way. In wetland habitats the work shall be undertaken in such a manner that minimizes habitat disturbance and does not result in the alteration of wetland hydrology. If the crossing of a wetland is unavoidable, then the measures for crossing watercourses shall be utilized. Some species of migratory birds may nest in this area during the winter months. The Migratory Bird Convention Act and Regulations apply to this work. If any nesting birds are found, the Contractor shall be responsible for immediately contacting the Engineer.

5.6 Land Use. Every effort shall be taken to carry out the work in a manner which causes minimum inconvenience to the landowner. Prior to starting work, the Engineer will familiarize the Contractor with any landowner agreements in order to implement the Department's commitments.

6.0 QUALITY CONTROL / QUALITY ASSURANCE

7.0 METHOD OF MEASUREMENT

The quantity of Clearing and Special Clearing to be paid for under this section shall be the number of hectares cleared determined by horizontal measurement. Removed or relocated ornamental trees and shrubs to be paid for under this section shall be measured as individual units.

8.0 BASIS OF PAYMENT

Clearing and Special Clearing will be paid for at the contract unit bid price per hectare. The unit bid price shall be full compensation for clearing the areas designated by the Engineer and shall include transportation of material to, and acquisition of, the approved disposal sites. The Contractor shall supply all equipment, plant, labour, tools and all incidentals necessary to complete the work.

Payment for removal of isolated trees and ornamental trees will be made at the contract unit price for each tree. This price shall be full compensation for removal and disposal of the tree, stump and roots including supply of all equipment, labour, tools and incidentals necessary to complete the work.

Payment for relocation of ornamental trees or shrubs will be made at the contract unit price for each tree or shrub. This price shall be full compensation for relocation of the tree or shrub including supply of all equipment, labour, tools and incidentals necessary to complete the work.

9.0 WARRANTY

SECTION 2 - GRUBBING

1.0 DESCRIPTION

Grubbing shall consist of the removal and disposal of all stumps, roots, downed timber, embedded logs, humus, root mat and topsoil from areas of excavations and embankments or other areas as directed by the Engineer. Areas to be grubbed shall be indicated on the plans or designated by the Engineer.

2.0 REFERENCES

All reference standards shall be current issue or latest revision at the first date of tender advertisement. This specification refers to the following standards, specifications or publications:

- Division 7 Section 8, Topsoil
- Division 7 Section 11, Water Control at Culvert Extensions or Installations

3.0 SUBMISSIONS AND DESIGN REQUIREMENTS

4.0 MATERIALS

5.0 CONSTRUCTION METHODS

Grubbing shall be carried out by either of the procedures defined as Grubbing or Special Grubbing. Unless otherwise directed by the Engineer, grubbing shall not be required under embankments of 1.5 m or more. Generally, the areas to be grubbed shall extend to a width of 2 m outside of excavation and embankment slope lines. In no case shall any portion of the debris resulting from grubbing be placed in or under embankments or along the top of excavations. Push-offs shall not be permitted.

For areas where the Engineer has specified that topsoil is to be salvaged refer to Division 7 Section 8 of these specifications.

Areas used for the disposal of material removed in the grubbing operation shall not obstruct, contaminate or cause siltation of any streams or impair the drainage of the area and shall be left in a condition satisfactory to the Engineer.

Grubbing of areas for the installation of drainage structures shall be as detailed in Division 7 Section 11 of these specifications.

5.1 Grubbing. Material resulting from the grubbing operation may be loaded and transported to a disposal area outside the right-of-way. The disposal area shall be supplied by the Contractor and approved by the Engineer. If approved by the Engineer, the debris resulting from grubbing may be buried in pits beyond the toe of slope. No stumps, roots, embedded logs or other objectionable material shall be used to dress slopes.

5.2 Special Grubbing. Special Grubbing shall be carried out only on cultivated land or other barren land where no clearing is required. The Contractor shall provide areas for the disposal of the excavated material. The disposal areas shall be approved by the Engineer.

The Contractor shall haul the excavated material resulting from the Special Grubbing operation up to the free haul limit of 300 m to place this material within the right-of-way if so directed by the Engineer.

Material resulting from the grubbing operation shall not be disposed of by windrowing within the right-of-way boundary.

If approved by the Engineer the excavated material resulting from Special Grubbing may be used to flatten the embankment slopes after the theoretical slope has been achieved.

6.0 QUALITY CONTROL / QUALITY ASSURANCE

7.0 METHOD OF MEASUREMENT

The quantity of Grubbing and Special Grubbing to be paid for under this section shall be the number of hectares grubbed determined by horizontal measurement.

8.0 BASIS OF PAYMENT

Grubbing and Special Grubbing will be paid for at the appropriate contract unit price per hectare. The unit bid price shall be full compensation for grubbing the areas designated by the Engineer. Topsoil and other excavated material removed in the grubbing operation shall be paid for as Roadway and Drainage Excavation Common. The Contractor shall supply all equipment, plant, labour, tools, and incidentals necessary to complete the work.

Material resulting from Grubbing or Special Grubbing shall be transported to the disposal area at no extra cost to the Department.

The Contractor will not be paid overhaul for transportation of material resulting from the Grubbing or Special Grubbing operation where the material is transported to a disposal area provided by the Contractor whether inside or outside the right-of-way boundary.

The Contractor will be paid for overhaul, at the overhaul rates listed in Appendix C, where material resulting from the Special Grubbing operation is hauled over 600 m and placed within the right-of-way as directed by the Engineer.

9.0 WARRANTY

SECTION 3 - ROADWAY AND DRAINAGE EXCAVATION

1.0 DESCRIPTION

Roadway and Drainage Excavation shall consist of excavating, transporting or disposing of all materials taken from within the limits of the work except Borrow and other excavation not included in this specification. The work shall include all excavation necessary to construct or alter side ditches, off-take ditches, catch-water ditches and inlet or outlet ditches to drainage structures. The work shall also include the sloping and shaping necessary to prepare, alter, construct and complete embankments, shoulders, gutters, ditches, roadway and driveway intersections to the required alignment, grade and typical cross-sections shown as on the Plans or as directed by the Engineer.

2.0 REFERENCES

All reference standards shall be current issue or latest revision at the first date of tender advertisement. This specification refers to the following standards, specifications or publications:

- Division 2 Section 5, Borrow
- Division 2 Section 4, Disposal of Surplus Material
- Division 7 Section 5 - Hydroseeding
- Appendix A
- Drawing S-2009-018

3.0 SUBMISSIONS AND DESIGN REQUIREMENTS

4.0 MATERIALS

5.0 CONSTRUCTION METHODS

5.1 General. All suitable materials removed from the excavation shall be used as far as practicable in the construction of embankments as directed by the Engineer. All breakage and slides shall be removed by the Contractor and disposed of as directed. Ditches and waterways shall be excavated to the depth, width and grade as shown on the plans or as directed by the Engineer. No excavated material shall be wasted without the approval of the Engineer. When material is to be wasted it shall be disposed of as approved by the Engineer. During construction the ditches shall be maintained in such condition that the roadway will be well drained at all times.

5.2 Solid Rock Excavation. Solid Rock excavation shall consist of excavating and removing rock insitu and all Boulders measuring 1 m^3 or greater in volume. Subsurface boulders 1 m^3 or greater in volume are classified as Solid Rock and this quantity shall be deducted from the Common Excavation quantity.

No undrained pockets shall be left in the rock surface. A material satisfactory to the Engineer shall be used to backfill the roadway to the subgrade elevation. All loose or shattered fragments of rock shall be removed from the roadway slopes. Excavated rock or waste from the excavation shall not be left outside the tops of the roadway slopes. Where depth permits, Solid Rock Excavation shall be used to construct embankments, otherwise it shall be disposed of as approved by the Engineer.

5.3 Swamp Excavation. Swamp Excavation shall consist of the excavation and disposal of peat, black muck or humus encountered in swamp or marsh areas.

If approved by the Engineer, excavated swamp material may be disposed of within the right-of-way. Such material shall be trimmed and left in a neat condition to the approval of the Engineer. Backfill on the areas from which Swamp Excavation has been carried out shall consist of approved material, and such backfilling shall follow excavation operations as directed by the Engineer.

It shall be the responsibility of the Contractor to ensure that the full depth of swamp is removed. In the event that the Department questions whether or not all of the swamp material has been removed from beneath the roadway, the Department will arrange for a subsurface investigation (drilling) to be carried out in the disputed area(s). If the investigation indicates that swamp material remains beneath the roadway, the Contractor shall be responsible for locating and removing all remaining swamp material and properly re-establishing fill placement in the affected area(s) to the satisfaction of the Engineer, and at no cost to the Department. If the investigation indicates that no swamp material remains beneath the roadway, all costs associated with the investigation will be borne by the Department.
In the event that the Contractor disputes the quantities calculated (based on soundings), the Department will arrange

for a subsurface investigation (drilling) to be carried out in the disputed area. If the investigation indicates that the quantity paid (based on soundings) is correct, all costs associated with the investigation shall be borne by the Contractor. If the investigation indicates that the pay quantity (based on soundings) is in error, the actual pay quantity will be negotiated accordingly and all costs associated with the investigation will be borne by the Department.

5.4 Common Excavation. All excavated material other than Solid Rock or Swamp Excavation shall be classed as Common Excavation.

5.4.1 Cleaning of Ditches. Cleaning of ditches shall include excavation to a width not exceeding two times the distance measured from the existing shoulder to the centre of the ditch and to a maximum depth of 300 mm, or as directed by the Engineer. Hydroseeding shall be in accordance with Department Specification, Division 7 Section 5 to cover all areas that are disturbed by the ditching operation shall be carried out as directed by the Engineer.

Ditching shall include hand cleaning of the inlet and outlet end of culverts blocked or partially blocked during the ditching operation.

5.4.2 Disposal of Surplus Material. During highway construction activities, the Contractor may be required to dispose of surplus ditching and/or excavated material. The surplus material may be disposed of in the following manner:

- on the Contract right-of-way as directed by the Engineer, or
- with the approval of the Engineer, off the Contract right-of-way at a disposal site obtained by the Contractor for disposal of these materials.

When a property owner (including the Contractor's property) is the receiver of surplus material excavated from the Department's rights-of-way during the course of contracted activities, the Contractor is responsible to have the property owner sign and date a Release (copy contained in Appendix "A") which holds the Department free from all claims associated with the delivery and unloading of the excavated material. The Contractor shall also sign the Release and provide the Engineer with copies of the signed release.

The Engineer will provide the Contractor with blank Release forms. The completed forms shall be returned to the Engineer before disposing of the surplus material.

6.0 QUALITY CONTROL / QUALITY ASSURANCE

7.0 METHOD OF MEASUREMENT

7.1 General. The quantity to be paid for under this item shall be the number of cubic metres of excavated material as shown on the cross-section sheets between the original ground line, as cross-sectioned before grubbing operations have started, and the theoretical line.

The Contractor is required to excavate to within 0.5 m of the theoretical backslope line in order to be paid for the excavation. If the Contractor excavates beyond the theoretical line no additional payment will be made for this material excavated. If the Contractor excavates beyond the 0.5 m tolerance (measured horizontally) they may be required to replace this material at the discretion of the Engineer.

Within the limits to be surfaced, where rock excavation is required, the Contractor shall undercut the rock excavation to a depth of 0.5 m ± 0.1 m. No payment will be made for material excavated beyond 0.5 m below the subgrade elevation. If the Contractor excavates to within ± 0.1 m of this defined plane they will be paid to the defined plane. If the Contractor excavates beyond the defined plane no additional payment will be made for this material excavated.

7.2 Rock. Whenever Solid Rock is encountered the Contractor shall strip the area of earth within the slopes and notify the Engineer in order that proper measurements or cross-sections may be made. No allowance will be made for Solid Rock excavated before such measurements or cross-sections have been made.

7.3 Swamp Excavation. The depth of swamp excavation shall be determined by soundings taken before the swamp is excavated. All swamp material shall be removed from beneath the roadway embankment. The Department will make available for viewing by the Contractor data concerning soundings for swamps identified in the work. Unless otherwise directed by the Engineer the outer limit of the swamp excavation shall be bounded by a vertical line measured one half the distance between the two lines defined below:

- lines extending vertically to the bottom of the swamp from the point where the theoretical slope line meets the top of the swamp, and

- lines extending vertically to the top of the swamp from the point where the theoretical slope line meets the bottom of the swamp, as shown on drawing S-2009-018.

7.4 Other Common Excavation. On paving, repaving and upgrading contracts the quantities excavated shall be computed by the average end area method. The area to be used for the computations shall be the greater of:

- the area shown on the cross-section sheets between the original position of the ground line before the ditching operation started and the lines of the completed and accepted excavation.
- an area determined by the width of the excavation measured horizontally on the cross-section at grade level by 300 mm in depth.
- cleaning of ditches shall be measured by the linear metre measured parallel to the centre line of the roadway.

8.0 BASIS OF PAYMENT

8.1 General. Roadway and Drainage Excavation will be paid for under one of the following three classes:

- Solid Rock Excavation
- Swamp Excavation
- Common Excavation

The volume of Roadway and Drainage Excavation measured as provided above will be paid for at the contract unit price bid for Solid Rock Excavation, Swamp Excavation or Common Excavation, as the case may be, which prices shall be full compensation for the excavation, hauling (exclusive of overhaul), the formation of embankments (exclusive of compaction), trimming of slopes, disposal of surplus and waste materials, preparation and completion of subgrade, shoulders and roadway, and the furnishing of all equipment, tools, labour and incidentals necessary to complete the work, except the displacement of swamp by blasting which will be paid for as Extra Work.

In rock and common excavations, no payment will be made for material excavated beyond the defined plane outside the theoretical slopes except as detailed in Division 2 Section 5 of these specifications. If the Contractor excavates to within ± 0.5 m (measured horizontally) of the theoretical line they will be paid to the theoretical line.

Payment for all swamp excavation quantities and associated work will be paid based on the theoretical cross sections and limits as detailed in Subsection 7.3. The quantities shall be calculated by the Engineer and agreed upon (in writing) by the Contractor prior to any work being performed at the location(s) involved. In the event that additional quantities of swamp excavation are encountered the Contractor shall immediately contact the Engineer. Work shall not progress until the additional quantities are approved by the Engineer.

Payment for ditching shall be per linear metre and shall be full compensation for all materials, equipment, plant, labour, including hydroseeding, and incidentals necessary to complete the work as herein specified.
The disposal of surplus excavated material will not be paid as a separate item, but shall be included in the Contract unit bid prices for items in the Contract.

8.2 Overhaul General. This item shall include the transportation of "Roadway and Drainage Excavation" to embankment sites or other selected points over distances exceeding and exclusive of the established free haul distance of 300 m. All costs up to the free haul distance shall be included in the contract unit price per cubic metre for the class of excavation involved.

Material taken from excavation and used in embankments and selected material, hauled a distance greater than 300 m, when so directed by the Engineer, shall be paid for at the Standard Overhaul Rates for excavation.

8.2.1 Designated Overhaul. It may be necessary to move selected "Roadway and Drainage Excavation" from a designated area to a designated embankment or other site as directed by the Engineer. In this instance overhaul beyond the 300 m free haul distance will be computed separately from cross sections taken before and after placement of the material. No allowance will be made for selected material moved before cross sections have been made.

Haul

300 - 599 m	600 - 899 m
900 - 1199 m	1200 - 1499 m
1500 - 1799 m	1800 - 3199 m
3200 - 4799 m	4800 - 6399 m

8.2.2 Ordinary Overhaul. After proper deduction has been made for material placed within the free haul distance and selected material if any, the quantity of embankment excavation placed beyond the free haul distance of 300 m shall be classified as overhaul and calculated by the Mass Diagram Method.

These distances shall be measured along the centre-line of the main roadway which is under construction and any additional haul due to circuitry of travel will not be considered.

9.0 WARRANTY

SECTION 4 - DISPOSAL OF SURPLUS MATERIAL

1.0 DESCRIPTION

Surplus material includes all excavated material, unusable or otherwise, which is not required in the work.

2.0 REFERENCES

All reference standards shall be current issue or latest revision at the first date of tender advertisement. This specification refers to the following standards, specifications or publications:

- Division 2 Section 2, Grubbing
- Division 2 Section 3, Roadway and Drainage Excavation
- Division 2 Section 12, Foundation Excavation
- Division 2 Section 13, Foundation Excavation for Bridges

3.0 SUBMISSIONS AND DESIGN REQUIREMENTS

4.0 MATERIALS

5.0 CONSTRUCTION METHODS

Surplus material shall be used to uniformly widen embankments, flatten slopes or be deposited in such other areas and for such purposes as directed by the Engineer. No excavated material shall be wasted without the approval of the Engineer. When such material is to be wasted it shall be placed such that it presents a neat appearance and shall not adversely affect abutting property. In no case shall material be deposited above the grade of the completed roadway unless approved in writing by the Engineer.

6.0 QUALITY CONTROL / QUALITY ASSURANCE

7.0 METHOD OF MEASUREMENT

8.0 BASIS OF PAYMENT

The work prescribed in this section will not be paid for directly but shall be considered incidental to the Basis of Payment pertaining to Division 2 Sections 2, 3, 12 and 13.

9.0 WARRANTY

SECTION 5 - BORROW

1.0 DESCRIPTION

Borrow is the additional material required for embankment construction when there is insufficient useable material available from the excavation. Borrow shall consist of useable material and shall be secured outside or inside of the highway right-of-way as approved by the Engineer.

2.0 REFERENCES

All reference standards shall be current issue or latest revision at the first date of tender advertisement. This specification refers to the following standards, specifications or publications:

- Division 2 Section 1, Clearing
- Division 2 Section 2, Grubbing

3.0 SUBMISSIONS AND DESIGN REQUIREMENTS

The Contractor shall notify the Engineer of all proposed sources of Borrow. The Contractor shall have received approval from the Engineer prior to using material from these sources.

4.0 MATERIALS

5.0 CONSTRUCTION METHODS

The lands and right-of-way required for all Borrow obtained outside the limits of the highway shall be furnished by the Contractor. The Borrow pits shall be cleared and grubbed at the Contractor's expense to the approval of the Engineer. Borrow pits shall be excavated to regular lines to permit accurate measurement. Borrow pits shall be left in a neat condition with uniform slopes and the area within the slopes suitably graded and drained to the approval of the Engineer.

5.1 Side Borrow. Side Borrow may be taken by the Contractor from areas immediately outside the theoretical roadway slopes in excavations only with the prior approval of the Engineer. Where such Side Borrow is taken the outer slopes shall be finished parallel to those specified for the outer slopes of the roadway or as approved by the Engineer. The Department will allow the Contractor to obtain suitable Side Borrow from within the limits of the highway right-of-way without charge. Clearing and grubbing within the highway right of way shall be as detailed in Division 2, Section 1 and Section 2, except that no payment will be made for clearing and grubbing of areas where Side Borrow is taken.

6.0 QUALITY CONTROL / QUALITY ASSURANCE

7.0 METHOD OF MEASUREMENT

7.1 Borrow Pits. The quantity to be paid for under this section shall be the number of cubic metres of excavated Borrow material, as shown on the cross-sections, between the lines of the grubbed ground and the lines of the completed Borrow excavation. The volume of unusable boulders in Borrow pits shall be deducted from the volume of Borrow to be paid. Computation shall be by the average end area method. The Contractor shall notify the Engineer sufficiently in advance of Borrow removal to permit the measurement of the Borrow pit area. Any material removed from Borrow pits before such measurements have been made will not be paid for. If the Contractor excavates or places more Borrow material than is required, the quantity of material excavated in excess of the quantity required, shall be deducted from the amount of Borrow measured.

7.2 Side Borrow

7.2.1 Side Borrow Approved Prior to Road Cut. In areas where the Department has approved the acquisition of Side Borrow before the roadway excavation has begun, material removed beyond the theoretical slope shall be considered Side Borrow.

7.2.3. Material Removed From the 0.5 m Overcut Plane. In areas where the Department has not approved the acquisition of Side Borrow but some material was inadvertently removed beyond a plane parallel to and measured 0.5 m horizontally from the theoretical slope, and where the Department has benefited from the use of this material beyond the plane, then material removed beyond the plane will be considered Side Borrow. This would not apply in the case

where the Contractor was advised before the material was removed that it would not be considered Side Borrow.

7.2.3 Side Borrow Approved After Road Cut. In areas where the Department approves the acquisition of Side Borrow after removal of roadway excavation beyond the theoretical slope has begun, material removed beyond the actual excavation completed at the time of approval (but in no case inside the theoretical side slope) will be considered Side Borrow.

8.0 BASIS OF PAYMENT

The volume measured as detailed above will be paid for at the contract unit price bid per cubic metre of Borrow, which price shall be full compensation for the clearing, grubbing, excavating, placing, site reclamation and the furnishing of all materials, equipment, labour, and incidentals necessary to complete the work. No classification other than Borrow shall be allowed and only material placed in the work will be paid for.

9.0 WARRANTY

SECTION 6 - SUBGRADE

1.0 DESCRIPTION

In an embankment the Subgrade is defined as all approved material between the bottom of the excavation and the top of the completed embankment grade prior to the placement of gravels. In an excavation the Subgrade is defined as the compacted material below the approved grade, prior to the placement of gravels, to a depth of 300 mm.

2.0 REFERENCES

All reference standards shall be current issue or latest revision at the first date of tender advertisement. This specification refers to the following standards, specifications or publications:

- Division 2 Section 2, Grubbing
- Division 2 Section 3, Roadway and Drainage Excavation
- Division 2 Section 5, Borrow
- Division 2 Section 8, Compaction
- Division 2 Section 11, Fine Grading

3.0 SUBMISSIONS AND DESIGN REQUIREMENTS

4.0 MATERIALS

5.0 CONSTRUCTION METHODS

After all unsuitable material has been removed and all drainage structures have been placed, the subgrade shall be constructed to the lines, grades and cross sections as shown on the plans or as approved by the Engineer. All excavation and compaction shall be carried out in accordance with Division 2 Sections 3 and 8.

6.0 QUALITY CONTROL / QUALITY ASSURANCE

7.0 METHOD OF MEASUREMENT

8.0 BASIS OF PAYMENT

The work described under this section will not be paid for directly, but shall be considered as incidental to the Basis of Payment pertaining to Division 2 Sections 2, 3, 5, 8 and 11.

9.0 WARRANTY

SECTION 7 - SHOULDERS

1.0 DESCRIPTION

Shoulders shall be built and compacted to the lines, grades and cross-sections as shown on the contract drawings or as directed by the Engineer.

2.0 REFERENCES

All reference standards shall be current issue or latest revision at the first date of tender advertisement. This specification refers to the following standards, specifications or publications:

- Division 3 Section 2, Gravel Type 1, 1S, 2 & M
- Division 3 Section 5, Compaction of Gravels

3.0 SUBMISSIONS AND DESIGN REQUIREMENTS

4.0 MATERIALS

Gravel for shoulders shall be Type 1S as detailed in Division 3 Section 2 or as approved by the Engineer.

5.0 CONSTRUCTION METHODS

Gravels shall be applied directly to the shoulders by means of an approved side delivery shoulder spreader. Spreading or placing by end dumping of gravels on the pavement shall not be permitted. The shoulder shall be graded such that the outside edges of the shoulder, including the rounding, appear neat and uniform to the satisfaction of the Engineer.

Compaction of gravel for shoulders shall be as detailed in Division 3 Section 5 or as approved by the Engineer.

Where the roadway is open to the public the gravelling of shoulders shall not fall behind the paving/repaving operation by more than 3 days or 5 km. At the end of the working week shouldering shall be within 3 km of the paving. Where the roadway is not open to the public the time and distance constraints noted above shall not apply unless directed by the Engineer

6.0 QUALITY CONTROL / QUALITY ASSURANCE

7.0 METHOD OF MEASUREMENT

8.0 BASIS OF PAYMENT

The work described under this section will not be paid for directly but shall be included in the basis of payment items pertaining to Division 3 Section 2. Any material placed in Shoulders in excess of the quantities required will not be paid for and shall be removed at the Contractor's expense.

9.0 WARRANTY

SECTION 8 - COMPACTION

1.0 DESCRIPTION

Compaction is the work involved in consolidating to specified density material as placed in embankments and also that material at the top of subgrade in areas of excavation. The subgrade shall conform with the lines, grades, and cross-sections shown on the plans, or as directed by the Engineer after specified density has been obtained.

2.0 REFERENCES

All reference standards shall be current issue or latest revision at the first date of tender advertisement. This specification refers to the following standards, specifications or publications:

- ASTM D 698, Standard Proctor Test
- Division 2 Section 9, Water for Compaction & Dust Control

3.0 SUBMISSIONS AND DESIGN STANDARDS

4.0 MATERIALS

5.0 CONSTRUCTION METHODS

All material placed in subgrade shall be spread and bladed smooth in successive uniform layers, not to exceed 200 mm in compacted depth to the full width of the cross-section. Layers greater than 200 mm may be permitted by the Engineer providing specified density is obtained.

Embankments constructed principally of rock shall be placed in successive uniform loose layers not exceeding in depth the approximate average size of the larger rock, but limited to a maximum of 1 m. The maximum dimension of rock placed in the embankments shall not exceed 1 m. The rock shall not be dumped in place, but shall be distributed by suitable means within the embankment such that the interstices around the rock are filled with fine material.

Each layer shall be compacted to a minimum of 95% of the Standard Proctor dry density or the applicable Control Strip Density. The upper 300 mm of the subgrade shall be compacted in 150 mm layers to a minimum of 98% of the Standard Proctor dry density or the Control Strip Density. Unless otherwise approved by the Engineer, moisture content of the material shall be within ± 2% of its optimum moisture content as determined by Standard Proctor Density test.

Sidehill embankments may be constructed by dumping successive loads in uniformly distributed layers until the embankment is wide enough to permit the use of compaction equipment, after which the remainder of the embankment shall be compacted as specified.

When the original ground will not support the weight of the compaction equipment, the lower part of the embankment may be constructed by dumping successive loads in uniformly distributed layers of a thickness not greater than that necessary to support the equipment, after which the remainder of the embankment shall be compacted as specified.

5.1 Test Methods. All testing to ensure conformance to specification requirements shall be carried out by the Engineer or representative.

For material containing less than 30% oversize (retained on 20 mm sieve) the test method shall be Standard Proctor Test - ASTM D 698.

The maximum dry density for material containing more than 30% oversize shall be determined using the method prescribed herein as "Control Strip".

5.2 Control Strip Method. A Control Strip is a lift of material constructed on a 200 m section, minimum 3 m wide, of prepared surface selected by the Engineer. A maximum dry density, "Control density", shall be is established on the lift of material using the equipment and method of compaction as prescribed herein for construction of a Control Strip.
A Control Strip shall be constructed at the beginning of work. One or more Control Strips shall be constructed for each lift placed and also when any change in the character of the material, or any change in the compaction equipment used occurs. Each Control Strip is to remain in place and become a portion of the completed embankment.

To determine the Control Density, a minimum of six moisture and density tests shall be taken at random locations by

the Engineer or representative, using a nuclear moisture density gauge. Test results shall be averaged to determine the in-place maximum dry density.

The maximum compacted thickness of each layer shall not exceed 200 mm except when it can be demonstrated, in construction of the Control Strip, that adequate compaction of thicker lifts is possible. The Control Density of lifts greater than 200 mm shall be equal to or greater than the Control Density of 200 mm layers. No additional lifts shall be placed until the control density is determined and required compaction is attained.

The Control Strip moisture content shall be adjusted to produce necessary compaction as directed by the Engineer. If the Control Strip compaction is being adversely affected by the moisture content of the soil, being either excessive or deficient, the Control Strip construction shall not continue until the moisture content is reduced or increased, to produce necessary compaction.

The type and mass of the compaction equipment used shall be such that uniform density is obtained throughout the depth of the layer being compacted. Minimum compaction equipment shall be vibratory steel rollers weighing not less than 6 t each and having a vibratory capacity of at least 1500 VPM with a minimum dynamic or centrifugal force of 8000 kg, operated in the vibratory mode, and at a speed not exceeding 8 km/h.

5.2.1 Control Density Determination. A lift of material shall be spread over the entire Control Strip section. Once the Control Strip lift has been completely spread, the measurements for the Control Density shall commence and continue during repeated passes of the compaction equipment until a maximum dry density is achieved.

A "Pass" is defined as one complete coverage of the Control Strip layer with the compaction equipment. Testing of the Control Strip shall be discontinued when the average dry density between each series of passes:

- increases by less than 10 kg/m^3
- continually decreases, or
- remains constant.

This maximum dry density shall be the Control Density used to determine the percent compaction in other areas of the project of the same lift and thickness and of the same material as that used in the Control Section.

6.0 QUALITY CONTROL / QUALITY ASSURANCE

7.0 METHOD OF MEASUREMENT

The quantity of compaction shall be the number of cubic metres of compacted material placed and accepted in embankments computed using the average end area method of computation. The Contractor shall be required to place and compact material to within 0.5 m of the theoretical embankment lines. If the Contractor places and compacts material beyond the theoretical embankment lines no additional payment will be made for this material. If the Contractor places and compacts material beyond the 0.5 m tolerance they may be required to remove this material at their own cost. The quantity of compaction in areas of excavation, where compaction of the top of the subgrade material is undertaken, shall be calculated based on the width multiplied by 300 mm depth below the top of the subgrade.

8.0 BASIS OF PAYMENT

The quantity of compaction as specified above, will be paid for at the contract unit price bid for compaction which price shall be full compensation for the work described in this section including the furnishing of all equipment, labour, materials and incidentals necessary to complete the work. If the Contractor places and compacts material to within ± 0.5 m (measured horizontally) of the theoretical line they will be paid to the theoretical embankment lines. No payment will be made for material placed and compacted beyond the theoretical slopes.

When Common or Borrow material is placed in and across a body of water for the purpose of subgrade construction, no payment will be made for compaction of any materials lying below the surface of the water at the time the embankment is constructed.

9.0 WARRANTY

SECTION 9 - WATER FOR COMPACTION & DUST CONTROL

1.0 DESCRIPTION

Water for Compaction is water applied to gravels and material placed in embankments to facilitate consolidation to the specified density.

Water for Dust Control is water applied to the surface of the work to suppress dust.

2.0 REFERENCES

All reference standards shall be current issue or latest revision at the first date of tender advertisement. This specification refers to the following standards, specifications or publications:

- Division 2 Section 8, Compaction
- Division 3 Section 5, Compaction of Gravels

3.0 SUBMISSIONS AND DESIGN REQUIREMENTS

4.0 MATERIALS

5.0 CONSTRUCTION METHODS

The quantity of water used for compaction shall not exceed that required to increase the moisture content of the material to optimum moisture condition.

Water for dust control shall be applied as directed by the Engineer.

All equipment used for the application of water shall be equipped with pressure type distributors capable of uniform distribution of water and a positive means of shut-off. At least one mobile unit of not less than 4,500 l capacity for applying water shall be available for use on the project at all times and shall be retained on the project when requested by the Engineer.

6.0 QUALITY CONTROL / QUALITY ASSURANCE

7.0 METHOD OF MEASUREMENT

The quantity of Water for Compaction and Dust Control to be paid for under this section shall be the number of kilolitres utilized in the work.

8.0 BASIS OF PAYMENT

Water for Compaction and Dust Control will be paid for at the contract unit price per kilolitre. The price shall be full compensation for furnishing, handling, transporting and applying water, and for the supplying of all equipment, labour and incidentals necessary to complete the work herein specified.

9.0 WARRANTY

SECTION 10 - ROUGH GRADING

1.0 DESCRIPTION

Rough Grading shall consist of reshaping the existing roadway to a maximum depth of approximately 300 mm. This shall occur on sections of roadway where it is not practical to measure quantities of excavation by cross-sectioning.

2.0 REFERENCES

3.0 SUBMISSIONS AND DESIGN REQUIREMENTS

4.0 MATERIALS

5.0 CONSTRUCTION METHODS

Rough Grading the existing roadway may include scarifying, shaping, trimming, compaction and disposal of surplus material.

Examples of Rough Grading are:

- the removal of material from the inside of curves on paving contracts to correct the superelevation or;
- the removal of material to lower the grade on short sections where there is a bump in the profile.

6.0 QUALITY CONTROL / QUALITY ASSURANCE

7.0 METHOD OF MEASUREMENT

The quantity of Rough Grading to be paid for under this section shall be the number of square metres of Rough Grading, based on horizontal measurements, prepared in accordance with the plans or as directed by the Engineer.

8.0 BASIS OF PAYMENT

Rough Grading will be paid for at the contract unit price per square metre for Rough Grading which price shall be full compensation for all scarifying, shaping, trimming, compaction and disposal of all surplus material and for the furnishing of all equipment, plant, labour and incidentals necessary to complete the work.

9.0 WARRANTY

SECTION 11 - FINE GRADING

1.0 DESCRIPTION

Fine Grading shall consist of preparing previously graded subgrade or subbase for immediate placement of granular materials or pavements. The Contractor shall do all the grading to conform with the lines and grades as shown on the plans or as directed by the Engineer.

2.0 REFERENCES

All reference standards shall be current issue or latest revision at the first date of tender advertisement. This specification refers to the following standards, specifications or publications:

- Division 2 Section 8, Compaction
- Division 3 Section 2, Gravel Type 1, 1S & 2
- Division 3 Section 5, Compaction of Gravels

3.0 SUBMISSIONS AND DESIGN REQUIREMENTS

4.0 MATERIALS

5.0 CONSTRUCTION METHODS

Before any granular or paving materials are applied the subgrade or subbase shall be scarified, if necessary, shaped, trimmed and compacted to the lines and grades as directed by the Engineer. Compaction of the subgrade or subbase shall be accomplished with an approved roller as detailed in Division 2 Section 8 or Division 3 Section 5. All hollows and depressions shall be filled with acceptable material and compacted. Shaping, trimming, filling, and compacting shall continue until no depressions develop and the finished surface is smooth and uniform.

The final cross-section of the subgrade shall conform to the established grades within a tolerance:

- For Common or Borrow ± 25 mm
- For Rock Fill ± 40 mm
- For subbase refer to the corresponding gravel classification as detailed in Division 3 Section 2.

Prior to the placement of granular materials or paving materials the subgrade or subbase shall be prepared at least 1 km in advance or as directed by the Engineer. The subgrade or subbase shall be kept continually and satisfactorily fine graded. Any surplus material resulting from the fine grading operations shall be used in building shoulders or if unsuitable for such purpose, shall be disposed of as directed.

6.0 QUALITY CONTROL / QUALITY ASSURANCE

7.0 METHOD OF MEASUREMENT

The quantity of Fine Grading to be paid shall be the number of square metres, based on horizontal measurements, or as directed by the Engineer.

8.0 BASIS OF PAYMENT

Fine Grading will be paid at the contract unit price per square metre. The price shall be the full compensation for all scarifying, shaping, trimming, filling and rolling, handling, and disposal of all surplus material and for the furnishing of all equipment, labour and incidentals necessary to complete the work. Fine Grading shall not be paid more than once for any area. Fine Grading shall normally be paid for the full width of the roadway as prepared in cases 8.1., 8.2. and 8.3.

Fine Grading shall be paid only once on any one contract as per the following:

8.1 Grading Contract. For preparing the subgrade prior to the application of the initial gravel course.

8.2 Combined Grading and Stabilization and/or Paving Contract. For preparing the subgrade prior to the application of the initial gravel course.

8.3 Stabilization and/or Paving Contract. For the preparing the previously constructed gravel subbase prior to the application of any additional gravel courses.

8.4 Final Paving and Paving of Shoulders. For preparing the previously constructed gravel shoulders prior to the application of any additional gravels or paving courses.

9.0 WARRANTY

SECTION 12 - FOUNDATION EXCAVATION

1.0 DESCRIPTION

Foundation Excavation shall consist of the removal of material for the construction of culverts, farm crossings and the laying of pipe, catch basins and retaining walls.

2.0 REFERENCES

All reference standards shall be current issue or latest revision at the first date of tender advertisement. This specification refers to the following standards, specifications or publications:

- Division 2 Section 4, Disposal of Surplus Material
- Division 5, Section 12 Underground Drainage Structures
- Drawing S-2009-142
- Drawing S-2009-144

3.0 SUBMISSIONS AND DESIGN REQUIREMENTS

4.0 MATERIALS

5.0 CONSTRUCTION METHODS

Foundation Excavation shall conform to the lines and grades shown on the plans or as directed by the Engineer.

Boulders measuring 0.25 m^3 or greater, all rock insitu and masonry of old structures shall be classed as Foundation Excavation Solid Rock. All other excavated materials shall be classed as Foundation Excavation Common. The materials, including culvert materials such as metal, plastics, concrete, native timber, treated timber and creosote timber so removed, shall be satisfactorily utilized or disposed of as directed by the Engineer.

After the excavation has been completed the Contractor shall notify the Engineer and no bedding material, masonry, pipe or other material shall be placed in the excavated area until the Engineer has approved the lines and grades of the excavation and character of the foundation material.

Where any structure including farm crossings, driveway culverts and roadway culverts etc., are to be installed and when sufficient excavation has been carried out during grading operations, Foundation Excavation will not be allowed but the excavation will be classified as Roadway and Drainage Excavation. If additional excavation is required for installing any structure including farm crossings, driveway culverts and roadway culverts, etc., this additional excavation shall be classified as Foundation Excavation.

6.0 QUALITY CONTROL / QUALITY ASSURANCE

7.0 METHOD OF MEASUREMENT

All excavated material shall be measured in cubic metres in its original position provided such material has been satisfactorily utilized or disposed of as directed. The maximum limits for foundation excavation shall be as detailed in drawings S-2009-142 and S-2009-144 or as directed by the Engineer.

Measurement shall be based on the actual excavation carried out within the specified limits.

8.0 BASIS OF PAYMENT

The volume of Foundation Excavation measured as provided above will be paid for at the contract unit price bid per cubic metre for Foundation Excavation Common or Foundation Excavation Solid Rock, as the case may be. The volume of subsurface boulders paid as Foundation Excavation Solid Rock shall be deducted from the volume paid as Foundation Excavation Common. Payment shall be full compensation for the work described in this section, including transportation and disposal of unsalvageable materials, tipping fees, and all plant, equipment, materials, labour, and incidentals necessary to complete the work.

9.0 WARRANTY

SECTION 13 - FOUNDATION EXCAVATION FOR BRIDGES

1.0 DESCRIPTION

Foundation Excavation for Bridges shall consist of the excavation for foundations of structures to the lines and grades as shown on the drawings or as directed by the Engineer. Where required, removal of existing bridge abutments and piers shall be considered as Foundation Excavation for Bridges.

2.0 REFERENCES

All reference standards shall be current issue or latest revision at the first date of tender advertisement. This specification refers to the following standards, specifications or publications:

- Division 7 Section 9, Water Control for Bridge Foundations.

3.0 SUBMISSIONS AND DESIGN REQUIREMENTS

4.0 MATERIALS

5.0 CONSTRUCTION METHODS

Foundation Excavation shall be carried out in accordance with the drawings or as directed by the Engineer. The use of explosives or other means, which in the opinion of the Engineer might disturb existing structures, etc., shall not be permitted.

Boulders measuring 0.25 m^3 or greater, all rock insitu and masonry of old structures shall be classed as Foundation Excavation for Bridges Solid Rock. All other excavated materials shall be classed as Foundation Excavation for Bridges Common. The materials, so removed, shall be satisfactorily utilized or disposed of as directed by the Engineer.

If a cofferdam is required or deemed necessary by the Contractor, the Contractor shall submit a design for the cofferdam to the Engineer for review and approval. The design shall include the type of piling as well as the method proposed for dewatering and filling with concrete. Approval of the design shall be obtained before any construction is undertaken.

Should springs or flowing water occur in any part of the foundation area, a free and open channel shall be provided to allow the flow of water to discharge outside the limits of foundation to the satisfaction of the Engineer.

The disposition of excavated materials, usable or otherwise, together with the provision of backfill, shall be carried out as approved by the Engineer. In the case of rock excavation, all loose and disturbed portions of the rock shall be removed and the exposed surface levelled, stepped or otherwise treated as directed by the Engineer.

After each excavation is completed, the Contractor shall provide notification to the Engineer so that an inspection of the work may be carried out. No concrete or permanent timber shall be placed until the depth of the excavation and the character of the foundation material have been approved. Elevations of bottoms of footings as shown on the plans are approximate only and the final elevations are to be approved by the Engineer. After removal of the forms, the excavations around structures shall be backfilled up to the level shown on the drawings or as otherwise directed. If approved, materials obtained from the foundation excavation may be used for backfilling, however, no fill shall be placed against any part of any structure until approved by the Engineer.

6.0 QUALITY CONTROL / QUALITY ASSURANCE

7.0 METHOD OF MEASUREMENT

All excavated material shall be measured in cubic metres in its original position, provided such material has been satisfactorily utilized or disposed of as directed. The maximum limits for Foundation Excavation for Bridges shall be 1 m beyond the footing, measured horizontally at the bottom of the excavation, and extending at a 1 to 1 slope to the prefoundation excavation surface. No measurement for payment shall be made for excavated material moved more than once or required due to slides, cave-ins, silting, or filling due to the action of the elements or other causes. Measurement shall be based on the actual excavation carried out within the theoretical limits.

8.0 BASIS OF PAYMENT

Foundation Excavation for Bridges measured as provided above, for work completed and accepted, will be paid for at the contract unit price for Foundation Excavation Bridges, Common; and Foundation Excavation Bridges, Solid Rock, as the case may be, which prices shall be full compensation for all the work prescribed under this section including all equipment, materials, labour, and incidentals necessary to complete the work, with the exception of cofferdams and pumping which will be paid for as detailed in Division 7 Section 9.

9.0 WARRANTY

SECTION 1 - GRAVEL BORROW

1.0 DESCRIPTION

When gravel or rock is specified for use in subbase, shoulders or for any other purpose for which the ordinary borrow is not permitted, such gravel or rock shall be classified as Gravel Borrow provided it is obtained outside of the slopes of the roadway. Gravel Borrow shall not be obtained from within the right-of-way without the approval of the Engineer.

2.0 REFERENCES

All reference standards shall be current issue or latest revision at the first date of tender advertisement. This specification refers to the following standards, specifications or publications:

- ASTM C 117, Test Method for Material Finer Than 75 μm Sieve in Mineral Aggregate by Washing
- ASTM C 127, Test Method for Specific Gravity and Absorption of Coarse Aggregate
- ASTM C 136, Test Method for Sieve Analysis of Fine and Coarse Aggregate
- ASTM D 4318, Test Method for Liquid Limit, Plastic Limit and Plasticity Index of Soils
- DOT&PW TM-1, Test Method for the Resistance of Coarse Aggregate to Degradation in the Micro-Deval Apparatus
- Division 1 Section 4, General Provisions
- Division 3 Section 5, Compaction of Gravels

3.0 SUBMISSIONS AND DESIGN REQUIREMENTS

4.0 MATERIALS

Gravel Borrow shall be composed of approved hard, durable stones and sand, particles in conformance with this specification.

4.1 Gradation Requirements. Gravel Borrow, when tested by ASTM C 117 and C 136, shall conform to the requirements as detailed in Table 3.1.1.

4.2 Physical Properties. Gravel Borrow shall conform to the physical properties listed in Table 3.1.2

Table 3.1.1 – Gradation

Sieve Size μm	Percent Passing
U.S. Standard	Gravel Borrow
125 000	100
16 000	16-67
75	3-10

Table 3.1.2 - Physical Properties

Property	Test Method	Gravel Borrow
Absorption, % maximum	ASTM C 127	1.75
Plasticity Index	ASTM D 4318	0
Micro-Deval, % maximum	DOT&PW TM-1	35

5.0 CONSTRUCTION METHODS

Gravel Borrow shall be placed in layers not to exceed 300 mm in thickness and shall be compacted to 98% of the Control Density using the Control Strip Method outlined in Division 3 Section 5.

6.0 QUALITY CONTROL / QUALITY ASSURANCE

7.0 METHOD OF MEASUREMENT

The Contractor shall, at their own expense, provide, install and maintain such approved scales and all suitable facilities as detailed in Division 1 Section 4 Subsection 7.

8.0 BASIS OF PAYMENT

Gravel Borrow will be paid for at the contract unit price per tonne for Gravel Borrow. The price shall be full compensation for furnishing all materials, equipment, and labour required to carry out the excavating, handling, hauling, placing and compacting of the Gravel Borrow.

9.0 WARRANTY

SECTION 2 - GRAVEL TYPE 1, 1S, 2 & M

1.0 DESCRIPTION

Gravel Type 1, Type 1S, Type 2 and Type M shall be composed of crushed and screened rock or gravel. The material shall be transported and placed upon the subgrade, subbase or shoulder and compacted as directed and in accordance with these specifications.

2.0 REFERENCES

All reference standards shall be current issue or latest revision at the first date of tender advertisement. This specification refers to the following standards, specifications or publications:

- ASTM C 117, Test Method for Material Finer Than 75 µm Sieve in Mineral Aggregate by Washing
- ASTM C 127, Test Method for Specific Gravity and Absorption of Coarse Aggregate
- ASTM C 131, Resistance to Degradation of Small - Size Coarse Aggregate by Abrasion and Impact in the Lost Angeles Machine
- ASTM C 136, Test Method for Sieve Analysis of Fine and Coarse Aggregate
- ASTM D 4791, Flat or Elongated Particles in Coarse Aggregate
- ASTM D 4318, Test Method for Liquid Limit, Plastic Limit and Plasticity Index of Soils
- TPW TM-1, Test Method for the Resistance of Coarse Aggregate to Degradation in the Micro-Deval Apparatus
- TPW TM-3, Test Method for the Determination of Percent Fractured Particles in Processed Coarse Aggregate
- Division 1 Section 4, General Provisions
- Division 2 Section 7, Shoulders
- Division 3 Section 5, Compaction of Gravels

3.0 SUBMISSIONS AND DESIGN REQUIREMENTS

4.0 MATERIALS

Gravel shall be composed of approved hard, durable stones and sand particles in conformance with this specification.

4.1 Gradation Requirements. The gravels shall be free from flat, elongated or other objectionable pieces and shall be approved by the Engineer prior to utilization. The gravels shall be tested in accordance with ASTM C 117 and C 136 and shall fulfil the gradation requirements detailed in Table 3.2.1.

Table 3.2.1 - Gradation

Sieve Size, µm	Percent Passing			
	Type 1	Type 1S	Type 2	Type M
75 000			100	
63 000				
50 000			65 - 98	
37 500				
31 500				
25 000	100	100	48 - 78	100
19 000	90 - 100	98 - 100		85 - 100
16 000				
12 500	48 - 82 [3]	48 - 85	33 - 63	65 - 90
9 500				
4 750	20 - 50	30 - 55	20 - 50	30 - 60
2 360				
1 180				15 - 35
600				
300				
150	5 - 12	7 - 20[2]	3-10	5 - 12
75	3 - 8[1]	5 - 12[2]	0 - 7[1]	3 - 8

[1]For gravel sources not classified as quarries the allowable percentage passing the 75 µm sieve shall be 3 to 5%.
[2] Where percentages passing the 4 750 µm sieve are between 30 and 45%, the allowable percentage passing the 75 µm sieve shall be 3 to 12% and the allowable percentage passing the 150 µm shall be 5 to 20 %.
[3]For gravel sources classified as quarries the allowable percentage passing the 12 500 µm sieve shall be 50 - 90%.

4.2 Fractured Particles Content. The gravel shall have a fractured particle content conforming to values listed in Table 3.2.2. The fractured particle shall have at least one well defined fresh face resulting from fracture, with the face comprising no less than 20% of the particle surface area. Particles with smooth faces and rounded edges, or with only small chips removed, are not considered fractured.

Table 3.2.2 - Fractured Particles

Gravel	Fractured Particles, one face, % min.	Test Method
Type 1[1]	80	TPW
Type 1[2]	50	TPW
Type 2 and 1S	50	TPW
Type M	40	TPW

(1) For highways with truck (FHWA Class 4 or above) traffic equal to or greater than 200 per day.
(2) For highways with less than 200 trucks (FHWA Class 4 or above) per day.

4.3 Physical Properties. Gravel materials shall conform to the physical properties listed in Table 3.2.3.

Table 3.2.3 - Physical Properties

Property	Test Method	Type 1	Type 1S	Type 2	Type M
Absorption % max.	ASTM C 127	1.75	1.75	1.75	2.00
LA Abrasion % max.	ASTM C 131	40	40	40	40
Plasticity Index max.	ASTM D 4318	3	3	3	3
Micro-Deval % max.	TPW	20	35	20	30

5.0 CONSTRUCTION METHODS

Crushing, screening, stockpiling and transporting of materials shall be performed by such methods so that a uniform grade of material shall be placed on the roadbed. Screening shall be done with vibrating or rotary screens to eliminate all objectionable material such as earth, sod, foreign vegetable matter, clay or any excess of silt in the gravel. Prior to the placement of Gravel Type 2 or Type 1, the existing subgrade or subbase shall be shaped to the required cross-section to the approval of the Engineer.

Gravels Type 1, Type 1S, Type 2 and Type M (where required) shall be compacted as specified in Division 3 Section 5 and shall be shaped with a blade grader while being compacted. On secondary roads with narrow shoulders it may be not be safe or practical to utilize standard compaction equipment. At the discretion of the Engineer alternate methods of compaction and/or target densities may be approved for Gravel Type 1S in these situations. Gravel Type 1S placed by the Contractor in the vicinity of guide posts, guard rail posts and sign posts shall be hand raked to the satisfaction of the Engineer. The shaping of the material shall be continued until it is well compacted, free from ruts, waves and undulations. The final authorized cross-section shall conform to the established grades within a tolerance of ± 25 mm for Gravel Type 2 and ± 10 mm for Gravel Type 1 but not uniformly high or low.

Gravel Type M is intended for use by maintenance personnel as a surface course or general maintenance material.

Gravel shall be placed in stockpile prior to being transported to the job site. Where tender quantities permit, the Contractor shall maintain a minimum of 1000 tonnes in stockpile until the last 1000 tonnes is placed. Stockpiles shall be built in layers not to exceed 1 m in depth. Each layer shall be completed before beginning the next layer. Aggregates delivered to the stockpile in trucks shall be uniformly spot-dumped and the stockpile built as specified above. Coning of stockpiles shall not be permitted.

5.1 Inspection. The Department will have a representative at the site of gravel production. The Contractor is responsible to provide free and safe access to the site to permit the Department's representative to carried out required duties.

The Contractor shall supply an inspection facility at the gravel production site for the Department's representative and at the Contractor's expense. The location of this facility shall be close to the production site which allows a clear view of the operation and shall be in an environmentally acceptable area. At the gravel production site, a reservoir of 100 L. of water suitable for performing tests shall be supplied.

5.1.1 Inspection Quarters - Aggregate Production Facility.

- outside dimension 2 m x 2 m minimum
- one door

- one window
- one bench
- one chair
- supply of water for testing purposes
- source of heat and/or light (if required)

6.0 QUALITY CONTROL / QUALITY ASSURANCE

7.0 METHOD OF MEASUREMENT

The Contractor shall, at their own expense, provide, install and maintain such approved scales and all suitable facilities as detailed in Division 1 Section 4 Subsection 7.

The quantity of Gravels Type 1, Type 1S, Type 2 and Type M placed in stockpile as indicated above, will be estimated by the Engineer.

8.0 BASIS OF PAYMENT

Gravels Type 1, Type 1S, Type 2 and Type M will be paid for at the contract unit price per tonne for Gravels. The price shall be full compensation for furnishing all materials, equipment, and labour required to carry out the crushing, screening, handling, hauling, placing and compacting of the Gravels as well as any incidentals necessary to complete the work.

Gravels Type 1, Type 1S, Type 2 and Type M placed in stockpile as indicated above will be paid for at the current rate as indicated in Appendix C.

When such materials in stockpile have been placed on the highway the Contractor shall be paid at the unit price bid for such materials and the payments for such materials in stockpile shall be deducted and shown as a minus quantity on the estimate sheet. Any gravel left in stockpile and not used on the highway will not be paid for and shall remain the property of the Contractor.

The Contractor may be paid for gravels in stockpile when such materials cannot be placed on the highway within a period of two months from the date of commencement of crushing such material.

9.0 WARRANTY

SECTION 3 - AIR COOLED BLAST FURNACE SLAG

1.0 DESCRIPTION

Air Cooled Blast Furnace Slag (BFS) Type 1, Type 1S and Type 2 shall be composed of crushed and screened Air Cooled Blast Furnace Slag. The material shall be transported and placed upon the subgrade, subbase or shoulder and compacted as directed and in accordance with these specifications.

2.0 REFERENCES

All reference standards shall be current issue or latest revision at the first date of tender advertisement. This specification refers to the following standards, specifications or publications:

- ASTM C 117, Test Method for Material Finer Than 75μm Sieve in Mineral Aggregate by Washing
- ASTM C 125, Terminology Relating to Concrete and Concrete Aggregates
- ASTM C 136, Test Method for Sieve Analysis of Fine and Coarse Aggregates
- ASTM D 4318, Test Method for Liquid Limit, Plastic Limit and Plasticity Index of Soils
- DOT&PW TM-1, Test Method for the Resistance of Coarse Aggregate to Degradation in the Micro-Deval Apparatus
- Division 1 Section 4, General Provisions
- Division 3 Section 5, Compaction of Gravels

3.0 SUBMISSIONS AND DESIGN REQUIREMENTS

4.0 MATERIALS

Materials for BFS Type 1, Type 1S and Type 2 shall be the non-metallic product consisting essentially of silicates and aluminosilicates of lime and other bases which is developed in a molten condition simultaneously with iron in a blast furnace as referenced in ASTM C 125.

4.1 Gradation Requirements. The BFS shall be free from deleterious materials shall be approved by the Engineer prior to utilization. The BFS shall be tested in accordance with ASTM C 117 and C 136 and shall fulfill the gradation requirements listed in Table 3.3.1.

4.2 Physical Properties. BFS materials shall conform to the physical properties listed in Table 3.3.2.

Table 3.3.1 - Gradation

Sieve Size, μm	Percent Passing		
	Type 1	Type 1S	Type 2
80 000			100
56 000			70-100
28 000			50-80
20 000	100	100	
14 000	50-85	50-85	35-65
5 000	20-50	30-55	20-50
160	5-12	7-20	3 - 10
80	3-8	5-12	0 - 7

Table 3.3.2 - Physical Properties

Property	Test Method	Type 1	Type 1S	Type 2
Plasticity Index	ASTM D 4318	0	0	0
Micro-Deval, max. %	DOT&PW TM-1	25	35	25

5.0 CONSTRUCTION METHODS

Crushing, screening and loading of materials shall be performed by such methods that a uniform grade of material shall be placed on the roadbed. Prior to placement of BFS Type 2 or Type 1, the existing subgrade shall be shaped to the required cross-section to the approval of the Engineer.

BFS Type 1, Type 1S and Type 2 shall be compacted as detailed in Division 3 Section 5 and shall be shaped with a blade grader while being compacted. The shaping of the material shall be continued until it is well compacted, free from ruts, waves and undulations and the final authorized cross-section shall be to the established grades within a tolerance of ± 25 mm for BFS Type 2 and ± 10 mm for BFS Type 1 but not uniformly high or low.

Stockpiles shall be built in layers not to exceed 1 m in depth. Each layer shall be completed before beginning the next layer. Aggregates delivered to the stockpile in trucks shall be uniformly spot-dumped and the stockpile built as specified above. Coning of stockpiles shall not be permitted.

6.0 QUALITY CONTROL / QUALITY ASSURANCE

7.0 METHOD OF MEASUREMENT

The Contractor shall, at their own expense, provide, install and maintain such approved scales and all suitable facilities as detailed in Division 1 Section 4 Subsection 7.

The quantity of BFS Type 1, Type 1S and Type 2 placed in stockpile as indicated above, will be estimated by the Engineer.

8.0 BASIS OF PAYMENT

BFS Type 1, Type 1S and Type 2 will be paid for at the contract unit price per tonne for Gravels. The price shall be full compensation for furnishing all materials, equipment, and labour required to carry out the excavating, handling, hauling, placing and compacting of the BFS Gravel.

BFS Type 1, Type 1S and Type 2 placed in stockpile as indicated above will be paid at the current rates as indicated in Appendix C.

When such materials in stockpile have been placed on the highway the Contractor shall be paid the unit price for such materials and the payments for such materials in stockpile shall be deducted and shown as a minus quantity on the estimate sheet. Any aggregate left in stockpile and not used on the highway will not be paid for and shall remain the property of the Contractor.

The Contractor may be paid for BFS aggregate in stockpile when such materials cannot be placed on the highway within a period of two months from the date of commencement of crushing such material.

9.0 WARRANTY

SECTION 4 - CLEAR STONE

1.0 DESCRIPTION

Clear Stone C1 to C5 shall be composed of crushed or uncrushed, screened rock. Clear Stone is normally specified for use as drainage enhancement, flow checks or slope protection.

2.0 REFERENCES

All reference standards shall be current issue or latest revision at the first date of tender advertisement. This specification refers to the following standards, specifications or publications:

- ASTM C 117, Test Method for Material Finer Than 75 μm Sieve in Mineral Aggregate by Washing
- ASTM C 127, Test Method for Specific Gravity and Absorption of Coarse Aggregate
- ASTM C 136, Test Method for Sieve Analysis of Fine and Coarse Aggregates
- ASTM D 4318, Test Method for Liquid Limit, Plastic Limit and Plasticity Index of Soils
- DOT&PW TM-1, Test Method for the Resistance of Coarse Aggregate to Degradation in the Micro-Deval Apparatus
- Division 3 Section 5, Compaction of Gravels
- Division 1 Section 4, General Provisions

3.0 SUBMISSIONS AND DESIGN REQUIREMENTS

4.0 MATERIALS

Materials for Clear Stone shall consist of hard, durable stone particles, in conformance with this specification.

4.1 Gradation Requirements. The stone shall be free from flat, elongated or other objectionable pieces and shall be approved by the Engineer prior to utilization. The gravels shall be tested in accordance with ASTM C 117 and C 136 and shall fulfil the gradation requirements listed in Table 3.4.1.

4.2 Physical Properties. Clear Stone aggregates shall conform to the properties listed in Table 3.4.2.

5.0 CONSTRUCTION METHODS

Crushing, if required, screening and transporting of materials shall be performed by such methods that a uniform grade of material will be placed on the roadbed. If directed by the Engineer Clear Stone shall be compacted as detailed in Division 3 Section 5 except the Control Strip may have to be modified as directed by the Engineer.

Table 3.4.1 - Gradation

Sieve Size					
U.S. Standard	**C1**	**C2**	**C3**	**C4**	**C5**
250 000	100				
190 000		100	100		
150 000	20 - 35	90 - 100	90 - 100		
125 000		30 - 50	40 - 60		
100 000		0 - 8	12 - 30	100	
90 000					
75 000			0 - 19	85 - 100	
50 000	0 - 10				
31 500				10 - 20	
25 000				0 - 8	100
19 000			0 - 10		85 - 100
9 500					0 - 40
4 750					0 - 10

Table 3.4.2 - Physical Properties

Property	Test Method	Class C1 to C5
Absorption, % max.	ASTM C 127	1.75
Plasticity Index	ASTM D 4318	0
Micro-Deval, % max.	DOT&PW TM-1	25

Stockpiles shall be built in layers not to exceed 1 m in depth. Each layer shall be completed before beginning the next layer. Materials delivered to the stockpile in trucks shall be uniformly spot-dumped and the stockpile built as specified above. Coning of stockpiles shall not be permitted..

6.0 QUALITY CONTROL / QUALITY ASSURANCE

7.0 METHOD OF MEASUREMENT

The Contractor shall, at their own expense, provide, install and maintain such approved scales and all suitable facilities as detailed in Division 1 Section 4 Subsection 7.

The quantity of Clear Stone placed in stockpile as indicated above will be estimated by the Engineer.

8.0 BASIS OF PAYMENT

Clear Stone will be paid for at the contract unit price per tonne for Clear Stone. The price shall be full compensation for furnishing all materials, equipment and labour required to carry out the excavating, handling, hauling, placing and compacting of the Clear Stone.

When such materials have been placed on the highway the Contractor shall be paid the unit price for such materials and the payments for such materials in stockpile shall be deducted and shown as a minus quantity on the estimate sheet. Any aggregate left in the stockpile and not used on the highway will not be paid for and shall remain the property of the Contractor.

The Contractor may be paid for stone in stockpile when such materials cannot be placed on the highway within a period of two months from the date of commencement of crushing such material.

Clear Stone placed in stockpile as indicated above will be paid at the current rates as indicated in Appendix C.

9.0 WARRANTY

SECTION 5 - COMPACTION OF GRAVELS

1.0 DESCRIPTION

Gravels Type 1, Type 1S, Type 2, BFS and Clear Stone (if directed by the Engineer) shall be placed and compacted to a minimum of 100 % maximum dry density attained using the method prescribed herein as "Control Strip". The shaping of the material shall be continued until it is well compacted, free from ruts, waves and undulations.

2.0 REFERENCES

All reference standards shall be current issue or latest revision at the first date of tender advertisement. This specification refers to the following standards, specifications or publications:

- Division 2 Section 9, Water for Compaction & Dust Control
- Division 3 Section 2, Gravel Type 1, 1S & 2

3.0 SUBMISSIONS AND DESIGN REQUIREMENTS

4.0 MATERIALS

5.0 CONSTRUCTION METHODS

5.1 Control Strip Method. A Control Strip is a lift of granular base course constructed on a 200 m section, minimum 3 m wide, of prepared surface selected by the Engineer. A maximum dry density "Control Density" shall be established on the lift of granular base course using the equipment and method of compaction as prescribed herein for construction of a Control Strip.

A Control Strip shall be constructed at the beginning of work. One or more Control Strips shall be constructed whenever a change is made in the type or source of material or any change in the compaction equipment used. The thickness shall be the same as for the completed courses in the pavement section. Each Control Strip shall remain in place and become a portion of the completed base course. No additional lifts shall be placed until the control density is determined and the compacted lift is approved by the Engineer. The Control Strip moisture content shall be adjusted to produce necessary compaction as directed by the Engineer. The surface of the granular base course shall be kept moist until testing is complete.

To determine the Control Density, a minimum of six moisture and density tests shall be taken at random locations by the Engineer, using nuclear equipment. Test results shall be averaged to determine the in-place maximum dry density.

The type and mass of the compaction equipment used shall be such that uniform density is obtained throughout the depth of the layer being compacted. Minimum compaction equipment shall be a vibratory steel roller(s) weighing not less than 6 t, having a vibratory capacity of at least 1500 VPM with a minimum dynamic or centrifugal force of 8000 kg, operated in the vibratory mode, and at a speed not exceeding 8 km/h.

5.2 Control Density Determination. A lift of granular base course shall be spread over the entire Control Strip section. Once the Control Strip lift has been completely spread, the measurements for the Control Density shall commence and continue during repeated passes of the compaction equipment until a maximum dry density is achieved.

A "Pass" shall be one complete coverage of the Control Strip layer with the compaction equipment.

Testing of the Control Strip shall be discontinued when the average dry density between each series of passes:

- increases by less than 10 kg/m^3,
- continually decreases, or
- remains constant.

This maximum dry density shall be the Control Density used to determine the percent compaction in other areas of the project for the same lift and thickness and same class of gravel as that used in the Control Section.

6.0 QUALITY CONTROL / QUALITY ASSURANCE

7.0 METHOD OF MEASUREMENT

8.0 BASIS OF PAYMENT

Payment for compaction shall be considered incidental to the supply of gravels as detailed in Division 3 Section 2.

9.0 WARRANTY

SECTION 6 - LOOSE LAID RIP-RAP

1.0 DESCRIPTION

Where required, Loose Laid Rip-Rap shall be laid to the lines and thickness as called for on the Plans or as directed.

2.0 REFERENCES

3.0 SUBMISSIONS AND DESIGN REQUIREMENTS

4.0 MATERIALS

Field or quarry stone of approved quality and size shall be used.

5.0 CONSTRUCTION METHODS

As detailed in the Contract Special Provisions the stone may be dumped from vehicles and allowed to roll into place or shall be machine placed where and as directed and to the satisfaction of the Engineer.

6.0 QUALITY CONTROL / QUALITY ASSURANCE

7.0 METHOD OF MEASUREMENT

As detailed in the Contract Special Provisions the quantity to be paid for shall be the number of cubic metres or tonnes actually placed as directed and to the satisfaction of the Engineer. Cubic metre measurements shall be made in place, unless it is not practicable to so measure it, in which case it may be measured in vehicles.

8.0 BASIS OF PAYMENT

The quantities measured as herein specified shall be paid for at the unit price bid, which shall include the preparation of foundation, furnishing materials and the use of equipment, labour, tools, and other incidental expenses necessary to complete the work. Where material used for Loose Rip-Rap is produced as a result of excavation from roadway, it shall not be paid for as Loose Laid Rip-Rap. Payment will be made as Roadway and Drainage Excavation.

9.0 WARRANTY

SECTION 7 - HAND LAID RIP-RAP

1.0 DESCRIPTION

Where required, Hand Laid Rip-Rap shall be laid to the lines and thickness as called for on the plans or as directed by the Engineer. Stones shall be as large a size as procurable and consistent with dimensions of the wall. They shall be approximately rectangular with the two surfaces which will become the top and bottom of the stones when placed in the wall being approximately flat and parallel.

2.0 REFERENCES

3.0 SUBMISSIONS AND DESIGN REQUIREMENTS

4.0 MATERIALS

The Engineer reserves the right to reject stone from any source based on past performance.

5.0 CONSTRUCTION METHODS

Before laying Rip-Rap, the face of the bank must be dressed off evenly to receive the stones. The bottom course shall be firmly bedded to ensure firm foundation and shall, if the Engineer deems necessary, commence in a trench below the toe of the slope.

Where necessary, the stones shall be roughly hammer dressed and shall be laid normal to the face of the wall. Joints shall be broken and not less than 75% of the stones shall be headers going entirely through the wall. The interstices between larger stones shall be fitted with smaller stones hammered in.

The wall thickness and depth shall conform to the lines given by the Engineer. The minimum wall thickness shall be 400 mm. Stones shall be placed by skilled workmen to the entire satisfaction of the Engineer.

6.0 QUALITY CONTROL / QUALITY ASSURANCE

7.0 METHOD OF MEASUREMENT

The Rip-Rap will be measured in cubic metres in place. The volume of void created by the existence of a drainage or other structure shall not be included in the volume of Rip-Rap for which payment will be made.

8.0 BASIS OF PAYMENT

The quantities measured as herein specified will be paid for at the unit price bid per cubic metre for Hand Laid Rip-Rap, which price shall include the preparation of foundation, furnishing materials and the use of equipment, labour, tools, and other incidental expenses necessary to complete the work.

9.0 WARRANTY

SECTION 8 - ARMOUR ROCK

1.0 DESCRIPTION

Armour Rock shall be used as a protective barrier from erosion for slopes in an aquatic environment.

The thickness of the Armour Rock layer shall normally vary from 1.0 to 1.5 times the maximum rock size in the gradation and shall be specified on the plans and/or Special Provisions.

2.0 REFERENCES

All reference standards shall be current issue or latest revision at the first date of tender advertisement. This specification refers to the following standards, specifications or publications:

- ASTM C 127, Test Method for Material Finer Than 75 μm Sieve in Mineral Aggregate by Washing
- ASTM C 131, Test Method for Resistance to Degradation of Small-Size Coarse Aggregate by Abrasion and Impact in the Los Angeles Machine

3.0 SUBMISSIONS AND DESIGN REQUIREMENTS

4.0 MATERIALS

Armour Rock shall be hard, durable, field or quarry stone, free from splits, seams or defects likely to impair its soundness during handling or by the actions of water and ice. Shale, slate or rocks with thin foliations shall not be acceptable. The greatest dimension of each rock shall not exceed two times the least dimension. The minimum density of the rock shall be 2 650 kg/m^3. Physical properties shall be as defined in Table 3.8.1. Sizes of Armour rock shall be as defined in Table 3.8.2.

Table 3.8.1 - Physical Properties

Property	Test Method	Armour Rock
Absorption, % maximum	ASTM C 127	1.5
Los Angeles Abrasion, % maximum	ASTM C 131	35

Table 3.8.2 - Armour Rock Sizes

Sieve Size	Percent Passing	
U.S. Standard	R1	R2
1050 mm	100	
850 mm		100
650 mm	0 - 50	
550 mm		0 - 50
300 mm	0 - 15	
230 mm		0 - 15

5.0 CONSTRUCTION METHODS

The Armour Rock shall be placed to the lines and grades shown on the drawings or as directed by the Engineer. Placement shall be by machine in order to avoid waste and to ensure that the stone is in a stable position.

6.0 QUALITY CONTROL / QUALITY ASSURANCE

7.0 METHOD OF MEASUREMENT

As detailed in the Contract Special Provisions the quantity to be paid for shall be the number of cubic metres or tonnes actually placed as directed and to the satisfaction of the Engineer. Cubic metre measurements shall be made in place, unless it is not practicable to so measure it, in which case it may be measured in vehicles.

8.0 BASIS OF PAYMENT

Armour Rock will be paid at the contract unit price bid per cubic metre or per tonne of Armour Rock. The price shall be full compensation for furnishing all materials, equipment, and labour required to carry out the excavating, handling, hauling, placing and compacting of the Armour Rock.

9.0 WARRANTY

SECTION 9 - ROCK FILL

1.0 DESCRIPTION

The Contractor shall furnish Rock Fill in cribs or for structural fill where required, as directed by the Engineer.

2.0 REFERENCES

All reference standards shall be current issue or latest revision at the first date of tender advertisement. This specification refers to the following standards, specifications or publications:

- ASTM C 127, Test Method for Specific Gravity and Absorption of Coarse Aggregate
- ASTM C 131, Resistance to Degradation of Small - Size Coarse Aggregate by Abrasion and Impact in the Lost Angeles Machine
- Division 1 Section 4, General Provisions

3.0 SUBMISSIONS AND DESIGN REQUIREMENTS

4.0 MATERIALS

The stone may be field or quarry stone and of such sizes as may be approved or specified. All pieces of stone shall be sound and subject to approval.

4.1 Gradation Requirements. The rock fill shall be free from flat, elongated or other objectionable pieces and shall be approved by the Engineer prior to utilization. The rock fill shall be a graded material in accordance with the minimum and maximum sizes as stated in the Contract Special Provisions.

4.2 Physical Properties. Rock fill shall conform to the physical properties listed in Table 3.9.1.

Table 3.9.1 - Physical Properties

Property	Test Method	Rock Fill
Absorption % max.	ASTM C 127	2.00
LA Abrasion % max.	ASTM C 131	40

5.0 CONSTRUCTION METHODS

Rock Fill shall be placed and compacted as directed by the Engineer.

6.0 QUALITY CONTROL / QUALITY ASSURANCE

7.0 METHODS OF MEASUREMENT

As detailed in the Contract Special Provisions the quantity to be paid for shall be the number of cubic metres or tonnes actually placed as directed and to the satisfaction of the Engineer. Cubic metre measurements shall be made in vehicles before being placed. The Contractor shall if required, at their own expense, provide, install and maintain such approved scales and all as detailed in Division 1 Section 4 Subsection 7.

8.0 BASIS OF PAYMENT

The volume measured as provided above, of work completed and accepted, will be paid for at the contract unit price bid per cubic metre for Rock Fill. Alternately, Rock Fill will be paid at the unit bid price per tonne. The price shall be full compensation for all work prescribed under this section, including all materials, equipment, labour and incidentals necessary to complete the work in a satisfactory manner.

9.0 WARRANTY

SECTION 10 - FILL AGAINST STRUCTURE

1.0 DESCRIPTION

Fill Against Structure (FAS) shall consist of the supply, placing and compaction of material, as hereinafter specified, adjacent to structures.

2.0 REFERENCES

All reference standards shall be current issue or latest revision at the first date of tender advertisement. This specification refers to the following standards, specifications or publications:

- ASTM C 117, Test Method for Material Finer Than 75 μm Sieve in Mineral Aggregate by Washing
- ASTM C 131, Test Method for Resistance to Degradation of Small-Size Coarse Aggregate by Abrasion and Impact in the Los Angeles Machine
- ASTM C 136, Test Method for Sieve Analysis of Fine and Coarse Aggregates
- ASTM D 4318, Test Method for Liquid Limit, Plastic Limit, and Plasticity Index of Soils
- Division 1 Section 4, General Provisions
- Division 2 Section 8, Compaction
- Division 3 Section 5, Compaction of Gravels

3.0 SUBMISSIONS AND DESIGN REQUIREMENTS

4.0 MATERIALS

4.1 Fill Against Concrete Structures. The material for Fill Against Concrete Structures shall be crushed and screened gravel or rock. It shall be approved by the Engineer prior to utilization.

4.2 Gradation Requirements. Fill Against Concrete Structures shall be tested in accordance with ASTM C 117 and C 136 and shall conform to the requirements as detailed in Table 3.10.1 or Table 3.10.2.

Table 3.10.1 and 2 - Gradation

Sieve Size	Percent Passing	
U.S. Standard	Table 3.10.1 Concrete Structures	Table 3.10.2 Metal Structures
100 000	100	
75 000		100
50 000		65 - 98
37 500	58 - 84	
25 000		47 - 78
12 500		33 - 63
4 750	25 - 50	20 - 50
300	5 - 15	
150		5 - 12
75	2 - 7	3 - 5(1)

(1) Where percentages passing the 4750 μm sieve are between 20 and 35%, the allowable percentage passing the 75 μm sieve shall be 3 to 8%.

4.3 Fill Against Metal Structures. The material for Fill Against Metal Structures shall be crushed and screened gravel or rock. It shall be approved by the Engineer prior to utilization.

4.4 Gradation Requirements. Fill Against Metal Structures shall be tested in accordance with ASTM C 117 and C 136 and shall conform to Gravel Type 2 requirements as detailed in Table 3.10.2.

4.5 Physical Properties. Fill Against Structure shall conform to the requirements as listed in Table 3.10.3.

Table 3.10.3 - Physical Properties

Property	Test Method	FAS
LA Abrasion (Grading A)	ASTM C 131	45
Plasticity Index[(1)]	ASTM D 4318	**≤ 6**

[(1)] Sand portion

5.0 CONSTRUCTION METHODS

The material shall be placed in layers not exceeding 300 mm in thickness and each layer shall be compacted by means of a vibratory compactor.

The embankment underlying the Fill Against Structure shall be compacted as detailed in Division 2 Section 8 except the control strip shall be considered as the areas under the Fill Against Structure. The FAS shall be compacted as detailed in Division 3 Section 5 except the control strip shall be considered as each lift of Fill Against Structure. Special equipment, suitable for compaction in confined spaces, shall be employed on material adjacent to the structure.

The extent of Fill Against Structure on any approach shall be as indicated on the plans or as determined by the Engineer.

6.0 QUALITY CONTROL / QUALITY ASSURANCE

7.0 METHOD OF MEASUREMENT

The Contractor shall, at their own expense, provide, install and maintain such approved scales and all suitable facilities as detailed in Division 1 Section 4 Subsection 7.

8.0 BASIS OF PAYMENT

Fill Against Structure will be paid for at the contract unit price per tonne for Fill Against Concrete Structures, regardless of which Table is utilized, or Fill Against Metal Structures, complete in place, which price shall be full compensation for furnishing all materials, including water if and when required for compaction and shall cover the supplying of all equipment, plant, labour, and incidentals necessary to complete the work.

9.0 WARRANTY

SECTION 11 - UNSHRINKABLE BACKFILL

1.0 DESCRIPTION

Unshrinkable backfill, also known as controlled low density material, is used for backfill in underground service, utility trenches, and structures.

2.0 REFERENCES

All reference standards shall be current issue or latest revision at the first date of tender advertisement. This specification refers to the following standards, specifications or publications:

- Division 5 Section 7, Cast in Place Concrete Reference Standards
- CSA A23.1, Concrete Materials and Methods of Concrete Construction
- CSA A23.2, Methods of Test for Concrete

3.0 SUBMISSIONS AND DESIGN REQUIREMENTS

The submission and design requirements shall be in accordance with Division 5 Section 7 except as noted herein and shall include at least three sets of 28 day compressive strength results to demonstrate the strength characteristics for the materials proposed for the mixture design. Testing the coarse aggregates for contribution to alkali aggregate reactivity (AAR) is not required.

4.0 MATERIALS

The materials used to produce unshrinkable backfill, portland cement, ie. fly ash, water, aggregates and admixtures, shall meet the applicable requirements of Division 5 Section 7.

Aggregate gradations other than those specified in Division 5 Section 7 may be authorized by the Engineer, however, these gradations shall be submitted as part of a mixture design submitted as per Subsection 3.0 of this specification. The maximum percentage passing the 80 μm sieve shall not exceed 9%.

The mixture shall be proportioned to provide the following properties:

- The portland cement content shall be 25 kg/m^3.
- The slump at point of discharge shall be minimum 150 mm
- The specified compressive strength at 28 days shall be maximum 1.0 MPa
- The use of fly ash, in addition to the noted portland cement content, may be used in such proportion so as not to exceed the specified compressive strength.
- Coarse aggregates, if used in the mixture, are exempt from evaluation for contribution to alkali aggregate reactivity (AAR).

5.0 CONSTRUCTION METHODS

5.1 Material Placement Requirements. The material shall be capable of flowing into the excavation so that it fills the entire space without voids being created beneath horizontal projections or in other locations within the excavation.

When shoring, bracing or sheeting is to be removed it shall be removed prior to or during the backfilling operation.

The unshrinkable backfill shall be completely placed within 120 minutes from the time of batching.

5.2 Equipment. The unshrinkable backfill shall be produced in a ready mixed concrete plant or central batch plant meeting the requirements of Division 5 Section 7.

The unshrinkable backfill shall be transported to the site by means of ready mix trucks.

5.3 Protection. The Contractor shall provide adequate measures to protect the newly placed unshrinkable backfill from damage by vehicular or pedestrian traffic by covering with steel plates of sufficient strength to support traffic. The plates shall be placed beyond the extent of any horizontal voids beneath the existing pavement surface and remain in place.

Where vehicular traffic is not accommodated, the unshrinkable backfill shall be suitably protected with planking or barrier fences until the fill can support the mass of an adult person.

6.0 QUALITY CONTROL / QUALITY ASSURANCE

6.1 Quality Control. The Contractor shall be responsible for the mixture proportions as described above and according to Division 5 Section 7.

6.2 Quality Assurance. Compressive strength tests will be conducted by the Department or its representative in accordance with the following requirements:

- Only 150 mm diameter by 300 mm wax cardboard molds shall be used to cast the test cylinders. A disc of wax paper matching the inside diameter of the cylinder mold shall be placed at the base of the cylinder mold prior to casting. The interior of the mold shall be lightly coated with a form release agent to assist in demolding.
- The cylinders shall be demolded on the same day of testing for compressive strength. The cylinders shall be tested at 28 days.
- The load indicating device of the compression machine shall be capable of incremental load increments of 100 N (0.1kN) or less.
- The minimum test requriement shall be one set of two test cylinders per day of placement.

7.0 METHOD OF MEASUREMENT

Unshrinkable backfill shall be measured by the number of cubic metres placed and based on delivery slip quantity with adjustment for any portion wasted or not used.

8.0 METHOD OF PAYMENT

No additional payment will be made for Unshrinkable Backfill when used to complete an item of work for which payment includes the backfilling.

Where an item for Unshrinkable Backfill is included as a tender bid item, payment will be made per cubic metre at the unit price in the Contract, which price shall be full compensation for all labour, equipment and materials required to complete the work.

9.0 WARRANTY

SECTION 12 - GRAVEL TYPE 1, 1S, 2 & M - (EPS)

1.0 DESCRIPTION

Gravel Type 1, Type 1S, Type 2 and Type M shall be composed of crushed and screened rock or gravel. The material shall be transported and placed upon the subgrade, subbase or shoulder and compacted as directed and in accordance with these specifications.

The Contractor shall be responsible for Quality Control (QC) testing to ensure that all materials used meet the physical and production requirements of this specification.

The Department will conduct Quality Assurance (QA) testing for physical properties and production requirements.

2.0 REFERENCES

All reference standards shall be current issue or latest revision at the first date of tender advertisement. This specification refers to the following standards, specifications or publications:

- ASTM C 117, Test Method for Material Finer Than 75 µm Sieve in Mineral Aggregate by Washing
- ASTM C 127, Test Method for Specific Gravity and Absorption of Coarse Aggregate
- ASTM C 131, Resistance to Degradation of Small Size Coarse Aggregate by Abrasion and Impact in the Los Angeles Machine
- ASTM C 136, Test Method for Sieve Analysis of Fine and Coarse Aggregate
- ASTM D 4318, Test Method for Liquid Limit, Plastic Limit and Plasticity Index of Soils
- TPW TM-1, Test Method for the Resistance of Coarse Aggregate to Degradation in the Micro-Deval Apparatus
- TPW TM-3, Test Method for the Determination of Percent Fractured Particles in Processed Coarse Aggregate
- TPW TM- 6 Procedures for Gravel Sampling
- Division 1 Section 4, General Provisions
- Division 3 Section 5, Compaction of Gravels

3.0 SUBMISSIONS AND DESIGN REQUIREMENTS

4.0 MATERIALS

Gravel shall be composed of approved hard, durable stones and sand particles in conformance with this specification.

4.1 Gradation Requirements. The gravels shall be free from flat, elongated or other objectionable pieces and shall be approved by the Engineer prior to utilization. The gravels shall be tested in accordance with ASTM C 117 and C 136 and shall fulfil the gradation requirements detailed in Table 3.2.1 except as detailed in Subsection 6.5.1. Only the portion of the gravel sample passing the 5000 µm shall be washed.

Table 3.2.1 - Gradation

Sieve Size, µm	Percent Passing			
	Type 1	Type 1S	Type 2	Type M
75 000			100	
63 000				
50 000			65 - 98	
37 500				
31 500				
25 000	100	100	48 - 78	100
19 000	90 - 100	98 - 100		85 - 100
16 000				
12 500	48 - 82 (3)	48 - 85	33 - 63	65 - 90
9 500				
4 750	20 - 50	30 - 55	20 - 50	30 - 60
2 360				
1 180				15 - 35
600				
300				
150	5 - 12	7 - 20(2)	3-10	5 - 12
75	3 - 8(1)	5 - 12(2)	0 - 7(1)	3 - 8

(1)For gravel sources not classified as quarries the allowable percentage passing the 75 µm sieve shall be 3 to 5%.
(2) Where percentages passing the 4 750 µm sieve are between 30 and 45%, the allowable percentage passing the 75 µm sieve shall be 3 to 12% and the allowable percentage passing the 150 µm shall be 5 to 20 %.
(3)For gravel sources classified as quarries the allowable percentage passing the 12 500 µm sieve shall be 50 - 90%.

4.2 Fractured Particles Content. The gravel shall have a fractured particle content conforming to values listed in Table 3.2.2. The fractured particle shall have at least one well defined fresh face resulting from fracture, with the face comprising no less than 20% of the particle surface area. Particles with smooth faces and rounded edges, or with only small chips removed, are not considered fractured.

Table 3.2.2 - Fractured Particles

Gravel	Fractured Particles, one face, % min.	Test Method
Type 1(1)	80	TPW
Type 1(2)	50	TPW
Type 2 and 1S	50	TPW
Type M	40	TPW

(1) For highways with truck (FHWA Class 4 or above) traffic equal to or greater than 200 per day.
(2) For highways with less than 200 trucks (FHWA Class 4 or above) per day.

4.3 Physical Properties. Gravel materials shall conform to the physical properties listed in Table 3.2.3.

Table 3.2.3 - Physical Properties

Property	Test Method	Type 1	Type 1S	Type 2	Type M
Absorption % max.	ASTM C 127	1.75	1.75	1.75	2.00
LA Abrasion % max.	ASTM C 131	40	40	40	40
Plasticity Index max.	ASTM D 4318	3	3	3	3
Micro-Deval % max.	TPW	20	35	20	30

The Contractor is responsible for all physical property testing.

5.0 CONSTRUCTION METHODS

Crushing, screening, stockpiling and transporting of materials shall be performed by such methods so that a uniform grade of material shall be placed on the roadbed. Screening shall be done with vibrating or rotary screens to eliminate all objectionable material such as earth, sod, foreign vegetable matter, clay or any excess of silt in the gravel. Prior to the placement of Gravel Type 2 or Type 1, the existing subgrade or subbase shall be shaped to the required cross-section to the approval of the Engineer.

Gravels Type 1, Type 1S, Type 2 and Type M (where required) shall be compacted as specified in Division 3 Section 5 and shall be shaped with a blade grader while being compacted. On secondary roads with narrow shoulders it may be not be safe or practical to utilize standard compaction equipment. At the discretion of the Engineer alternate methods of compaction and/or target densities may be approved for Gravel Type 1S in these situations. Gravel Type 1S placed by the Contractor in the vicinity of guide posts, guard rail posts and sign posts shall be hand raked to the satisfaction of the Engineer. The shaping of the material shall be continued until it is well compacted, free from ruts, waves and undulations. The final authorized cross-section shall conform to the established grades within a tolerance of ± 25 mm for Gravel Type 2 and ± 10 mm for Gravel Type 1 but not uniformly high or low.

Gravel Type M is intended for use by maintenance personnel as a surface course or general maintenance material.

Gravel shall be placed in stockpile prior to being transported to the job site. Where tender quantities permit, the Contractor shall maintain a minimum of 1000 tonnes in stockpile until the last 1000 tonnes is placed. Stockpiles shall be built in layers not to exceed 1 m in depth. Each layer shall be completed before beginning the next layer. Aggregates delivered to the stockpile in trucks shall be uniformly spot-dumped and the stockpile built as specified above. Coning of stockpiles shall not be permitted.

5.1 Inspection. The Department may have a QA representative periodically at the site of gravel production. The Contractor is responsible to provide free and safe access to the site to permit the Department's representative to carry out required duties.

6.0 QUALITY CONTROL / QUALITY ASSURANCE

6.1 Definitions.

- **Duplicate Samples:** Two samples taken at the same time and location.
- **Gradation Test:** A test used to determine the particle size distribution of an aggregate or soil material.
- **Lot:** A specific quantity of material from a single source, assumed to have been produced by the same process.
- **Mean:** The arithmetic average of a set of data**.**
- **Production Characteristic:** An attribute of an aggregate or soil material, including gradation, which is introduced into the material through the manufacturing process; i.e., crushing, screening, blending etc. Tests are carried out to measure the affects of the process.
- **Quality Assurance (QA):** A system or series of activities carried out by the Department to provide a measure

of confidence that materials received from the Contractor meet the specified requirements.

- **Quality Control (QC):** A system or series of activities performed by the Contractor to provide a measure of confidence that materials supplied to the Department meet the specified requirements.

6.2 Testing. The Contractor shall designate the Quality Control (QC) laboratories and be responsible for all costs associated with testing for QC requirements. The Department shall designate all Quality Assurance (QA) laboratories and be responsible for all costs associated with QA testing unless otherwise indicated. Referee/Appeal laboratories shall be selected by the Department and be acceptable to the Contractor. Testing shall be conducted in accordance with the referenced standards.

6.3 Quality Control (QC). The Contractor shall be responsible for all QC sampling and testing required to ensure complete conformance of each aggregate with this specification prior to use of any materials in the work. The Contractor shall be responsible for selecting the location and means of sampling. QC samples shall be split with one half of the sample bagged and retained by the Contractor. The two samples which result from the split shall meet the minimum mass requirements as outlined in table 3.2.4. The samples shall be tagged and identified as to the type of material, Lot number, date and time that the sample was retrieved.

The duplicate QC sample shall be retained by the Contractor until the completion of the contract unless otherwise directed by the Engineer. The duplicate QC sample shall be available to the Engineer for possible QA testing.

The Department shall have access to all sampling locations at any time without notice for the purposes of sampling materials for QA testing. Whenever granular aggregates are produced by crushing or screening an initial stockpile with a minimum of 1 000 tonnes of material shall be established.

6.3.1 Submission of Test Data. All individual test results for each Lot shall be submitted daily to the Department's representative in written form by whatever means necessary. All test data forms must be legible. Any failure to meet specified parameters shall be clearly noted on the form with an "**F**" beside the value(s). Faxed copies are acceptable provided that the original form is submitted within 7 days following receipt of the fax.

6.3.2 QC of Physical Properties. For each source of material the Contractor shall submit to the Department one set of test results for each 50 000 t used in the work demonstrating conformance with Table 3.2.3. If less than 50 000 t are used in the work one set of test results from each source is required. The Engineer may, if deemed appropriate to the circumstances, accept test results obtained within the past 12 months from the source to be used in the work in lieu of test data from recent sampling.

6.3.3 QC for Production. All test results for each requirement of Table 3.2.1, as applicable, shall be submitted for each Lot of each material type produced. At least three tests shall be performed on each Lot. A Lot shall be 2 500 tonnes of material.

A single set of test results for the requirements outlined in Table 3.2.2, as applicable, shall be submitted for each Lot of each type of material produced. For quarries only the first lot shall be tested.

6.3.3.1 Gravel in Stockpile. The Contractor may opt to utilize gravel produced prior to award of contract. The Contractor shall make available to the Engineer copies of all QC testing performed during production of the gravel in stockpile for each requirement of Table 3.2.1 and 3.2.2. For instances where no QC test data is available the Contractor shall obtain and test representative samples from the stockpile. A minimum of one sample for each 2500 tonnes of material in the stockpile shall be tested.

6.4 Quality Assurance (QA). QA testing will be carried out by the Department for purposes of providing a measure of confidence that materials used in the work conform to the physical and production requirements of this specification. Each type of gravel will be evaluated independently. Where more than one source is used for supply materials, each source and type of gravel will be evaluated independently. The Department reserves the right to obtain a sample at any time without notice for any purpose. In addition, materials may be rejected based on the visual identification of unacceptable materials as described in Section 5. The Project Engineer will provide copies of QA test results to the Contractor upon request.

6.4.1 Sampling. A QA test result will consist of a minimum of three individual samples from a Lot which will be retrieved and tested. The mean of the results from these three samples will be the QA test result.

For material in stockpile the Engineer will review all QC data presented. The Engineer may choose to sample and test material in stockpile to verify QC data.

A QA sample may be derived from the split QC samples retrieved by the Contractor. Alternatively, the Engineer or the Department's representative may choose to obtain their own sample. In this case the QA sample may be taken at any time and location determined by the Department's representative in accordance with TPW TM - 6. In instances where the Department obtains their own QA sample, duplicate individual QA samples shall be obtained, sealed and labelled (in the same manner as the QC sample) by the Contractor in the presence of the Department's representative. The Contractor shall provide a front-end loader to obtain material for QA sampling where required. In the event that the Contractor is unavailable to take the sample, no further materials shall be placed in the work until the QA sample has been taken.

6.4.1.1 Sample Size. Each sample shall provide sufficient mass of material to conduct the necessary physical property or production tests. Table 3.2.4 outlines minimum sample masses that are expected to furnish reasonable quantities for most routine testing.

Table 3.2.4

Material	Minimum Mass, kg
Type 1, 1S	25
Type 2	100
Type M	50

6.4.1.2 Sample Retention. Testing of samples will be carried out at the Department's QA laboratory to determine if materials conform to the physical property and/or production requirements of this specification. In the event that duplicate QC samples are retrieved for QA testing at least three of the QC samples retrieved will be tested for each Lot. One of each of the three duplicate samples shall be randomly selected for testing by the QA laboratory and the remaining sealed samples shall be retained by the QA laboratory.

6.5 Acceptance.

6.5.1 Acceptance for Production. The Department will base product acceptance on the QA results. A tolerance will be permitted for gradation results based on the following criteria. Table 3.2.5 outlines the range of values and critical sieve sizes for the various classes of gravels. The average individual Lot results for two consecutive Lots may fall outside the specification band but within the tolerance band, without penalty. Should the average results from the third Lot fall outside the specification band but within the tolerance band the Engineer will consider this as grounds to reject all the material produced. Should the average test results for any Lot fall outside the tolerance band the Engineer will consider this as grounds to reject the Lot.

Table 3.2.5

Gravel	Sieve µm (passing)	Specification Band	Tolerance Band
Type 1	4750	20 - 50	17.5 - 52
	75	3 - 8	1.5 - 9
	75 (1)	3 - 5	1.5 - 6
Type 1S	4750	30 - 55	27.5 - 57
	75 (2)	5 - 12	4 - 12
Type 2	25 000	50 - 80	47 - 83
	4750	20 - 50	15 - 52
	75	0 - 7	0 - 8
	75 (1)	3 - 5	1.5 - 6
Type M	4750	30 - 60	28 - 62
	75	3 - 8	2 - 9

(1), (2) See table 3.2.1

6.5.2 Acceptance for Physical Properties. All gravel types shall meet the physical property requirements as outlined in Subsections 4.2 and 4.3. Materials not meeting these requirements will be rejected. The Department will base product acceptance on the QA results. The Engineer may accept the Contractor's QC results for QA as described in 6.3.2.

6.6 Appeal Procedure.

6.6.1 Physical Properties. Should the Contractor dispute the QA test results for any of the physical property requirements the Contractor may request an appeal procedure as outlined in TPW-TM-3.

6.6.2 Production. In the event that the Contractor wishes to appeal the QA test results for production the Contractor shall notify the Engineer within two working days following notification.

Option 1: Where the QA result was determined by sampling conducted by the Department the duplicate QA sample will be tested at a laboratory acceptable to both parties. The results of the duplicate QA sample will be final.

Option 2: Where the QA result was determined from the duplicate QC samples additional sampling will be required. A single set of samples will be retrieved. The results of the appeal testing on the single set of samples will be final.

6.6.3 Payment for Appeal. If the results of the appeal procedure confirm the Department's QA test results, the Contractor shall be responsible for all costs associated with appeal sampling and testing. In the event that the appeal procedure supports the Contractor's position, the Department will be responsible for all costs associated with appeal sampling and testing. Any costs associated with delays as a result of the appeal procedure are the responsibility of the Contractor.

7.0 METHOD OF MEASUREMENT

The Contractor shall, at their own expense, provide, install and maintain such approved scales and all suitable facilities as detailed in Division 1 Section 4 Subsection 7.

The quantity of Gravels Type 1, Type 1S, Type 2 and Type M placed in stockpile as indicated above, will be estimated by the Engineer.

8.0 BASIS OF PAYMENT

Gravels Type 1, Type 1S, Type 2 and Type M will be paid for at the contract unit price per tonne for Gravels. The price shall be full compensation for furnishing all materials, equipment, and labour required to carry out the handling, testing, hauling, placing and compacting of the Gravels as well as any incidentals necessary to complete the work.

Gravels Type 1, Type 1S, Type 2 and Type M placed in stockpile as indicated above will be paid for at the current rate as indicated in Appendix C.

When such materials in stockpile have been placed on the Contract the Contractor shall be paid at the unit price bid for such materials and the payments for such materials in stockpile shall be deducted and shown as a negative quantity on the progress estimate. Any gravel left in stockpile and not used on the Contract will not be paid for and shall remain the property of the Contractor.

The Contractor may be paid for gravels in stockpile when such materials cannot be placed on the Contract within a period of two months from the date of commencement of crushing such material.

9.0 WARRANTY

SECTION 1 - EMULSIFIED ASPHALT

1.0 DESCRIPTION

The Contractor shall, where directed, supply, transport and apply emulsified asphalt upon the existing asphalt concrete base or a prepared or primed surface prior to the application of asphalt concrete or graded aggregate. The Contractor shall also, where directed, supply, transport and add emulsified asphalt to Recycled Asphalt Concrete to rejuvenate the mix.

2.0 REFERENCES

All reference standards shall be current issue or latest revision at the first date of tender advertisement. This specification refers to the following standards, specifications or publications:

- ASTM D 140, Practice for Sampling Bituminous Materials
- ASTM D 244, Test Methods for Emulsified Asphalts
- Seal Coat and Surface Treatment Construction and Design Using Asphalt Emulsions, Dr N MacLeod
- Recommended Performance Guidelines, AEMA

3.0 SUBMISSIONS AND DESIGN REQUIREMENTS

3.1 Source of Supply. The Contractor shall only purchase emulsified asphalt from suppliers whose emulsion plants have been approved by the Department.

3.2 Notice of Supply. Bidders shall nominate their source of emulsified asphalt as a supplement to the tender. On the form "Statement of Performance Graded Asphalt Binder (PGAB), Liquid Asphalt - Primer and Emulsified Asphalt" Bidders shall be required to submit with their tender a statement as to the source (emulsion plant) of emulsified asphalt. The Bidder shall only nominate one source of supply of emulsified asphalt.

No tender will be considered that does not include the above information.

The Contractor is hereby advised that if the source (emulsion plant) they nominate has not been approved by the Department, then it shall be a requirement that the emulsion plant receive approval before any emulsified asphalt can be used on a Department project. In the event that the Contractor wishes to change their source of supply during the progress of the contract, the change shall be approved in writing by the District Director before the alternate source can be used.

4.0 MATERIALS

4.1 Emulsified Asphalts. These products shall conform to the specifications for RS-1, HF-150S, CRS-2 and SS-1 as detailed in Table 4.1.1 and CRS-2P, HP-200 and Non-tracking Emulsion as detailed in Table 4.1.2.

Table 4.1.1 Physical Requirements of Emulsified Asphalt

Requirements	Rapid Setting Emulsified Asphalt: RS-1		High-Float Emulsified Asphalt: HF-150S		Rapid Setting Cationic Emulsified Asphalt: CRS-2 (RS-2K)		Slow Setting Emulsified Asphalt: SS-1	
	Min	Max	Min	Max	Min	Max	Min	Max
Saybolt Viscosity[1], S	20	100					20	60
Saybolt Viscosity [2],S			35	150	150	400		
Residue[3], %	55	-	62	-	68	-	55	-
Storage Stability [4], %	-	1.5	-	1.5	-	1	-	1.5
Sieve Test[5], %	-	0.1	-	0.1	-	0.1	-	0.1
Demulsibility [6] ,%	60	-						
Demulsibility[7], %			75	-				
Particle Charge[8]	Negative		Negative		Positive		Negative	
Oil Portion[9]			0.5	4	-	3		
App Viscosity[11], Pa.s			90	3000				
Float Test[12], S			1200	-				
Solubility[13], %			97.5	-			97.5	-
Settlement in 5d[14], %					-	5		
Ductility [15], cm							60	-
Cement Mixing Test[16], %							-	2.0
Tests on Residue								
Penetration[17], 0.1 mm	100	200	150	250	100	250	100	200
Ductility[15], cm	60	-			60	-		
Solubility[13], %	97.5	-			97.5	-		

(1) ASTM D 244, tested at 25^{0}C using a Furol orifice.
(2) ASTM D 244, tested at 50^{0}C using a Furol orifice.
(3) ASTM D 244, residue from distillation and expressed as % by mass.
(4) ASTM D 244, tested in 24 hrs and expressed as % by mass.
(5) ASTM D 244, % by mass retained on a 1000 sieve.
(6) ASTM D 244, using 35 ml of 1.11 g/L $CaCl_2$ and expressed as % by mass.
(7) ASTM D 244, using 50 ml of 5.55 g/L $CaCl_2$ and expressed as % by mass.
(8) ASTM D 244, tested using 12V direct current and expressed as negative (anionic) or positive (cationic) charge.
(9) ASTM D 244, oil portion of residue from distillation and expressed as % by mass.
(10) ASTM D 244 and D 5 at 25^{0}C, 100 g and 5s.
(11) ASTM D 244 and D 2171, tested at 60^{0}C.
(12) ASTM D 244 and D 139, tested at 60^{0}C.
(13) ASTM D 244 and D 2042 using trichloroethylene and expressed as % by mass.
(14) ASTM D 244, % by mass. The test requirement for settlement may be waived when the emulsified asphalt is used in less than 5 d time.
(15) ASTM D 244 and D 113 at 25^{0}C and 5 cm/min.
(16) ASTM D 244 expressed as % by mass.
(17) ASTM D 244 and D 5 at 25°C, 100 g and 5s.

Table 4.1.2 Physical Requirements of Emulsified Asphalt

Requirements	Polymer-Modified Emulsified Asphalt: CRS-2P		Emulsified Asphalt: HP-200		Non-tracking Emulsion (Prior to Dilute)	
	Min	Max	Min	Max	Min	Max
Saybolt Viscosity[1], SFs	75	400	50	250		
SF Viscosity [2], SFs					20	
Residue, % by Mass	65 [3]	-	65 [4]	-	55 [5]	-
Settlement [6], 24 hours, %	-	1				
Settlement in 5d [7], %			-	3		
Demulsibility [8], %	40	-				
Oil Portion of Distillate, %	-	3 [9]			-	Trace
Sieve Test, % by Mass	-	0.20 [10]	-	0.10 [10]	-	0.1 [11]
Particle Charge	Positive [12]		Negative [12]		Positive or Negative	
Tests on Residue						
Penetration, 0.1 mm	100 [14]	250 [14]	100 [14]	250 [14]	20	55
Solubility [14], %	97.5	-				
Ductility [15], cm			40	-		
Ash Content[16], % by Mass of Residue	-	1.0				
Solubility [17], %			97.5	1.0		
Ash Content, %					-	1.0
Elastic Recovery @ 10ºC, %	55	-				
Spraying Temperature ºC	65	80	65	80		

[1] ASTM D 244, tested at 50ºC using Furol orifice.
[2] Residue from distillation to 260ºC.
[3] ASTM D 244, residue from distillation to 204.4ºC.
[4] ASTM D 244, residue from distillation and expressed as % by mass.
[5] Tested at 25ºC.
[6] ASTM D 244, % by mass.
[7] ASTM D 244, % by mass. The test requirement for settlement may be waived when the emulsified asphalt is used in less than 5 d time.
[8] ASTM D 244, using 35 mL Dioctyl Sodium Sulfosuccinate Solution (0.8%).
[9] ASTM D 244, % by Vol. of Emulsion
[10] ASTM D 244, % by mass retained on 1000 sieve.
[11] % by mass retained on a 850 µm sieve.
[12] ASTM D 244, tested using a 12V direct current and expressed as negative (anionic) or positive (cationic) charge.
[13] ASTM D 244, D5 at 25ºC and 100 g in 5s.
[14] ASTM D 244, D2402 using trichlorethylene and expressed as % by mass.
[15] ASTM D 244 and D 113 at 25^{0}C and 5 cm/min.
[16] ASTM D 2415, the ash content shall be determined when the manufacturer indicates that the polymer additive is not soluble in trichlorethylene.
[17] ASTM D 244 and D 2042 using trichloroethylene and expressed as % by mass.

5.0 CONSTRUCTION METHODS

5.1 General. When applying emulsions, the Contractor shall cover concrete walks, curbs, walls and adjacent surfaces along the highway with paper or other satisfactory covering and shall remove all emulsified asphalt which adheres to the concrete. No additional compensation will be allowed the Contractor for this work. Any accidental spills or any material that runs off the road surface shall be cleaned up immediately.

Emulsified asphalt shall only be applied to dry surfaces.

5.2 Application of Tack Coat. The Contractor shall clean surfaces to be tacked by means of a rotary power broom or hand brooms to remove all dirt, sand, dust or other objectionable matter. The Contractor shall apply a uniform cover of the RS-1 emulsion with a distributor at a rate of 140 ml/m^2, or non-tracking emulsion at a rate of 250 ml/m^2 to 420 ml/m^2, or as directed by the Engineer, and at a temperature not less than 20ºC nor more than 70ºC. Hot mix shall not be placed upon the tack coated areas until the tack coat has dried to a condition of tackiness where RS-1 is applied.

The non-tracking emulsion shall be Clean Bond Coat diluted with 40% water or equivalent, and shall meet the

requirement of Table 4.1.2**.** Dilution of the emulsion shall be permitted at the terminal only. Equivalent products shall be reviewed and evaluated by Highway Construction Services, which may include sample provision, lab testing and field trials prior to project level approval.

No more tack coat shall be applied than can be covered with asphalt concrete wearing surface in any one day.

5.3 Application of Emulsified Asphalt for Type B - Double Seal Coat over Gravel/Sand Seal. The Contractor shall sweep or compact the prepared gravel surface or sweep the sand seal surface as deemed necessary. Sweeping shall be done by means of a rotary power broom to remove all dirt, sand, dust or other objectionable matter. The Contractor shall apply a uniform cover of the emulsified asphalt with a distributor.

The Contractor shall determine the rate of application of the emulsified asphalt utilizing SC-3 initial course and SC-2 finial course gradations specified in Division 4 Section 12, taking into consideration such variables as the texture and absorbency of the surface, traffic density and other pertinent factors, as outlined in "Seal Coat and Surface Treatment Construction and Design Using Asphalt Emulsions", by Dr. Norman McLeod and "Recommended Performance Guidelines", by the Asphalt Emulsion Manufacturers Association.

5.4 Application of Emulsified Asphalt for Type A - Single Seal Coat over Reclaimed Asphalt Concrete/Sand Seal/Chip Seal. The Contractor shall sweep the reclaimed asphalt concrete, sand seal or chip seal surface by means of a rotary power broom to remove all dirt, sand, dust or other objectionable matter deemed necessary by the Engineer. The Contractor shall apply a uniform cover of the emulsified asphalt with a distributor.

The Contractor shall determine the rate of application of the emulsified asphalt utilizing SC-1 grading specified in Division 4 Section 12, taking into consideration such variables as the texture and absorbency of the surface, traffic density and other pertinent factors, as outlined in "Seal Coat and Surface Treatment Construction and Design Using Asphalt Emulsions", by Dr. Norman McLeod and "Recommended Performance Guidelines", by the Asphalt Emulsion Manufacturers Association.

5.5 Application of Polymer-Modified Emulsified Asphalt for Type A - Single Seal Coat over Asphalt Concrete. The Contractor shall sweep the asphalt concrete surface by means of a rotary power broom to remove all dirt, sand, dust or other objectionable matter, when deemed necessary by the Engineer. The Contractor shall then uniformly apply the polymer-modified emulsified asphalt with a distributor.

The Contractor shall determine the rate of application of the polymer-modified emulsified asphalt utilizing SC-1 grading specified in Division 4 Section 12, taking into consideration such variables as the texture and absorbency of the surface, traffic density and other pertinent factors, as outlined in "Seal Coat and Surface Treatment Construction and Design Using Asphalt Emulsions", by Dr. Norman McLeod and "Recommended Performance Guidelines", by the Asphalt Emulsion Manufacturers Association.

5.6 Pressure Distributor. The pressure distributor referred to in Subsections 5.1 to 5.4 shall be a self-powered pressure asphalt distributor, capable of applying the emulsified asphalt uniformly, at the established rate, in one application, over the full required width. It shall consist of a fully insulated tank, permanently and rigidly mounted on a truck or trailer, capable of accurately maintaining any speed required for spraying.

The distributor shall be provided with the following minimum equipment:

- Proper hand spray attachments to uniformly apply emulsion to any areas missed by the distributor.
- An efficient and positive means of heating the emulsified asphalt uniformly to any selected temperature up to 100ºC, and maintaining the contents constantly at this temperature without any local overheating and including a satisfactory method of circulating the contents during the entire heating process.
- An approved thermometer with a minimum range of 10ºC to 100ºC, graduated in intervals of not more than 10ºC, so placed as to accurately show the temperature of the distributor contents, and to be accessible to the Engineer.
- An approved tachometer, driven from a fifth wheel, mounted so that it is readily visible to the driver so that it clearly and accurately registers distances traveled when spraying emulsion, and so that it enables the driver to maintain a constant speed required to ensure the specified rate of application of the emulsion.
- A pump tachometer which registers pump output within 3%.
- A pressure gauge indicating the pressure in the spray bar within 15 kPa.
- A rear mounted spray bar set parallel to the surface to be sprayed, and capable of adjustment to provide any required spraying widths from 2.5 m to 3.5 m. The distributor shall be equipped with a spray bar heating and circulating device, to ensure uniform viscosity and pressure of the emulsified asphalt at each nozzle, both

before and during spraying operations. The spray bar shall be provided with a positive shut-off to prevent dripping.

The circulating system shall also be provided with a strainer to prevent clogging of the bar and nozzles. The spray bar height shall be adjustable and shall be set at such a height that the spray fan from any nozzle overlaps the spray fan from the adjacent nozzle by two-thirds for triple-lap so that a uniformly sprayed surface will result. This height shall be set when the distributor is one-half full, and shall be changed only when permitted by the Engineer.

Spray bar nozzles shall be designed and set so as to ensure uniform fan shaped sprays. The nozzles shall not be set so as to produce such a fine mist that the emulsified asphalt will blow away and not provide an even spread. All spray nozzles shall be of the same manufacture, size, type and in good condition and shall be provided with valves capable of instant full opening and positive cut-off. All spray nozzles shall be set in the bar so that the nozzle slots make the same horizontal angle (30º) with the longitudinal axis of the bar. Before work commences, and periodically as required during spraying operations, the nozzles on the spray bar shall be removed, cleaned sufficiently to remove all congealed asphalt and to free the nozzle opening. Each nozzle shall be inspected and approved by the Engineer and reinstalled on the spray bar at the correct angle.

A strainer shall be provided in the filling line to prevent entry of foreign material into the tank.

A sampling cock shall be fitted on the spray bar or circulating line, and shall be readily accessible to allow samples of the emulsion to be obtained directly from the distributor.

The distributor shall be checked for calibration by the Engineer before being used on the work.

An alternate means of application may be permitted for small or isolated areas at the discretion and approval of the Engineer.

6.0 QUALITY CONTROL / QUALITY ASSURANCE

The emulsified asphalt from each tanker shall be sampled in accordance with ASTM D 140 by the Department or its representatives and shall conform to the requirements as follows except when a modified emulsified asphalt is required it shall conform to the Special Provisions.

Any contamination of the emulsified asphalt and/or deviation from this specification shall be corrected to the satisfaction of the Engineer and at no cost to the Department.

Such deficiencies may be noted from samples of emulsified asphalt taken by representatives of the Department. Any necessary remedial measures shall be done by the Contractor at no expense to the Department and to the satisfaction of the Engineer.

6.1 Notification of Deliveries. To ensure that the Department has someone available to carry out sampling the Contractor shall notify the Engineer of the approximate time of delivery of all loads. For loads that are to be delivered after 5:00 p.m. on normal workdays, the Contractor shall give the Engineer notification prior to 4:00 p.m. on the day of the delivery. Notification of weekend deliveries shall be given to the Engineer before 4:00 p.m. on Friday.

7.0 METHOD OF MEASUREMENT

The volume of emulsified asphalt shall be calculated at a temperature of 15ºC**.**

8.0 BASIS OF PAYMENT

The emulsified asphalt will be paid for at the contract unit price per litre or kilolitre in place, except when specified to be included in the unit price per tonne for asphalt concrete. The unit price shall be full compensation for supplying, cleaning the surface before application, heating, handling, transporting, and applying of this material and the furnishing of all equipment, and labour incidental to the work.

9.0 WARRANTY

SECTION 2 - PERFORMANCE GRADED ASPHALT BINDER (PGAB)

1.0 DESCRIPTION

This item shall include the supply and transportation of various grades of Performance Graded Asphalt Binder (PGAB) to the Contractor's plant that is used in the manufacture of asphalt concrete and is accepted in place.

Performance Graded Asphalt Binder (PGAB): refers to an asphalt binder which is an asphalt-based cement that is produced from petroleum residue either with or without the addition of non-particulate organic modifiers.

Quality Control (QC) and Quality Assurance (QA) procedures are described herein. The Contractor shall be responsible to submit the QC test results and to ensure that all materials meet specification.

Initial acceptance of PGAB shall be based on samples taken and tested by the supplier's designated laboratory, subject to the conditions detailed in this specification.

To determine final acceptance of the product, the Department will conduct QA testing to confirm test results supplied by the Contractor by testing random samples taken from the Contractors' binder storage tank(s) located at the hot mix plant.

2.0 REFERENCES

All reference standards shall be current issue or latest revision at the first date of tender advertisement. This specification refers to the following standards, specifications or publications:

- AASHTO M332, Performance Graded Asphalt Binder Using Multiple Stress Creep Recovery (MSCR) Test
- AASHTO R29, Grading or Verifying the Performance Grade of an Asphalt Binder
- ASTM D140, Practice for Sampling Bituminous Materials
- ASTM D3665, Standard Practice for Random Sampling of Construction Materials

3.0 SUBMISSIONS AND DESIGN REQUIREMENTS

3.1 Notice of Supply. Bidders shall nominate their source of PGAB and provide a Statement of Supplier's price for PGAB as a supplement to the tender. On the form "Statement of PGAB, Liquid Asphalt-Primer and Emulsified Asphalt-Tack", Bidders shall:

- Submit with their tender a statement as to the source of PGAB. The Bidder shall only nominate one source of supply of PGAB. The Supplier must be on the Department's list of approved suppliers.
- Indicate the Supplier's Posted Rack Price for PGAB FOB refinery (excluding taxes). For confirmation, the Bidder shall attach the written price quotation from the Supplier, which price shall be effective at time of award of contract and shall remain in effect until the end of the current calendar year.

No tender shall be considered that does not include the above information.

3.2 Contracts Completed in Calendar Year. In the event that the Contractor wishes to change the source of supply during the progress of the contract, the Contractor shall apply for approval, in writing, to the District Director. Approval in writing must be given by the District Director before the source of supply is changed.

The Contractor shall not be compensated for any increase in the cost of PGAB in the calendar year in which the asphalt work was initially intended to be done.

3.3 Contracts Carried Over to The Next Calendar Year. In the event the Supplier's Posted Rack Price increases or decreases subsequent to the end of the calendar year in which the asphalt work was initially scheduled and one of the following conditions is satisfied, then a price increase or decrease will be considered:

- In the opinion of the Department, a delay caused by another Contractor working on the contract site adversely affects the start-up date of the Contract resulting in the completion of paving being delayed until the following year; or
- In the opinion of the Department, the lateness in tender call makes it unreasonable for the Contractor to finish asphalt work that year. This will be noted in the Special Provisions of the contract; or

- In the opinion of the Department, for reason(s) beyond the control of the Contractor, the work could not be completed before the end of the calendar year in which the work was initially intended to be completed.

If the request for a price increase or decrease is approved by the District Director the Contractor will be assessed an increase or decrease for an amount equal to the actual dollar difference between the Supplier's original Posted Rack Price quotation and the Supplier's new Posted Rack Price for PGAB. In all cases the Supplier's Posted Rack Price quotation for the price of PGAB for the next calendar year shall be submitted to the Engineer before the Contractor will be paid for any PGAB used that year. Any claim for a price difference by the Contractor shall be supported by the Supplier's invoice.

4.0 MATERIALS

4.1 Physical Requirements. The PGAB as outlined in Table 4.1.1 shall conform (including any liquid anti-stripping additive, or other approved additives) to the requirements of AASHTO M332 for the performance grade specified in the Contract when tested using the test methods designated in AASHTO R29, except for Clause 7.5 the RTFO residue will be tested using MSCR as per AASHTO T350 at the test temperature indicated by the high temperature grading designation to confirm $J_{nr3.2}$, J_{nrdiff}, and $R_{3.2}$ values (if applicable) of the asphalt binder do not exceed the maximum value according to the traffic grade designation as per Table 4.1.1.

4.2 General Requirements. The PGAB shall be homogeneous, free of water and any contamination and shall not foam when heated to the temperatures specified by the manufacturer for the safe handling and use of the product.

4.3 Approved Suppliers. PGAB shall be obtained from a Supplier approved by the Department. Approved Suppliers will be identified in the Contract Special Provisions.

5.0 CONSTRUCTION METHODS

5.1 Tankers, Storage Tanks. Tankers used to transport PGAB and PGAB storage tanks located at asphalt concrete mixing plants shall meet the following requirements:

- Be free from hydrocarbon fuels or solvents, such as gasoline, diesel, varsol, gasoline, etc.
- Have a sampling spigot as outlined in ASTM D 140.
- Be equipped with thermometers, accurate and capable of reading to the nearest 2°C.

6.0 QUALITY CONTROL / QUALITY ASSURANCE

6.1 PGAB Documentation. For each grade of PGAB specified in the Contract, the Contractor shall supply the current test result data to the Project Engineer prior to the first use of the product(s). The product shall have been graded by conducting the required tests of AASHTO R29, Section 7, except that in Clause 7.5 the RTFO residue will be tested via MSCR per AASHTO T350 at the test temperature indicated by the high temperature grading designation to confirm the $J_{nr3.2}$, J_{nrdiff}, and $R_{3.2}$ (if applicable) of the asphalt binder does not exceed the maximum value according to the traffic grade designation.

The Contractor shall provide the applicable mixing and laboratory compaction temperatures for each product, and documentation of construction, storage and handling requirements, including the material safety data sheet, laboratory compaction temperature, mix discharge temperature and recommended extraction procedure.

6.2 Laboratory Proficiency. The laboratory conducting the QC testing shall have participated in the most recent AASHTO proficiency sample correlation program for PGAB, and shall have obtained proficiency ratings in the program satisfactory to the Department. Alternatively, the laboratory shall have satisfactorily participated in any equivalent correlation program acceptable to the Department. Documentation of the laboratory's participation and proficiency shall be provided to the Department upon request.

6.3 Anti-Stripping Additive. When a liquid anti- stripping agent is to be incorporated into the mix, samples of PGAB for QC and QA are to be taken after the anti-stripping agent has been added to the PGAB.

6.4 Samples for Testing. All QA samples shall be a minimum size of one litre and shall be taken from the Contractor's storage tank in accordance with ASTM D140 and witnessed by the Department's representative. An additional sample shall be taken in the event an appeal test is required. The random number information pertaining to the hot mix tonnage at which the PGAB is required to be sampled shall be supplied by the Department.

The Department will verify the sampling, package and transport all samples (including appeal samples) for QA testing

6.5 Quality Control Plan. The Contractor shall provide a QC Plan to the Project Engineer detailing the quality control activities related to the use of PGAB. A supplier's QC Plan may be used for this purpose, provided that specific storage/handling details, etc. are furnished by the Contractor. The QC Plan shall be submitted within seven calendar days prior to the first use of the product(s). Hot mix production shall not commence until the QC Plan is accepted by to the Department.

As a minimum, the QC Plan shall provide the following information:

- The type of facility from which the product(s) will be supplied (refinery, terminal) and its location.
- The method and frequency for initial testing, specification compliance testing and any other testing employed to either guide the manufacturing process of the PGAB or to ensure the on-going compliance of the product(s) to Table 4.1.1.
- If specification compliance testing is carried out prior to shipping the product(s) from the supplier's facility to the hot mix plant, the QC Plan shall provide an outline of the procedures to be followed for checking transport vehicles before loading to prevent contamination of shipments.
- A certification that the PGAB supplied for use on Department projects does not contain re-refined engine oil bottoms (REOB).
- The QC Plan shall provide an outline of procedures detailing how anti-strip additives will be incorporated in the product(s) and how anti-strip additive products and dosage rates will be identified on shipping documentation. Tests employed to ensure compliance of the product(s) to Table 4.1.1 after anti-strip additives are incorporated in the product(s) shall be identified.
- The QC Plan shall identify the QC laboratory and detail control charting or any such statistical procedures which will be used to track the quality of the product(s).
- The QC Plan shall detail the methods to be used to identify and provide for the exclusion of materials which do not conform to specifications, prior to incorporating into the hot mix. The QC Plan shall also detail how such materials will be identified and dealt with if they are inadvertently incorporated into the hot mix. The QC Plan shall detail how such occurrences will be documented, and the methods of disposition of such materials.

6.6 Basis of Initial Acceptance. Initial acceptance of PGAB will be based on QC test results submitted by the Contractor, subject to the conditions specified herein. The Contractor shall be responsible to submit the supplier's QC test result data and to ensure that all materials meet specification. The supplied product shall meet all the requirements of AASHTO M332 when the product is tested in accordance with the methods of AASHTO R29, Section 7, "Test Procedure for Verifying the Nominal Grade of an Asphalt Binder".

For initial acceptance purposes, a minimum of one complete AASHTO M332 compliance test shall be performed for each Supplier batch of PGAB.

6.6.1 Sampling Frequency. PGAB samples shall be obtained for, and shall be representative of, every 5000 tonnes of hot mix asphalt produced, or any part thereof.

6.6.2 Quality Assurance. QA testing will be carried out by the Department for the purposes of ensuring that the materials used in the work conform to the quality requirements of Table 4.1.1. If a QA test result for any sample indicates non-compliance with the specification, the Department will advise the Contractor of the test result and may conduct classification testing. The additional testing will determine the actual performance low temperature of the sample(s), rounded to the nearest 0.5 degrees Celsius, and the $J_{nr3.2}$, J_{nrdiff}, and $R_{3.2}$ (if applicable) at the test temperature indicated by the high temperature and traffic grading designations of the PGAB, rounded to the nearest 0.01 kPa^{-1} and 0.1%, as applicable.

Test results for samples which do not comply with the performance grading requirements shall be categorized based on individual deviations from the design minimum temperature, creep compliance, and percent recovery requirements defined as per the following Tables. Price adjustments, where applicable, will be cumulative and will be expressed as a percentage of the Contractor's unit bid price for the PGAB within the given sample quantity.

Low Temperature Deficiency (°C) Price Adjustments

Traffic Level	Price Adjustments (% of PGAB Price)			
	- 10%	**- 20%**	**- 50%**	**Reject**
All	0.5 °C to 1.0 °C	1.5 °C to 2.0 °C	2.5 °C to 3.0 °C	≥ 3.5 °C

*** Note:** Actual low temperature performance grades which are lower than the minimum design temperature will be accepted at full price.

$J_{nr3.2}$ (kPa^{-1}) Price Adjustments

Traffic Level	Price Adjustments (% of PGAB Price)					
	+ 10%	0%	- 10%	- 25%	- 50%	Reject
S	N/A	2.00 kPa^{-1} to 4.50 kPa^{-1}	4.51 kPa^{-1} to 4.73 kPa^{-1}	4.74 kPa^{-1} to 4.95 kPa^{-1}	4.96 kPa^{-1} to 6.75 kPa^{-1}	> 6.75 kPa^{-1}
H	< 1.00 kPa-1	1.00 kPa^{-1} to 2.00 kPa^{-1}	2.01 kPa^{-1} to 2.10 kPa^{-1}	2.11 kPa^{-1} to 2.20 kPa^{-1}	2.21 kPa^{-1} to 3.00 kPa^{-1}	> 3.00 kPa^{-1}
V	< 0.50 kPa-1	0.50 kPa^{-1} to 1.00 kPa^{-1}	1.01 kPa^{-1} to 1.05 kPa^{-1}	1.06 kPa^{-1} to 1.10 kPa^{-1}	1.11 kPa^{-1} to 1.50 kPa^{-1}	> 1.50 kPa^{-1}
E	N/A	0.01 kPa^{-1} to 0.50 kPa^{-1}	0.51 kPa^{-1} to 0.53 kPa^{-1}	0.53 kPa^{-1} to 0.55 kPa^{-1}	0.56 kPa^{-1} to 0.75 kPa^{-1}	> 0.75 kPa^{-1}

$R_{3.2}$ (%) Price Adjustments

Traffic Level	Price Adjustments (% of PGAB Price)				
	0%	- 5%	- 10%	- 25%	- 50%
All	≥ 100.0% of minimum per Table 4.1.1, Note g.	95.0% to 99.9% of minimum per Table 4.1.1, Note g.	90.0% to 94.9% of minimum per Table 4.1.1, Note g.	75.0% to 89.9% of minimum per Table 4.1.1, Note g.	< 75.0% of minimum per Table 4.1.1, Note g.

6.6.3 Disposition of Reduced/Rejected Lots. The Department will review the test results and determine the disposition of the mix constructed using any PGAB product which does not conform to Table 4.1.1. Hot mix constructed using PGAB for which test results indicate that the product did not conform to specification will be dealt with as follows:

Price Reductions: As per the above tables.

Rejection: The Department reserves the right to reject all asphalt concrete mix produced with:

- PGAB sample low temperature deviations exceeding 3.0 °C;
- PGAB sample high temperature $J_{nr3.2}$ values exceeding the maximum specified value for each traffic designation by more than 50%;

Rejected quantities of hot mix asphalt represented by the PGAB samples shall be removed and replaced at the Contractor's expense.

The full thickness of the appropriate lift of pavement shall be removed by cold milling. The asphalt concrete mix used to replace the rejected pavement shall meet the same requirements as those originally specified. Repair areas will be re-tested for acceptance with the cost of re-testing to be borne by the Contractor.

6.7 Appeal Testing. The Contractor shall serve notice of appeal to the Project Engineer, in writing, within 48 hours of receipt of the QA test results. Appeal re-testing may be carried out on set-aside samples only if the cost of the impact of non-compliance, as determined by the Project Engineer, exceeds the cost of re-testing.

The Contractor may have a representative present during testing at the Department's QA facility. During the period of testing, the Contractor's representative shall comment on anything concerning the testing which they do not consider to be valid and the Project Engineer shall respond to all comments to resolve them.

The appeal testing will determine the actual performance low temperature, rounded to the nearest 0.5 degrees Celsius, and the $J_{nr3.2}$, J_{nrdiff}, and $R_{3.2}$ (if applicable) at the at the test temperature indicated by the high temperature grading designation of the PGAB, rounded to the nearest 0.01 kPa^{-1} and 0.1%, as applicable. The outcome of the appeal testing is binding on the Department and the Contractor.

The cost of the appeal testing, including sample delivery, shall be borne by the Contractor unless the testing confirms total conformance of the material sample to contract specifications, in which case the cost will be borne by the Department.

7.0 METHOD OF MEASUREMENT

The quantity of PGAB to be paid for under this section shall be calculated based on the PGAB delivered to the plant. The Department will not reimburse the Contractor for PGAB that is used in private work or any that is wasted as calculated on the weekly asphalt report. Adjustments will be made for initial and final tank measurements corrected to 15ºC.

Plants that produce a large percentage of asphalt concrete for private work, such as in the Halifax- Dartmouth area and the Sydney area, will be paid for supply and transportation as calculated by the Field Adjusted Mix Design. The tonnages thus calculated will be payable to the Contractor.

8.0 BASIS OF PAYMENT

The supply and transportation of PGAB will be paid for at the contract unit price per tonne of PGAB, except when specified to be included in the unit price per tonne for asphalt concrete. This price shall be compensation for all expenses that may be incurred in the supply, transport and delivery of the PGAB to the Contractor's plant.

9.0 WARRANTY

Table 4.1.1 - Performance Graded Asphalt Binder Specification[a]

Performance Grade	PG 52							PG 58				
	10	16	22	28	34	40	46	16	22	28	34	40
Average 7-day max pavement design temp,°C[b]	<52							<58				
Minimum Pavement Design Temperature, °C[b]	>-10	>-16	>-22	>-28	>-34	>-40	>-46	>-16	>-22	>-28	>-34	>-40
Original Binder												
Flash Point Temperature, T48, min °C	230											
Viscosity, AASHTO T316[c] Max 3 Pa•s, test temp, °C	135											
Dynamic Shear, AASHTO T315:[d] G*/sinδ, min 1.00 kPa[e] Test temp @ 10 rad/s, °C	52							58				
Rolling Thin-Film Oven Residue (T240)												
Mass change, Maximum, %[f]	1.00											
MSCR, AASHTO T350: Standard Traffic "S" $J_{nr3.2}$, max 4.50 kPa^{-1} J_{nrdiff}, max 75.0% Test Temp, °C	52							58				
MSCR, AASHTO T350: Heavy Traffic "H" $J_{nr3.2}$, max 2.00 kPa^{-1} J_{nrdiff}, max 75.0% $R_{3.2}$ (See Note g) Test Temp, °C	52							58				
MSCR, AASHTO T350: Very Heavy Traffic "V" $J_{nr3.2}$, max 1.00 kPa^{-1} J_{nrdiff}, max 75.0% $R_{3.2}$ (See Note g) Test Temp, °C	52							58				
MSCR, AASHTO T350: Extremely Heavy Traffic "E" $J_{nr3.2}$, max 0.50 kPa^{-1} J_{nrdiff}, max 75.0% $R_{3.2}$ (See Note g) Test Temp, °C	52							58				
Pressurized Aging Vessel Residue (R28)												
PAV aging temp, °C[h]	90							100				
Dynamic Shear, T315: Traffic Level "S" G*sinδ, max 5,000 kPa[e] Test Temp @ 10 rad/s, °C	25	22	19	16	13	10	7	25	22	19	16	13
Dynamic Shear, T315: Traffic Levels "H", "V", and "E" "S" G*sinδ, max 6,000 kPa[e] Test Temp @ 10 rad/s, °C	25	22	19	16	13	10	7	25	22	19	16	13
Creep Stiffness, T313:[i] S, max 300 MPa m-value, min 0.300 Test Temp @ 60 s, °C	0	-6	-12	-18	-24	-30	-36	-6	-12	-18	-24	-30
Direct Tension, T314:[i] Failure strain, min 1.0% Test Temp @ 1.0 mm/min, °C	0	-6	-12	-18	-24	-30	-36	-6	-12	-18	-24	-30

a. Pavement temperatures are estimated from air temperatures using an algorithm contained in the LTPPBind program, may be provided by the specifying agency, or by following the procedures as outlined in AASHTO M323 and R35.

b. This requirement may be waived at the discretion of the specifying agency if the supplier warrants that the asphalt binder can be adequately pumped and mixed at temperatures that meet all applicable safety standards.

c. For quality control of unmodified PGAB production, measurement of the viscosity of the original PGAB may be used to supplement dynamic shear measurements of G*/sinδ at test temperatures where the asphalt is a Newtonian fluid.

d. The PAV aging temperature is based on simulated climatic conditions and is one of three temperatures 90ºC, 100ºC or 110ºC. The PAV aging temperature is 100ºC for PG58- and above, except in desert climates, where it is 110ºC.

e. Physical Hardening - AASHTO T313 is performed on a set of asphalt beams according to Section 13.1, except the conditioning time is extended to 24 hrs ± 10 minutes at 10ºC above the minimum performance temperature. The 24-hour stiffness and m-value are reported for information purposes only.

f. If the creep stiffness is below 300 MPa, the direct tension test is not required. If the creep stiffness between 300 and 600 MPa the direct tension failure strain requirement can be used in lieu of the creep stiffness requirement. The m-value requirement must be satisfied in both cases.

g. G*/sinδ = high temperature stiffness and G*sinδ = intermediate temperature stiffness.

SECTION 3 - ASPHALT CONCRETE CURBS & GUTTERS

1.0 DESCRIPTION

Asphalt concrete for curbs, gutters and drains shall consist of carefully controlled hot-laid plant mix of asphalt cement and dense graded quality aggregate thoroughly mixed and then compacted to a uniform density. It shall be placed on a prepared base in conformity with the lines, grades and cross-sections as shown in the plans herein and as directed by the Engineer.

2.0 REFERENCES

All reference standards shall be current issue or latest revision at the first date of tender advertisement. This specification refers to the following standards, specifications or publications:

- Division 3 Section 5, Compaction of Gravels
- Division 4 Section 1, Emulsified Asphalt
- Division 4 Section 2, PGAB
- Division 4 Section 4, Asphalt Concrete-Hot Mixed-Hot Placed
- Division 4 Section 19, Asphalt Concrete End Product Specification (EPS)
- Drawing S-2006-025.
- Drawing S-2009-023

3.0 SUBMISSIONS AND DESIGN REQUIREMENTS

At the discretion of the Engineer an asphalt concrete mix design for Type B or Type C may be provided as detailed in Division 4 Section 4 or an existing plant mix may be used.

4.0 MATERIALS

4.1 Aggregate. The aggregate shall conform to the specifications detailed in Division 4 Section 4 or Division 4 Section 19 for asphalt concrete Type E. When gutter mix is placed using an asphalt road spreader or spreader attachment in conjunction with the road paving operation, the Engineer may approve the use of Type B or Type C asphalt concrete.

4.2 Asphalt Binder. Unless otherwise specified, the asphalt binder shall be PGAB 58-28. The Contractor shall supply and transport all PGAB used in the manufacture of asphalt curbs and gutters in accordance with Division 4 Section 2. The asphalt concrete shall contain 6.0 to 9.0% asphalt binder by mass of total mix. When gutter mix is placed in conjunction with road paving using the road spreader or spreader attachment the asphalt binder type and amount will be as specified for the Type B or Type C mix.

4.3 Asphalt Concrete. The production, transportation and placement of the asphalt concrete shall conform to the requirements of Division 4 Section 4.

5.0 CONSTRUCTION METHODS

5.1 Curb. The contractor shall construct curb according to Drawing S-2006-025 in specified locations. The machine used for placing the curb shall be self-powered and capable of extruding and compacting the asphalt concrete to the line, grade and cross-section shown on the plans or otherwise specified.

The surface on which the curb is to be placed shall be dry and free from all loose and foreign material. A tack coat shall be applied to the surface at a rate of 500 to 800 ml/m^2. For proper support on the pavement edge, the back of the curb should be a minimum of 150 mm from the edge unless otherwise specified by the Engineer.

5.2 Gutter. The Contractor shall construct asphalt concrete gutter as and where directed according to the Department plan for Asphalt Concrete Gutter, Drawing S-2009-023 or to such other dimensions approved by the Engineer.

Where the gutter is to be placed on a granular base the base material shall be graded to the shape of the gutter and then compacted as detailed in Division 3 Section 5 except that the size of the control strip may be modified at the direction of the Engineer.

In areas where the gutter is to be placed subsequent to road surface paving, tack coat conforming to the requirements of Division 4 Section 1 of these specifications shall be applied to the edge of the previously placed asphalt concrete pavement at a rate of 500 to 800 ml/m^2 before the asphalt concrete gutter is placed.

Upon completion of placing and shaping, the asphalt concrete for gutter shall be compacted to 94% of the theoretical maximum relative density or to the satisfaction of the Engineer.

6.0 QUALITY CONTROL / QUALITY ASSURANCE

7.0 METHOD OF MEASUREMENT

7.1 Curb. The quantity of curb for which payment will be made shall be the length placed as measured along the line and grade of the curb. Modified curb sections across driveways are to be included in the measurement.

7.2 Gutter. The quantity of gutter for which payment will be made shall be the length placed as measured along the line and grade of the gutter. Length of offtakes will be measured from back of longitudinal gutter to outlet and added to the length of longitudinal gutter.

8.0 BASIS OF PAYMENT

8.1 Gutter Placed During Paving Operation. Payment will be made at the contract unit price per linear metre for asphalt concrete gutter plus tonne of asphalt concrete placed to construct the gutter. The asphalt concrete will be paid at the contract unit price per tonne of surface mix.

Payment shall include the cost of furnishing all labour, tack coat, aggregate, blend sand and equipment necessary to satisfactorily complete the work.

8.2 Curb and Gutter Placed Subsequent to the Paving Operation. Payment will be made at the contract unit price per linear metre for asphalt concrete curb and gutter plus tonne of asphalt concrete used to construct the curb and gutter. The asphalt concrete will be paid at the contract unit price per tonne of asphalt concrete used.

Payment shall include the cost of furnishing all labour, tack coat, aggregate, blend sand and equipment necessary to satisfactorily complete the work.

8.3 Supply and Transportation of PGAB. PGAB will be paid for at the contract unit price per tonne as outlined in Division 4 Section 2, Subsection 8.0 Basis of Payment.

9.0 WARRANTY

SECTION 4 - ASPHALT CONCRETE HOT MIXED - HOT PLACED (METHOD SPECIFICATION)

1.0 DESCRIPTION

Asphalt concrete is defined as a carefully controlled mixture of PGAB and mineral aggregate thoroughly mixed to be free from segregation and contamination and then placed and compacted to a uniform density and smooth finish. This section includes requirements applicable to: quality control, materials, manufacturing, transportation, placing, compaction, finishing, measurement and payment of asphalt concrete.

2.0 REFERENCES

All reference standards shall be current issue or latest revision at the first date of tender advertisement. This specification refers to the following standards, specifications or publications:

- 1981 Asphalt Paving Plant Regulations
- Asphalt Institute Manual Series 2 (MS-2)
- AASHTO M 156, Requirements for Mixing Plants for Hot-Mixed, Hot-Laid Bituminous Paving Mixtures
- AASHTO T 283, Resistance of Compacted Bituminous Mixture to Moisture Induced Damage
- ASTM C 88, Test Method for Soundness of Aggregates by use of Sodium Sulfate or Magnesium Sulfate
- ASTM C 117, Test Method for Material Finer Than 75μm (No. 200) Sieve in Mineral Aggregates by Washing
- ASTM C 127, Test Method for Specific Gravity and Absorption of Coarse Aggregate
- ASTM C 128, Test Method for Specific Gravity and Absorption of Fine Aggregate
- ASTM C 131, Test Method for Resistance to Degradation of Small-Size Coarse Aggregate by Abrasion and Impact in the Los Angeles Machine
- ASTM C 136, Method for Sieve Analysis of Fine and Coarse Aggregates
- ASTM C 207, Specification for Hydrated Lime
- ASTM D 75, Practices for Sampling Aggregates
- ASTM D 140, Practice for Sampling Bituminous Materials
- ASTM D 546, Test Method for Sieve Analysis of Mineral Filler for Road and Paving Materials
- ASTM D 2041, Test Method for Theoretical Maximum Specific Gravity and Density of Bituminous Paving Mixtures
- ASTM D 2726, Test Method for Bulk Specific Gravity of Compacted Bituminous Mixtures Using Saturated Surface-Dry Specimens
- ASTM D 2950, Test Method for Density of Bituminous Concrete in Place by Nuclear Method
- ASTM D 3203, Standard Test Method for Air Voids in Compacted Bituminous Paving Mixtures
- ASTM D 3515, Specification for Hot-Mixed, Hot-Laid Bituminous Paving Mixtures
- ASTM D 4469, Method for Calculating Percent Asphalt Absorption by the Aggregate in an Asphalt Paving Mixture
- ASTM D 4791, Flat Particles, Elongated Particles, or Flat and Elongated Particles in Coarse Aggregate
- ASTM D 6926, Standard Practice for Preparation of Bituminous Specimens Using Marshall Apparatus
- ASTM D 6927, Standard Test Method for Marshall Stability and Flow of Bituminous Mixtures
- ASTM D 7113, Standard Test Method for Density of Bituminous Mixtures in Place by the Electromagnetic Surface Contact Methods
- Division 4 Section 1, Emulsified Asphalt
- Division 4 Section 2, PGAB
- Environmental Protection Act
- Occupational Health and Safety Act
- TPW TM-2, Modified Petrographic Analysis
- TPW TM-3, Fractured Particle Test

The limits of placing, spread rate and the Mix Type shall be as stated in the Special Provisions.

3.0 SUBMISSIONS AND DESIGN REQUIREMENTS

3.1 Certificate of Approval for Asphalt Plant. The Contractor shall obtain a certificate of approval for the Asphalt Concrete Plant from the Nova Scotia Department of the Environment prior to the commencement of work.

3.2 Mix Design. The asphalt concrete shall conform to the requirements specified herein and in the Special Provisions when tested in accordance with procedures provided in the latest edition of the Asphalt Institute Manual Series 2 (MS-2) with the exception when calculating asphalt absorption, ASTM D4469, Method for Calculating Percent Asphalt Absorption by the Aggregate in an asphalt paving mixture shall be followed.

The Contractor shall have a minimum of 1000 t of coarse aggregate and 1000 t of fine aggregate placed in stockpiles before samples for mix design purposes will be taken.

The Department or its representative will obtain samples of the aggregate and any additives and undertake the mix design. In all cases, a minimum of 14 days will be required for design purposes after the samples have been taken.

An initial design for all mixes (high friction and conventional) will be based on the use of aggregate sources as selected by the Contractor and will require the use of blending sand from additional sources where possible. A maximum of 15% blend sand may be used in the mix design for high friction and conventional mixes, however, the amount of blend sand eligible for haul payment shall be the actual tonnage of blend sand used on a daily basis, or up to 10% by mass of the total mix in which the blend sand was required. If the blend sand design does not meet the gradation requirements of Table 4.4.4, the Contractor shall make adjustments to meet the requirements of Table 4.4.4 and Table 4.4.1. The results of each mix design will be provided to the Contractor.

Table 4.4.1 - **Physical Requirements of Asphalt Concrete**

Item	Standard	Requirements	Application Road Class	Mix Type
Marshall Stability[(1)] @ 60˚C, kN	ASTM D 6927	MIN - 7.5	Freeway, Arterial, Truck Route	A,B,B-HF, C, C-HF & D
		MIN - 6.0	Collector	B,C & D
		MIN - 4.5	Local	B,C, & D
Marshall Flow, mm	ASTM D 6927	2 - 4[(3)]		A,B,B-HF, C, C- HF, D& E
Voids in Mineral Aggregate[(2),], %	ASTM D 2041, ASTM D 4469	MIN - 15		D-HF, D & E
		MIN - 14		C,C-HF
		MIN - 13		B & B-HF
		MIN - 12		A
Air Voids, %	ASTM D 2041	3 - 5		A,B,B-HF, C, C-HF,D & E
VFA [(4)], %		65 - 78		A,B,B-HF, C, C-HF,D & E

(1) Each Marshall specimen shall receive 75 blows on each face.
(2) Bulk Specific Gravity calculated on Oven Dry basis
(3) Equivalent to 8-16 Marshall units (units of 0.25 mm each)
(4) VFA will be 70-80% for roads of <1000 AADT.

3.2.1 Field Adjusted Mix Design. The final laboratory mix design will be implemented as the initial trial for plant mix with any necessary adjustments immediately being made by the Department or its representative. These adjustments will be documented as the Field Adjusted Mix Design (FAMD). Any additional adjustments will result in an additional documented FAMD. Copies of all FAMD will be provided to the Contractor.

All Field Adjusted Mix Designs shall meet the requirements of Table 4.4.4, Table 4.4.1 (except Marshall Stability & Flow as these parameters only apply to the laboratory mix design) and Subsection 3.2.2. All quality control tests will be measured against the documented FAMD.

3.2.2 Mix Tolerance. The maximum permissible variation from the Field Adjusted Mix Design for gradation (total aggregate) and PGAB content in percent by mass shall be as follows:

- 5 000 sieve and large ± 5
- Held on 1250 sieve ± 3
- Held on 160 sieve ± 2
- Held on 80 sieve ± 1
- PGAB ± 0.3

3.3 Additives. Additives shall not be used in the mix without the approval of the Engineer. Any additive intended for use shall be incorporated in the mix design in the proportion to be used during production and in accordance with the

Manufacturer's specifications. If silicone is being added to the PGAB then care shall be taken to ensure that it is being added at only one location i.e. at the refinery, in the tanker truck, or at the plant.

The Department may permit the use of antistripping agents.

All additives, except anti-stripping additives, shall be included in the unit price for Asphalt Concrete**.**

3.4 Asphalt Concrete Stripping. The Contractor is hereby advised that if their aggregate for asphalt concrete is moisture susceptible they shall have the option of either using a liquid anti-stripping additive from the Department's list of acceptable products, using hydrated lime, or changing their source of aggregate.

The Department may determine that an anti-stripping additive is required if one of the following conditions occurs:

- The long-term tensile strength ratio of the asphalt concrete as per AASHTO T 283 is less than 0.73
- Material that has been conditioned per AASHTO T 283 meets the 0.73 minimum requirement but a visual examination indicates there is evidence of stripping
- If based on past performance the aggregate source is known to be prone to stripping

3.4.1 Testing Rejected Aggregate Incorporating Anti-Stripping Agents. If the aggregate for asphalt concrete fails the Stripping Test, the Contractor at their own expense for all related testing, may request through the Project Engineer that the Department's Quality Control Consultant conduct a second set of Stripping Tests, this time incorporating an anti-stripping agent. Approval to use an anti-stripping agent will only be given if it is determined from this testing that the long term TSR of the mix with an anti-stripping agent equals or exceeds 0.73 and the visual examination indicates there is no evidence of stripping. The Contractor shall also demonstrate the capability of properly adding hydrated lime to the mix at the hot-mix plant if hydrated lime is proposed for use as an anti-stripping agent. If the TSR is still less than 0.73, the aggregate will be rejected and the Contractor shall locate another aggregate source.

3.4.2 Approval of Anti-Stripping Agents. In all cases a minimum of 14 working days are required to perform the stripping test after the aggregates have been received by the inspection company. An additional 14 working days will be required for re-testing of aggregate with an anti-stripping agent. The Contractor shall provide the anti-stripping agents to be utilized in all testing as well as any technical information and Manufacturer's recommended addition rates.

3.4.3 Addition of Liquid Anti-Stripping Additive. The liquid anti-stripping additive shall be added at a rate as determined by the mix design to the PGAB at the Supplier's depot, concurrently, with loading of the PGAB into the Carriers tanker. Any other methods of adding liquid anti-stripping additive shall be subject to the approval of the Engineer. The Contractor shall be required to demonstrate the method to the Engineer before approval will be considered.

The Contractor shall supply in writing to the Department, the supplier's name, product name and percentage of liquid anti-stripping additive used for each tanker load of PGAB delivered to the Contract.

3.4.4 Pavers Placing Asphalt Containing Liquid Anti-Stripping Agents. If required, and the Contractor elects to use a liquid anti-stripping additive, all pavers used to place asphalt concrete containing liquid anti-stripping additive shall be equipped with an engineered control ventilation system with a minimum controlled indoor capture efficiency of 80%.

3.4.5 Weather Conditions on Projects Containing Liquid Anti-Stripping Additives. If required, and the Contractor elects to use a liquid anti-stripping additive, the Contractor is advised that special precautions and scheduling of work may be necessary to effectively and safely produce and place asphalt concrete.

Contractors are advised that certain weather conditions such as fog, high humidity or rain require special precautions and these conditions may necessitate a shutdown of operations.

If the Project Engineer determines that weather conditions are not acceptable, asphalt concrete shall not be placed. The Department takes no responsibility for costs associated with job shutdowns and asphalt concrete which is not placed as a result of unacceptable weather conditions.

3.4.6 Payment for Liquid Anti-Stripping Additives. If required, and the Contractor elects to use a liquid anti-stripping additive, the Department will pay an amount as specified in the Contract Special Provisions for the use of an acceptable liquid anti-stripping agent which shall be full compensation for supplying, transporting and all related costs and labour incidental to the work.

If required, and the Contractor elects to use a hydrated lime as an anti-stripping additive, the Department will pay an amount as specified in the Contract Special Provisions for the use of hydrated lime which shall be full compensation for supplying, transporting and all related costs and labour incidental to the work.

4.0 MATERIALS

4.1 Aggregates. The aggregates shall be crushed pit run or quarried stone or slag and sand conforming to the quality requirements as stated herein and shall be free from coatings of clay, silt or other deleterious material.

4.1.1 Supply of Aggregates. It shall be the Contractor's responsibility to locate, procure and/or manufacture and deliver all aggregates, including blend sand or blending stone, required to meet the specified combined aggregate gradation requirements or to meet other specified properties of the aggregate and of the asphalt concrete. Promptly after receiving notice of award of contract, the Contractor shall inform the Engineer of the location of all aggregate sources.

Preliminary or previous approval of any aggregate shall not constitute a final approval of that aggregate.

4.1.2 Blend Sand. A definition of blend sand is as follows: Blend sand is a material added to a mix for the purpose of enhancing mix properties and workability. Blend sand may be either a natural uncrushed fine aggregate or a manufactured sand.

The maximum amount of natural uncrushed fine aggregate used as a blend sand shall be limited to 15% of the total aggregate in all mix types.

4.1.3 Supply of Blend Sand. After the Field Adjusted Mix Design has been developed (as outlined in Subsection 3.2.1) a supply of at least one day’s production of blend sand shall be maintained in stockpile at all times.

4.1.4 Blending Aggregates. Blending of aggregates from two or more sources will only be permitted for specified Petrographic Number (PN) of 135 and when the Petrographic Number for the aggregate from any of the sources does not exceed the specified Petrographic Number by more than 10%.

The minimum amount of blended coarse aggregate shall not be less than 10% of the stone fraction. The coarse aggregate shall be blended through the cold feed bins.

Sand from another source may be used without blending, provided the stone from which the sand is produced has a PN not more than 10% higher than the specified PN. The stone portion of the mix shall have a PN less than or equal to the specified PN.

4.1.5 Physical Requirements of Aggregates. The physical requirements of the aggregates shall be as shown in Table 4.4.2 and Table 4.4.3.

Table 4.4.2 - Physical Requirements of Aggregate[1]

Test Name	Standard[2]	Requirement
Los Angeles Abrasion, %	ASTM C 131	Max. 30
Soundness, %[3]	ASTM C 88[6]	Max. 15
Fractured[4] Particles, 2 Fractured Faces, % by Mass[8]	DOT&PW[7]	See Table 4.4.3
Petrographic Number[4]	DOT&PW[7]	See Table 4.4.3
Stripping Test, %	AASHTO T 283	Min. 0.73
Absorption, %[5]	ASTM C 127	Max. 1.75
Fine Aggregate Angularity, % [9]	AASHTO TP 33 (A)	Min. 45
Sand Equivalent, %	ASTM D 2419	Min 50
Flat and Elongated Particles (4:1)	ASTM D 4791	Max. 10

(1) Applies to all aggregates including those used for blending.
(2) Latest edition
(3) The soundness loss permitted will be 15% on fine aggregate other than for A, B-HF, C and C-HF. Soundness loss on fines for A, B-HF, C and C-HF, will be 10%.
(4) In the event of a disagreement regarding the Petrographic Number, Fractured Particles or Sand Equivalency percentage, the Contractor shall note their objections in writing to the Engineer such that the Engineer will notify the Manager of Highway Construction Services of impending referee testing. An analysis will then be done, as follows:
- The Manager of Highway Construction Services will arrange to have the stockpile sampled. If a Highway Construction Services Specialist is not available to sample, the Engineer will sample the stockpile. The Contractor will observe the sampling procedure.
- The sample will be taken to Highway Construction Services. All Consultants that are retained by the Department for asphalt concrete quality control or a minimum of two consultants, will be asked to send a representative to Highway Construction Services to test a representative portion of the sample.
- The sample will be split and each Technician will perform the Petrographic test or Fractured Particles Test. The results will be given to Executive Director District Operations, who will make the final decision with respect to the use of the aggregate, using the average of the test results as a guide.

(5) Fine aggregate shall have maximum absorption of 2.0 % when tested by ASTM C 128.
(6) Test to be performed using sodium sulphate.
(7) Standard test procedures are available from Highway Construction Services, if requested.
(8) A fractured particle consists of two (2) fractured faces which each consist of a minimum of 20% of the surface area of the particle. Particles with smooth faces and rounded edges, or with only small chips removed are not considered fractured.
(9) Applies to all fine aggregate except blend sand

Table 4.4.3 - Quality of Coarse Aggregate vs AADT

Type	AADT(1)	PN	Fractured Particles, %
A	N/A	135	95(2)
B-HF	N/A	135	95(2)
C-HF	N/A	135	95(2)
D-HF	N/A	135	95(2)
C	2500-4000	150(3)	70
C	1000-2499	150(3)	40
B	1000-2499	180(3)	40
C	Below 1000	180(3)	40
B	Below 1000	180(3)	40
D	N/A	N/A	N/A
E	N/A	**180**	40

(1) Average Annual Daily Traffic
(2) The coarse aggregate shall be made from a quarried source or contain 95% fracture particles. The fine aggregate for all mix types shall be produced from bedrock, or in the case of a natural deposit, from the aggregate held on the 10 000 sieve. A tolerance of 10% passing the 10 000 sieve, based on a washed sieve analysis, will be permitted.
(3) Blending of aggregates from two or more sources shall not be permitted for PN's of 150 or 180.

4.1.6 Gradation of Combined Aggregate. The gradation of the combined processed aggregate for the asphalt concrete shall conform to the values shown in Table 4.4.4 when tested by washed sieve analysis according to ASTM C 117, C 136 and D 546.

4.1.7 Stockpiling of Aggregates. Aggregates shall be stockpiled as herein described so as to limit segregation, intermingling and contamination. Where the location of aggregate manufacture is different from the location of asphalt concrete production, stockpiles at all locations shall comply. Only those aggregates placed in stockpiles approved by the Department shall be used. Stockpiles shall be formed on evenly graded and well drained areas. Stockpiling shall not commence until the site is approved by the Engineer considering the total area required based on the maximum height allowed and the minimum quantity to be stored in the stockpiles.

The aggregate for asphalt concrete shall be separated into a coarse fraction and a fine fraction and the two fractions shall be placed in separate stockpiles.

The coarse aggregate stockpile(s) shall contain a minimum of 80% retained on the 5000 sieve by washed sieve analysis.

The fine aggregate stockpile shall contain a minimum of 80% passing the 5000 sieve by washed sieve analysis.

Stockpiles shall be built in layers not exceeding l m in thickness for coarse aggregate nor 2 m in thickness for fine aggregate. Each layer shall be constructed over the entire area before the next layer is begun. The maximum height shall not exceed 4 m. Coning, end dumping or pushing aggregate over the edge of stockpiles will not be permitted. Aggregates, delivered in trucks or loaders, shall be uniformly spot dumped and the stockpile built as specified in the foregoing.

Stockpiles shall be separated either by bulkheads or distance to avoid intermingling of material in one stockpile with that in another stockpile. Placing of unacceptable aggregate on previously accepted aggregate shall be cause for

rejection of the entire stockpile. Payment will not be made for any aggregate left in stockpile.

Table 4.4.4 - Gradation of Combined Aggregates

Sieve Designation	Cumulative Percent Passing							
	Type A	Type B	Type B-HF	Type C	Type C-HF	Type D	D-HF	Type E
40 000	100							
28 000	95-100	100	100					
20 000	-	95-100	95-100	100	100			100
14 000	60-80	-	70-90	95-100	95-100	100	100	85-100
10 000	-	60-80	60-75	-	-	95-100	95-100	-
5 000	25-60	35-65	40-55	45-70	45-60	60-80	55-70	65-80
2 500	15-45	20-50	25-45	25- 55	25-55	35-65	25-55	50 65
315	3-18	3-20	3-20	5- 20	5-20	6- 25	5-20	18-30
80	1-7	2-8	3-6.5	2-9	3-6.5	2-10	2-9	5-15
Normal Usage	Base	Base/ Surface	Base/ Surface	Surface	Surface	Surface	Surface	Curbs/ Gutters Medians

4.1.8 Quantity of Aggregate in Stockpile During Mix Production. The quantity of aggregate in stockpile during periods of mix production shall be the minimum of 20 hours of production for both coarse and fine aggregate or the quantity required to complete the job.

4.2 PGAB, Supply and Inventory. The Contractor shall supply and transport all PGAB, used in the manufacture of asphalt concrete, in accordance with Division 4 Section 2.

The quantity of PGAB in the Contractor's storage tank(s) at the beginning and end of a job will be determined by the Engineer.

If there is PGAB in the Contractor's tank(s) at the beginning of the job that is not acceptable for use by the Department it shall be removed. If the tank is contaminated with hydrocarbon fuels or solvents, it shall be cleaned to remove all contaminants before PGAB to be used on the job is placed in the tank(s).

If there is PGAB that belongs to the Contractor in the tank(s) at the beginning of the job, and provided it meets Department's specifications, the Contractor may use it in the work.

4.3 Anti-Stripping Agents. The anti-stripping agents shall consist of one of the following:

- Hydrated Lime ($Ca(OH)_2$)
- Liquid Anti-Stripping Agent

4.3.1 Lime. The addition of lime by the Contractor shall be approved by the Department.

4.3.2 Liquid Anti-Stripping Additives. The products on the following list have been subjected to an internal review by the Department respecting formulation and the toxicology of ingredients and have been determined to meet Department criteria for use on paving projects. The acceptable liquid anti-stripping additives are as listed in Table 4.4.5.

Table 4.4.5 - Anti-Strip Additives

Supplier	Product
Akzo Nobel Chemicals	Redicote C 3082
Akzo Nobel Chemicals	Redicote 95-S
Meadwestvaco Corp.	Evotherm M1
Morton International	Pave Bond "T" Lite
Morton International	Pave Bond Lite
Travis Chemicals	Travcor 4501
ARR-MAZ Products	AD-here LOF 6500
Ultrapave	Ultracote (UP-5000) (1)
Zydex	Zycosoil (1)
Zydex	Zycotherm(1)

(1) Ultracote, Zycosoil and Zycotherm are non-amine based asphalt anit-strippping additives and are exempt from the restrictions outlined in NSTIR's Action Plan "Use of Amine-based Liquid Asphalt Anti-stripping Additives on NSTIR Paving Projects".

Inclusion on this list does not attest to efficacy of use with any specific aggregate or approval for use on any specific project. Testing for each project shall be required for this purpose. This list is subject to revision.

4.3.2.1 Information Sessions and Worker Training. At a pre-construction meeting the Contractor shall inform the Engineer of the supplier's name and product name of liquid anti-stripping additive that is to be used on the contract if one is required. At this time the Contractor and the Department will review the requirements for use of the liquid anti-stripping additive, including proper procedures, worker information, use of protective clothing and equipment, removal of sensitive workers, site supervision and contingency system.

The Contractor shall advise workers of the proper procedures to be followed when working with PGAB or asphalt concrete containing liquid anti-stripping additive.

The Contractor shall ensure that Carriers retained to haul the PGAB containing liquid anti-stripping additive have received training with respect to working with PGAB containing liquid anti-stripping additive.
The Department shall provide training with respect to working with PGAB or asphalt concrete containing liquid anti-stripping additive for its employees or representatives.

4.3.2.2 Mandatory Respiratory Protection. The Contractor shall provide at their expense Respiratory Protective Equipment for any of their staff that are directly exposed to the concentrated vapours of PGAB containing liquid anti-stripping additive (unless exhaust ventilation is provided) such as those who may be subjected to the plume from the PGAB storage tank. The Contractor shall ensure that these staff wear the Respiratory Protective Equipment. (The Department shall provide at its expense similar protective equipment for its employees or representatives and shall ensure that the protective equipment is worn.)

4.3.2.3 Voluntary Respiratory Protection. The Contractor shall provide upon the request of its employee, and at the Contractor's expense, Respiratory Protective Equipment for any of their employees who feel they are adversely affected (eye, nose, throat, lung irritation, nausea, etc.) by the odors of the asphalt concrete containing liquid anti-stripping additive. (The Department will provide at its expense and upon request similar protective equipment for its employees or representatives.)

4.3.2.4 Respiratory Protective Equipment Specifications. Respiratory Protective Equipment shall consist of a full face mask, to protect eyes as well as respiratory system, and shall be equipped with organic vapour cartridges and dust pre-filters. Cartridges shall be replaced whenever the smell of vapours is detected by the worker using the

respirator. Pre-filters shall be replaced when they become visibly dirty or when resistance to breathing becomes noticeable.

4.3.2.5 Relocation of Worker Sensitive to Liquid Anti-Stripping Additive When Wearing Respiratory Protective Equipment. The Contractor shall, at the request of a worker adversely affected by the vapours of PGAB containing liquid anti-stripping additive or the odours of asphalt concrete containing liquid anti-stripping additive (who cannot be adequately protected by wearing respiratory protective equipment) relocate the worker to work in an area where the worker is not affected.

If the Contractor recognizes that a worker adversely affected, the Contractor shall relocate that worker to work in an area where the worker is not affected.

The Department will, at the request of an employee adversely affected by the vapours of PGAB containing liquid anti-stripping additive or the odours of asphalt concrete containing liquid anti-stripping additive (who cannot be adequately protected by wearing respiratory protective equipment) relocate the employee to work in an area where the employee is not affected. Relocating a Department employee sensitive to anti-stripping vapours may result in minor delays to the paving operations.

If the Department recognizes that a worker is adversely affected, the Department will relocate that worker to work in an area where the worker is not affected.

4.3.2.6 Monitoring of Air Quality. The Department will, at its expense on some contracts, monitor the air quality at various locations of the paving operations. The Contractor shall cooperate with respect to this testing, by providing access to all aspects of the paving operation to the Department or its representative.

4.3.2.7 Contingency System. The Contractor shall have an employee on site who will be authorized (this employee shall be identified at the pre-construction meeting) to make decisions regarding any difficulties that may arise during the paving project.

5.0 CONSTRUCTION METHODS

5.1 Manufacturing Mix

5.1.1 Hot Mix Plants. All manufacturing shall be done with either a batch, drum or continuous mixing plant. All plants shall conform to the requirements of ASTM D995 and as specified herein. The Contractor shall ensure that the hot mix plant is operating properly so that unburned burner fuel does not contaminate the asphalt concrete.

5.1.1.1 Cold Bins. Cold bins for all mixes shall be divided into not less than three compartments. Each compartment shall be equipped with its own gate control to enable accurate proportioning of each aggregate. Dimensions of each compartment shall be such that free flow of aggregate can be attained at all times. Contamination of the aggregate designated to be placed in each compartment before or after placement in the bins shall be cause for rejection of the material.

If the cold bins are being fed with a front end loader the Contractor shall ensure that there is no spillage from the loader bucket such that aggregate of one size is spilled into a bin containing aggregate of a different size.

5.1.1.2 Feed for Dryer. The plant shall be provided with mechanical means for uniformly and accurately feeding aggregate into the dryer so that a consistent mixture and temperature can be achieved.

5.1.1.3 Dust Collector. The plant shall be operated so that emissions are in accordance with the 'Asphalt Paving Plant Regulations'.

5.1.1.4 PGAB Storage Tanks. Storage tanks shall be insulated and equipped with heaters to maintain the PGAB at the spraying temperature given in Division 4 Section. Each tank shall be equipped with thermometric equipment that indicates within 5°C, the actual temperature of the PGAB. Safe and easy access shall be provided to the hatch to facilitate sampling and measuring the level of PGAB in the tank(s). The Contractor shall be responsible to supply an acceptable device for measuring the level of PGAB and an accurate calibration chart for each tank. The Contractor shall ensure that contamination of the mix does not occur through the introduction of heating oil. The use of hydrocarbon fuels or solvents to flush hoses and/or pumps shall not be permitted.

5.1.1.5 Sampling Stand. The Contractor shall provide, install and maintain a stand for the purpose of sampling asphalt concrete from loaded trucks. It shall be of solid construction, safe, firmly anchored, of a height to enable easy acquisition of samples from the haul vehicles. The stand shall have a platform of minimum dimensions area of 3 m in length and 1 m in width, be equipped with stairs and be completely enclosed with guard and hand rails and it shall be placed in a suitable location.

5.1.1.6 Production Rate. Plants shall be operated at a rate which allows them to produce high quality mix, consistent with the Manufacturers recommendations. They shall also be operated at a rate to provide continuous operation compatible with the rate of placing the mix.

5.1.2 Batch and Continuous Mix Plants. In addition to the general requirements in Subsection 5.1, the following shall apply:

5.1.2.1 Aggregate Preparation (See also Sections 6.2.1, 6.2.2 and 6.2.3). Aggregate shall be fed to the cold bins from approved stockpiles and not directly from the crusher. Feed from the cold bins to the dryer shall be in proper proportions and at a rate to permit uniform temperature control. The aggregate shall be dried and transported to the pugmill at a temperature between 135°C and 160°C. The actual temperature shall be determined based on the penetration grade of the PGAB, the ambient temperature and workability, but shall be as low as possible to permit proper mixing, placing, compacting and finishing.

Immediately after heating, the aggregate shall be screened into bins with separation on the 5000 sieve and such other coarse sieve sizes as the number of bins permit.

The quantity of aggregate in stockpile at the asphalt plant site during periods of mix production shall be at least equal to the amount required for 20 hours of mix production or the quantity required to complete the job.

5.1.2.2 Proportioning and Mixing. Each size of aggregate and the PGAB shall be measured separately and accurately in the proportions in which they are to be mixed. The depth of material in the pugmill shall be set so that there are no dead areas and the asphalt concrete is uniformly mixed.

In batch plants, dry mixing shall be for 15 seconds and after even distribution of the PGAB, a minimum of 30 seconds wet mixing, or according to the manufacturers specification.

Continuous mix plants shall have a minimum mixing cycle as calculated by the formula in ASTM D 995, but no less than 45 seconds.

Provision shall be made to waste all of the dust or to uniformly return any or all of the dust as required to meet the specifications.

5.1.3 Drum Mix Plants. In addition to information in Section 5.1.1, the following shall apply:

5.1.3.1 Aggregate Preparation (See also Subsection 4.1.7). Continuous testing of the aggregate produced during the crushing operations shall be performed and upon completion of crushing of the initial 1500 t of fine aggregate and 1500 t of coarse aggregate, a mean value for percent passing the 5000 sieve for each shall be determined. The mean values are referred to as design values. Aggregates crushed henceforth must have gradation within 5% of the design values and also comply with the 80% requirement in Subsection 4.1.7.

5.1.3.2 Cold Feed System. Each cold feed bin shall be adjusted and calibrated to the manufacturer's specification; have partitions adequate to prevent the intermingling of aggregate; feed only one aggregate size through a fully adjustable gate; and have the belt conveyor controlled remotely by variable speed motors that will permit precise speed adjustment.

A belt scale shall be provided on the cold feed conveyor and shall be calibrated to the manufacturer's tolerance at the start of each project, or whenever the weighing conveyor is moved or when deemed necessary by the Engineer. The weighing conveyor shall be equipped with a self-cleaning system to eliminate weighing errors. The belt conveyor shall be set at the tension recommended by the manufacturer.

A positive interlocked automatic shutoff shall be provided so that the plant will shut down automatically after a 15 second delay or if there is a disruption in the flow of aggregate.

A vibratory scalping screen of adequate size and capacity shall be provided to remove oversize material from the

combined cold feed belt. Provision shall be made to divert the aggregate passing the vibrating screen to allow sampling by the Department or it representative. Monitoring probes shall be installed to monitor the moisture in the aggregate.

5.1.3.3 PGAB Distribution. The PGAB delivery system shall be equipped with a flow switch which shall automatically stop the plant if any interruption occurs in the flow of PGAB. A temperature correction device shall be used to compensate for the specific gravity of the PGAB. The system shall be equipped with a bypass to permit weighing and calibration.

5.1.3.4 Calibration. The Contractor shall have competent personnel available to calibrate and maintain all electronic, electrical and mechanical controls.

The Contractor shall maintain at the plant a copy of the manufacturer's manual which contains the method of calibrating which shall be used to perform the initial calibration after assembly and prior to production. The calibration of the plant shall be carried out under the supervision of the Department or its Representative.

Generally initial calibration shall consist of cold feed and PGAB metering pump calibration. Each cold bin shall be calibrated separately by diverting the flow from the bin into a properly tared truck. The PGAB metering pump shall be calibrated by diverting the flow into a tared tank truck.

Graphs shall be prepared for each bin showing the flow in tonnes per hour (tph) (moisture corrected) plotted against the plant readout for the variable speed motors. A graph shall also be prepared showing the tph of PGAB plotted against the plant readout for the pump.

When an aggregate source is changed, the cold feed system shall be calibrated. At the start of each day the assembly shall be stabilized. A known mass shall be placed on the weighing conveyor to verify the plant readout. During production, the moisture content of each aggregate in the cold feed bins shall be determined before noon and also after noon. Changes will be made in the plant settings due to changes in moisture. Adjustments shall be made until all plant settings agree with design tph and the tph from the calibration graphs.

5.1.3.5 Production. The Contractor shall supply to the Project Engineer at the project pre-job meeting, the asphalt plant manufacturer’s specification for each individual plant;

- The specified rate of production in tonnes per hour versus aggregate moisture content, the Contractor shall adhere to the manufacturer’s production rates
- The specified location of the PGAB delivery pipe within the drum of the asphalt drum mix plant
- Production will not commence until the location of the PGAB delivery pipe is verified by visual inspection at the start of the paving season or as deemed necessary by the Department
- Deviations from the manufacturer’s specification will not be permitted

The aggregate shall be sufficiently dried as evidenced by the lack of noticeable steaming and bubbling of the asphalt concrete, and by the absence of any visible free water seepage from the storage silo, or the truck bodies. If any of these conditions are evident it shall be cause for rejection of the asphalt concrete.

A system for diverting unacceptable material shall be provided between the drum and the storage silo or surge bin. The moisture content of the asphalt concrete at discharge shall be determined daily and shall not exceed 0.5%. The temperature of asphalt concrete shall be automatically recorded.

5.1.3.6 Storage. Drum mix plants shall be equipped with either a silo or a surge bin, capable of delivering a homogenous, non-segregated and non-contaminated asphalt concrete into the trucks. Silos shall be maintained at least half full and be equipped at the top with a tripping hopper. The silo shall be equipped with a device to indicate if the silo is half full.

The tripping hopper shall be coordinated with plant production and shall close before complete discharge to prevent any free fall of asphalt concrete into the silo. Storage in the silo up to 20 hours shall be permitted provided that the penetration of the PGAB recovered from the stored asphalt concrete is equal to or greater than the penetration after the thin film oven test of the original PGAB before mixing and also the temperature remains such that the asphalt concrete does not arrive at the paver below 125°C.

5.2 Loading, Transporting, Unloading. Asphalt concrete shall be discharged from the plant into truck bodies using a minimum of three drops to fill the body. The truck shall be repositioned between drops such that the first drop is toward the front of the box, the second drop is toward the rear of the box, and the third drop is in the middle.

At no time shall the asphalt concrete be allowed to trickle through the surge bin or silo into the truck body. Asphalt concrete shall be transported from the paving plant to the work site in vehicles with smooth metal bodies, free from leaks and previously cleaned of all foreign materials. Vehicles shall be equipped with tarpaulins of water repellent material with a maximum mesh size of 0.5 mm when stretched, a minimum melting point of 200ºC and of sufficient size to completely cover truck bodies from edge of box to edge of box and overlap the tailgate. Tarps shall be in good condition and shall have no holes or tears. The tarps shall be securely tied down so there is no visible opening between the truck box and tarp. Vehicles shall also be equipped with wind deflectors at the front of the truck box. If it is raining or if the temperature of the asphalt concrete drops more than 10ºC between the time of leaving the plant and placing on the road, tarpaulins shall be used. Tarpaulins shall be used at any other time at the Engineer's request.

The use of Hydrocarbon fuels or solvents to lubricate the truck bodies or to clean tools or equipment, will not be permitted. A biodegradable release agent shall be supplied by the Contractor to clean or lubricate tools, equipment and truck bodies.

Trucks will stop slightly ahead of the paver and the paver will move ahead and smoothly pick up the truck. To reduce segregation, prior to backing into the spreader the truck body shall be partially elevated before the tail gate is tripped to promote a mass of material deposited in the hopper.

It is the joint responsibility of the paving Contractor and trucker to load the proper amount of asphalt concrete hot mix into each truck. Any excess amount that shall be removed is the joint responsibility of the paving Contractor and the trucker. The removal of the excess material shall be accomplished in a manner that is consistent with the Occupational Health and Safety Act and also shall not impact on the integrity, or promote segregation, of the hot mix material.

5.3 Placing. Asphalt concrete shall be placed upon a prepared surface which is free from standing water and cleaned of all loose or foreign material.

On repaving projects, before placing of new pavement, the existing pavement shall be tacked as per Division 4, Section 1, Emulsified Asphalt. When the pavement has been left over the Winter, it shall be cleaned and tacked before new pavement is placed.

New pavement may be applied directly over a freshly placed mat without applying tack coat, such as when multiple lifts are being placed within the same construction season.

Placement shall not take place during rain, or when the surface is frozen, nor when the ambient temperature is below 5°C, unless otherwise directed by the Engineer.

The placing of asphalt concrete shall be at a constant and even rate of speed.

The spread rate for each lift shall not vary more than 15 kg/m^2 from that specified by the Engineer. The maximum spread rate allowed will be 135 kg/m^2 unless otherwise approved by the Engineer.

5.3.1 Mechanical Pavers & Their Operation. Unless otherwise permitted by the Engineer, the asphalt concrete shall be spread by a mechanical self-powered paver in good working condition capable of achieving the specified grade, line and crown.

Pavers shall be equipped with hoppers and reversing distributing screws to place the asphalt concrete evenly in front of adjustable screeds. The asphalt concrete shall be dumped in the centre of the hoppers such that no spilling occurs on the road surface. Any asphalt concrete spilled accidentally shall be shovelled from in front of the spreader and wasted or placed in the hopper. The hopper shall not be emptied to less than 25% of capacity while moving forward except when the spreading operation is being suspended (i.e. as the end of the day). Wings of the paver shall only be dumped when the asphalt concrete has built up so that a truck cannot be unloaded. Any cold or segregated material must be shovelled out and wasted.

Any segregated asphalt concrete in the hopper shall be shovelled out between truck loads and wasted. The distributing screws shall always be kept between 1/3 and 2/3 covered. Pavers shall employ equalizing runners, straightedge runners, even-arms and/or other compensating devices to adjust the grade and confine the edges of the asphalt concrete to the true lines without the use of stationary side forms. They shall be capable of spreading the asphalt concrete without segregation, to a thickness between 20 mm and 100 mm and in instances where a single paver is operating, that paver must be capable of continuous width adjustment. When paving in echelon one of the

pavers must be capable of continuous width adjustment. Where a single paver is operating on a surface course, the width of paver shall be such that a longitudinal joint is not formed within a travel lane. The joints in the lower courses may be in the travelled lane but not directly in the wheel path. Longitudinal joints between courses shall be offset by a minimum of 300 mm.

Pavers shall be equipped with adjustable vibrating screeds which are capable of being heated and produce a minimum vibrating frequency of 3000 vibrations per minute or as specified by the manufacturer. They shall be equipped with a maintained strike-off bar or tamper. The tamper shall knead the coarse particles to prevent tearing or dragging of the mat. The vibrating screed, including extensions, will provide initial compaction and must form a consistent texture and grade and shall operate across the entire width of the mat.

Immediately after the asphalt concrete is spread and before rolling operations begin, the surface shall be inspected and any irregularities repaired and adjustments made to the screed. Irregularities in alignment and grade along the outside edge shall also be corrected before the edge is rolled.

Special attention shall be given to the straight edging of each lift following initial rolling.

Approved automatic screed controls shall be used to regulate longitudinal grade and transverse slope when spreading Type B, Type B-HF, Type C, Type C-HF or Type D-HF on Freeways and/or Arterials.

Automatic screed controls shall be used on Collector or Local roadways at the mutual agreement of the Engineer and Contractor or if specified in the Special Provisions.

All pavers must be equipped with automatic joint matchers which shall be used to match to the grade of a previously placed adjacent mat.

Automatic screed controls for the control of longitudinal and transverse slope and joint matching shall be as recommended or supplied by the manufacturer of the paver. When use of the longitudinal automatic screed control is specified the first lift shall be controlled as to grade by an approved 9 m ski or floating beam. For all subsequent lifts the paver shall match the previous lift by using the shoe designed for that purpose.

5.3.1.1 Material Transfer Device. Where a Material Transfer Vehicle has been opted for use by the Contractor, the Contractor will be paid an additional $1.50 per tonne for all non-segregated, uniformly textured, smooth asphalt concrete applied using an approved Material Transfer Vehicle (MTV). The MTV is defined as a self-propelled transfer unit and (paver) insert hopper. The MTV must transfer hot asphalt concrete from an unloading truck and re-mix the material prior to lay down, without direct contact with the paver.

Areas subjected to repairs as a result of segregation, non-uniform texture or roughness will not be eligible for the premium. Repairs, if required, shall extend the full width of the lane and the full depth of the lift in which the repair work is performed.

Material Transfer Vehicles which are not approved by the Department will not be eligible for the premium.

MTVs proposed for use by the Contractor must be evaluated and approved by the Department or its representative prior to becoming eligible for the $1.50 per tonne premium. Contractors wishing to have particular MTV units evaluated shall make written request to the Department's Highway Construction Services Division. Contractors shall work cooperatively with the Department's evaluator(s) in establishing mutually agreed upon test conditions and variables. Once the Department has been satisfied that a proper evaluation has been completed, Contractors shall be notified, in writing regarding the eligibility of the particular MTV for the premium.

5.3.2 Spreading Alternatives. In narrow base widening, deep or irregular sections, intersections, turnouts, or driveways, where it is impractical to use mechanical pavers to spread and finish the base, levelling or surface course, the Contractor may use other approved spreading equipment (graders etc.) or hand methods as directed by the Engineer. When the asphalt concrete is to be spread by hand, it shall be dumped and then spread with lutes or rakes. The Contractor will not be permitted to use shovels to spread the asphalt concrete by broadcasting it over the surface. Any part of the asphalt concrete that has formed into lumps and does not break down easily shall be discarded. The rakers will not be permitted to stand on the hot asphalt concrete, except where necessary to correct errors in the first raking. The hand placement and raking shall be performed in such a manner that a minimum amount of patching will be required.

5.3.3 Joint Construction. All joints shall be well bonded to form a continuous seal.

5.3.3.1 Transverse Joints. Transverse joints shall be formed by butt joints. When forming butt joints, the edge of the previously placed asphalt concrete shall be cut back to its full depth so as to expose a fresh surface after which it shall be coated with hot PGAB or tack coat or heated before fresh asphalt concrete is placed in contact with it. Heat shall be applied to the joint using a method approved by the Engineer with care taken not to overheat the existing asphalt concrete. The freshly placed asphalt concrete shall be raked to the proper depth and grade and then the transverse joints shall be rolled transversely (perpendicular to the travel lanes) and the compacted joint shall be inspected with a 3 m straightedge. If there is more than a 6 mm depression, the joint shall be reconstructed.

5.3.3.2 Keyed Joints. When overlaying existing asphalt concrete pavement, keyed joints (see Drawing S-2009-013) shall be constructed at both ends of the Project repaved area, at all intersecting roads, ramps and at all bridge decks in the repaved area, to avoid a feather joint. Keys will only be required between the final lift of pavement and the existing pavement, unless otherwise directed by the Engineer.

The existing asphalt concrete pavement shall be removed to expose a vertical surface of a depth equal to the thickness of the final lift against which new asphalt concrete may be placed. The minimum slope measured parallel to the centre line of the milled area shall be 200 horizontal to 1 vertical (200H:1V). The angle that the joint makes with the centerline shall not exceed forty five (45º) degrees or as otherwise directed by the Engineer.

When existing pavement has been removed in advance of paving the joint area, the Contractor shall construct a smooth taper at the joint area to a slope of at least 50 horizontal to 1 vertical (50H:1V). The taper may be placed on tar paper and shall be removed just prior to paving the keyed area or as directed by the Engineer. The transverse joint shall be straight and have a vertical face when the taper is removed. Asphalt concrete used to construct tapers shall be paid at the contract unit price per tonne for the mix type specified.

The associated cost of providing all keys shall be included in the price per tonne of asphalt concrete.

The paver shall not move more than 20 m from any transverse joint until that joint has been rolled and checked with a straight edge. If the joint is not satisfactory it shall be immediately corrected before the paver may proceed.

5.3.3.3 Longitudinal Joints

5.3.3.3.1 Paving in Echelon

5.3.3.3.1.1 Paving / New Construction. Pavers shall be used in echelon to lay the mat full width. The pavers shall follow one behind the other so closely that cooling of the longitudinal joints between the mats is not permitted.

Adjacent mats must be completed to provide for exposed joint edges of maximum length of 100 m at the end of each day.

5.3.3.3.1.2 Pulverization / Repaving Projects. Pavers may be used in echelon to lay the surface full width, when practical, when traffic can be diverted and when production of the mixture can be maintained. The pavers shall follow one behind the other so closely that cooling of the longitudinal joints between the mats is not permitted.

Adjacent mats must be completed to provide for exposed joint edges of maximum length of 100 m at the end of each day.

5.3.3.3.2 Conventional Paving

5.3.3.3.2.1 Construction When not Paving in Echelon. Prior to placing the adjacent mat, the exposed edge of each longitudinal joint must be coated with emulsified asphalt (tack coat).

The material being placed in the abutting lanes shall be tightly crowded against the vertical face of the previously placed lane. The paver shall be positioned so that in spreading, the material overlaps the lane previously placed by 25 to 50 mm and should be left sufficiently high to allow for compaction. The width and depth of the overlapped material shall be kept uniform at all times.

The longitudinal joints may be constructed such that the freshly placed asphalt concrete may be humped by the back of the rake or lute which shall permit the roller to force and compact the asphalt concrete into the previously placed lift. During construction of the longitudinal joint, the rakers will not rake the coarse particles over the freshly placed asphalt concrete. Any surplus of coarse particles shall be wasted.

When constructing a joint near any adjoining edge that the spreader cannot reach, any spaces left open shall be filled by hand with asphalt concrete. This may be humped with the back of a rake or lute to a proper height as to receive maximum compaction.

Longitudinal joints in the top lift shall not be constructed within a travel lane except when paving in echelon or when paving tapers. Lower mats may have joints in the lane but not in the wheel path. Joints in succeeding lifts shall be offset a minimum of 150 mm to 300 mm for all 100 Series Highways. Joint offset for all other classes of road shall be a minimum of 150 mm.

Adjacent mats must be completed to provide for exposed joint edges of maximum length of 100 m at the end of each day.

In no case, shall a section of longitudinal joint be left exposed for greater than three (3) hours, that is, the adjacent mat must be placed along any section of previously placed mat within three (3) hours. The exception to the foregoing is the short (100 m or less) strip that may be exposed at the end of the day.

5.3.4 Placing Rate. Placing shall proceed in a continuous and steady manner. The paver speed shall therefore be regulated to the rate of plant production, however, placing must be at such a rate to provide for a satisfactory finish and specified compaction.

Ordinarily, there shall not be more than five (5) trucks waiting to unload ahead of the spreader.

5.4 Compacting and Finishing. The minimum density acceptable shall be 92.5% of the Theoretical Maximum Relative Density determined according to ASTM D 3203. The percent compaction shall be determined by comparing the core densities with the theoretical maximum relative density.

5.4.1 Rolling Operations - General. Compaction of the asphalt concrete shall be with any combination of rollers that can achieve the specified smoothness and density except that when compacting Type B-HF or Type C-HF, a pneumatic tired roller shall be used in the train. Also, there shall be at least one pneumatic tired roller in the train when it is determined specified compaction cannot be obtained or surface texture and smoothness acquired.

The Contractor shall demonstrate a rolling pattern for achieving compaction at the start of paving operations and the degree of compaction will be verified by the Department. This rolling pattern shall be maintained unless a change is approved by the Engineer.

When ending a pass, the roller shall turn to one side to avoid leaving a depression perpendicular to the centerline.

To avoid depressions in the asphalt concrete, rollers shall not be permitted to park on the hot mat.

All pneumatic tired rollers shall be skirted when air temperature is 10°C or lower or at the Engineer's request. When thin lifts are being placed, particularly if the air temperature is 10°C or lower, the plant production shall be reduced to allow for specified compaction procedures.

5.4.1.1 Rollers - General. Rollers shall be in good condition, capable of reversing direction without backlash and they shall be operated by competent and trained operators. The speed of steel wheeled rollers and pneumatic rollers shall not exceed 5 km/h and 8 km/h, respectively. The speed shall be slow enough to avoid displacement of the asphalt concrete. Any displacement occurring as a result of reversing the direction of the roller, or from any other cause shall be corrected. Rolling shall proceed continuously until all roller marks are removed and the specified compaction is achieved. Water or a biodegradable release agent shall be used on the roller wheels or tires to prevent adhesion of asphalt concrete. Hydrocarbon fuels or solvents shall not be permitted. Pneumatic tired rollers shall have a minimum mass of 3.5 t/m of width of tread. Vibratory rollers shall be capable of operating at a frequency of 2000 impacts per minute. The Department may use a tachometer to inspect the vibration frequency of each roller.

5.4.1.2 Number of Rollers. The minimum number of rollers to be supplied by the Contractor shall be as shown below unless the Contractor is able to achieve the required density, surface texture, and smoothness with fewer rollers.

Plant Output, t/h	Rollers (minimum)
80	2
120	3
180	4
240	5
300	6

5.4.1.3 Breakdown Rolling. Breakdown rolling shall begin when the asphalt concrete can withstand the mass of the roller without excessive displacement. Delays in rolling will not be tolerated. Rolling shall start longitudinally at the lower side or unsupported edge and proceed towards the centre of the mat, overlapping on each successive pass, by at least one half of the width of the drum. Alternate passes shall be of varying lengths. At unsupported edges, the roller shall cover the edge, but shall not overhang the edge by more than 150 mm.

5.4.1.4 Secondary Rolling. Secondary rolling shall follow the breakdown rolling as closely as possible while the asphalt concrete is still viscous enough to achieve the specified compaction.

5.4.1.5 Final Rolling. Final rolling shall be performed while the asphalt concrete is still viscous enough to permit the removal of roller marks.

5.4.1.6 Vibratory Rolling. Vibratory rollers shall be operated at a travel speed and vibration frequency to produce a minimum of 25 impacts per metre. Vibratory rollers will be used at the low amplitude setting, unless compaction cannot be achieved in which case the high amplitude setting will be used provided it does not cause ripples in the surface. Vibratory rollers shall be equipped with a device to provide for automatic shut off of vibration before the roller comes to a stop.

Vibratory compaction shall not be used on bridge decks.
5.4.1.7 Compaction Near Structures. Along curbs, headers, manholes and other structures not accessible to the roller, compaction must be obtained by employing suitable tampers or compactors.

5.4.2 Surface Finish. The surface, after final rolling shall be smooth and true to the established crown and grade.

All defective areas shall immediately be repaired by removing the asphalt concrete and replacing it with the same type of hot mix asphalt concrete used in that particular lift as per the specifications.

The surface shall be free from roller marks or any depressions exceeding 6 mm when measured with a 3 m straight edge held parallel to the centerline.

The surface shall have a cross slope of 20 mm/m to 35 mm/m as specified by the Engineer (in areas of normal crown).

5.5 Illumination. Asphalt concrete shall be transported, spread and compacted during daylight hours unless artificial light satisfactory to the Engineer is provided.

5.6 Temperature of Asphalt Concrete. Asphalt concrete exceeding a temperature of 165°C at any point of the operation shall be cause for rejection.

5.7 Co-ordination. All Aspects of the operation shall be co-ordinated such that production, transportation, placing and compaction shall be in a steady and continuous manner.

5.8 Segregation, Damage, Contamination. Segregation, damage or contamination of the asphalt concrete shall not be permitted whether it occurs in the stockpiles, mixing drum, conveyors, silos, surge bins, discharge chute, trucks or spreader or any other equipment. Segregated material shall be removed immediately as soon as it becomes apparent at any stage of the operation. Areas of segregated, damaged or contaminated material shall be removed to the full depth of the lift and repaired, to the satisfaction of the Engineer, at the Contractor's expense.

Equipment shall not be refuelled on the new asphalt concrete.

6.0 QUALITY CONTROL / QUALITY ASSURANCE

6.1 Inspection. The Department will have a representative at the site of aggregate production, at the asphalt plant site and on the road. The Contractor is responsible to provide free and safe access to the site(s) to permit the Department’s representative to carry out required duties.

The Contractor shall supply an inspection facility at the aggregate production site for the Department's representative at the Contractor's expense. The contractor shall provide a location for this facility that shall be close to the production site which allows a clear view of the operation and shall be in an environmentally acceptable area. At the aggregate production site, a reservoir of 100 L. of water suitable for performing tests shall be supplied.

6.1.1 Inspection Quarters - Asphalt Plant. The Department's Quality Control Firm will supply an inspection facility at the asphalt plant site. The contractor shall provide a location for this facility that shall be close to the plant which allows a clear view of the operation and shall be in an environmentally acceptable area. At the asphalt plant site an electrical connection will be supplied.

6.1.2 Inspection Quarters - Aggregate Production Site. Properly equipped aggregate inspection quarters shall be in place prior to the production of any aggregate. Inspection quarters shall conform to the following:

- Outside dimension 2 m x 2 m minimum
- Electrical service capable of supporting electronic testing equipment, air conditioning unit, heaters, etc.
- One door
- One window
- One bench
- One chair
- Supply of water for testing purposes

6.2 Sampling and Testing of Aggregate

6.2.1 Minimum Production Prior to Sampling. The Department will sample and test the proposed sources according to ASTM D 75 after 1000 t of aggregate have been stockpiled (500 t of coarse and 500 t of fine) ASTM C 136 and ASTM D 546.

6.2.2 Testing During Production. In pits where aggregate is being produced during construction, the aggregate shall be continuously sampled and tested according to ASTM D 75, ASTM C 136 and ASTM D 546. The Contractor shall inform the Engineer when crushing will commence. The Engineer shall contact the Department's Quality Control representative to arrange for testing.

6.2.3 Testing Stockpiled Aggregate. In high volume operations such as in a quarry where at least 3000 t of stockpile already exist, the aggregate in the stockpile shall be sampled and tested as per ASTM D 75, C 136 and D 546.

6.2.4 Aggregate Sampling for Stripping Test. Sampling of aggregates for the stripping test shall be as outlined in Subsections 6.2.1, 6.2.2 and 6.2.3.

6.3 Sampling PGAB. All QA samples shall be a minimum size of one litre and shall be taken from the Contractor's storage tank in accordance with ASTM D 140 by the Contractor. An additional set-aside sample shall be taken by the Contractor in the event an appeal test is required. The random number information pertaining to the hot mix tonnage at which the PGAB is required to be sampled shall be supplied by the Department.

The Department will verify the sampling, package and transport all samples (including set-aside samples) for QA testing.

6.4 Dispute Resolution for Segregation. Asphalt concrete shall be placed in accordance with the contract specifications and shall be free from segregation. Segregated areas shall be removed by cold milling the full width of the lane and full depth of the lift in which the work is being performed. The asphalt concrete mix used to replace the segregated material shall be the same mix type and thickness as that removed. All costs associated with this work shall be borne by the Contractor.

The Department has assigned designated technical personnel who will be contacted by the Engineer in the event of a dispute between the Engineer and the Contractor with respect to identification and removal of segregated areas.

One or more of the designated personnel will review the areas in question with the Engineer and Contractor's representative within 48 hours of notification by the Engineer. The decision of the Department's designated personnel with respect to the required action shall be final.

7.0 METHOD OF MEASUREMENT

The Contractor shall, at their expense, provide, install and maintain such approved scales and all suitable facilities as may be required to enable the Engineer to determine accurately the weight of asphalt concrete loaded into each truck.

8.0 BASIS OF PAYMENT

8.1 General. Asphalt concrete will be paid for at the contract unit price per tonne for the Asphalt Concrete (including tapers) actually incorporated and accepted in the work which price shall be full compensation for furnishing and transporting of all materials (except the supply of PGAB and tack coat), heating, handling, preparing the surface, mixing, placing and rolling of all materials, the supplying of all equipment, plant, labour and incidentals necessary to complete the work.

The unit price per tonne will be subject to adjustments if specified in the Special Provisions (example smoothness). Aggregate in stockpile will be paid for under the conditions and at the rate indicated in the Special Provisions.

8.2 Hauling of Blend Sand. The hauling of blend sand will be paid for if the blend sand is required when the design procedure contained in Subsection 3.2 has been followed. The amount of blend sand eligible for haul payment shall be the actual percentage of blend sand used on a daily basis, or up to 10%. Haul rates to be paid shall be TIR rates, up to a maximum haul distance of 75 kms. Documentation showing the actual haul rates and distances shall be provided

to the Engineer. The Department will pay the TIR rate or the actual rate paid by the Contractor, whichever is less.

9.0 WARRANTY

SECTION 5 - LIQUID ASPHALT PRIMER

1.0 DESCRIPTION

This item shall include the supply, transportation and application of all primer used on the contract.

2.0 REFERENCES

All reference standards shall be current issue or latest revision at the first date of tender advertisement. This specification refers to the following standards, specifications or publications:

- ASTM D 5, Test Method for Penetration of Bituminous Materials
- ASTM D 113, Test Method for Ductility of Bituminous Materials
- ASTM D 140, Practice for Sampling Bituminous Materials
- ASTM D 402, Test Method for Distillation of Cut-Back Asphaltic Products
- ASTM D 2042, Test Method for Solubility of Asphalt Materials in Trichloroethylene
- ASTM D 2170, Test Method for Kinematic Viscosity of Asphalts
- Division 4 Section 1, Emulsified Asphalt

3.0 SUBMISSIONS AND DESIGN REQUIREMENTS

3.1 Notice of Supply. Bidders shall nominate their source of primer and provide Statement of Supplier's price for primer as a supplement to the tender. On the form "Statement of Asphalt Cement, Liquid Asphalt - Primer and Emulsified Asphalt -Tack", Bidders shall:

- Submit with their tender a statement as to the source of primer. The Bidder shall only nominate one source of supply of primer.
- Indicate the Supplier's Posted Rack Price for primer FOB refinery (excluding taxes). For confirmation, the Bidder shall attach the written price quotation from the Supplier, which price shall be effective at time of award of contract and shall remain in effect until the end of the current calendar year.

No tender will be considered that does not include the above information.

3.2 Contracts Completed in Calendar Year. In the event that the Contractor wishes to change the source of supply during the progress of the contract, the Contractor shall apply for approval in writing, to the District Director. Approval in writing must be given by the District Director before the source of supply is changed.

The Contractor will not be compensated for any increase in cost of primer in the calendar year in which the primer work was initially intended to be done.

3.3 Contracts Carried Over to the Next Calendar Year. In the event the Supplier's Posted Rack Price increases or decreases subsequent to the end of the calendar year in which the primer work was initially scheduled and one of the following conditions is satisfied, then a price increase or decrease will be considered:

- In the opinion of the Department, a delay caused by another Contractor working on the contract site adversely affects the start up date of this Contract resulting in the completion of priming being delayed until the following year; or
- In the opinion of the Department, the lateness in tender call makes it unreasonable for the Contractor to finish priming that year. This will be noted in the Special Provisions of the contract; or
- In the opinion of the Department, for reason(s) beyond the control of the Contractor, the priming could not be completed before the end of the calendar year in which the priming was initially intended to be completed.

If the request for a price increase or decrease is approved by the District Director the Contractor will be assessed an increase or decrease for an amount equal to the actual dollar difference between the Supplier's original Posted Rack Price quotation and the Supplier's new Posted Rack Price. In all cases the Supplier's Posted Rack Price quotation for the price of primer for the next calendar year shall be submitted to the Engineer before the Contractor will be paid for any primer used that year. Any claim for a price difference by the Contractor shall be supported by the Supplier's Posted Rack Price.

4.0 MATERIALS

The liquid asphalt shall conform to the requirements listed in the following Table 4.5.1.

Table 4.5.1 - Primer Requirements

Requirements	Min	Max	ASTM
Kinematic Viscosity @ 60°C, mm ^{2}/s	20	35	D 2170
Distillate (% of total distillate to 360°C) to 190°C to 225°C to 260°C to 315°C	 20 40 70 85	 85 -- -- --	D 402
Residue to 360°C, volume % by difference	50	--	--
Residue Penetration @ 25°C, 100 g, 5s, 0.1 mm Ductility @ 25°C 5 cm/min, cm Solubility, % by mass	80 100 99.5	200 -- --	D 5 D 113 D 2042

5.0 CONSTRUCTION METHODS

5.1 General. When spraying primer, the Contractor shall cover concrete walks, curbs and walls adjacent to the highway with paper or other satisfactory covering and shall remove any primer which adheres to this concrete. No additional compensation will be allowed to the Contractor for this work.

5.2 Application Method. The Contractor shall place the primer at a rate of not less than 1000 ml/m^2 at a temperature of not less than 30°C nor more than 45°C. Primer shall not be applied in wet conditions, at an ambient air temperature lower than 7°C, or under other adverse conditions based on the approval of the Engineer. The primer shall be allowed to penetrate for such time as the Engineer directs. If possible, traffic shall be diverted around freshly primed surfaces. Asphalt concrete shall not be placed upon a primed surface for a minimum of 48 hours after the application, or as directed by the Engineer. Primed surfaces shall be rolled with steel wheeled rollers, weighing not less than 7 t. Rolling shall take place within 4 hours of application of primer, unless otherwise specified by the Engineer. If surface defects develop in the primer prior to asphalt concrete placement, the Contractor shall repair such defects as directed and at their own cost.

5.3 Application Equipment. All applications of primer shall be made by means of an approved distributor conforming to that specified in Division 4 Section 1 of these specifications. Primer shall be sprayed in a uniform manner and rate as directed and over a width, if required, of not less than 5 m. The forward speed of the distributor shall not exceed 100 m/min. The application of primer shall terminate at the same station for both lanes at the end of each day.

5.4 Storage Tankers and Tanks. Tankers used to transport primer or tanks used for temporary storage shall meet the following requirements:

- Be free from hydrocarbon fuels or solvents, such as diesel, varsol, gasoline, etc.
- Have a sampling spigot as outlined in ASTM D140;
- Be equipped with thermometers, accurate and capable of reading to the nearest 2°C.

6.0 QUALITY CONTROL / QUALITY ASSURANCE

6.1 Notification of Deliveries. To ensure that the Department has someone available to carry out sampling (in accordance with ASTM D 140), it shall be a requirement that the Contractor notify the Engineer of the approximate time of delivery of all loads. For loads that are to be delivered after the plant operation hours on normal work days, the Contractor shall give the Engineer notification prior to 4:00 p.m. on the day of delivery. Notification of weekend deliveries shall be given to the Engineer before 4:00 p.m. on Friday. Whenever practical, deliveries should be scheduled to take place during hours of plant operation.

6.2 Deficiencies. Any contamination or nonconformance of the product to the requirements as specified in Table 4.5.1 of this specification shall be corrected to the satisfaction of the Engineer at no cost to the Department.

7.0 METHOD OF MEASUREMENT

The volume of primer shall be calculated at a temperature of 15°C.

8.0 BASIS OF PAYMENT

The liquid asphalt will be paid for at the contract unit price for primer per litre in place, which price shall be full compensation for supplying, heating, handling, transporting and applying of this material and for the supplying of all equipment, plant, labour and incidentals necessary to complete the work herein specified.

9.0 WARRANTY

SECTION 6 - REMOVAL OF ASPHALT CONCRETE

1.0 DESCRIPTION

Removal of asphalt concrete shall consist of the cutting, removal, transporting and disposal of asphalt concrete.

2.0 REFERENCES

3.0 SUBMISSIONS AND DESIGN REQUIREMENTS

4.0 MATERIALS

5.0 CONSTRUCTION METHODS

The Contractor shall, where directed by the Engineer, cut, remove, and dispose of asphalt concrete. Waste material from this operation shall be disposed of in an area approved by the Engineer and this area shall be left in an environmentally acceptable condition.

5.1 Cold Planing. The cold planing equipment shall be automatically controlled for grade and slope during the asphalt concrete removal operation. The surface remaining after cold planing shall have a constant and continuous cross fall matching the intended surface course cross fall and shall have an even texture free of grooves and/or ridges in all directions.

The Contractor shall advise the Engineer at least 48 hours in advance of carrying out the cold planing operation. The cold planing operation shall be carried out in such a manner as to maintain an uninterrupted flow of traffic at all times.

Immediately following the cold planing operation and prior to the traffic being allowed on the cold planed surface, the Contractor shall sweep the surface and remove any bonded asphalt concrete material left by the cold planing machine.

6.0 QUALITY CONTROL / QUALITY ASSURANCE

7.0 METHOD OF MEASUREMENT

Measurement for asphalt concrete removal by cold planing shall be per square metre, regardless of depth.

8.0 BASIS OF PAYMENT

When the depth of asphalt concrete has been predetermined by coring and is identified in the Special Provisions of the contract, then payment for Removal of Asphalt Concrete will be at the contract unit price per square metre of asphalt concrete removed.

When the depth of asphalt concrete has not been predetermined by coring, then payment for Removal of Asphalt Concrete will be at the contract unit price per square metre for each 200 mm depth of asphalt concrete removed. For example, payment will be made once for depths less than or equal to 200 mm, twice for depths from 201 mm to 400 mm, and three times for depths from 401 mm to 600 mm, etc.

The price for the Removal of Asphalt Concrete shall include the supply of all equipment, plant, labour and incidentals necessary to cut, excavate, load, transport and dispose of the asphalt concrete, except materials excavated below the asphalt concrete and paid for as Roadway and Drainage Excavation.

8.1 Cold Planing. Payment for asphalt concrete cold planing will be at the Contract unit bid price per square metre, regardless of depth, which price shall be full compensation for the furnishing of all equipment, materials, labour, transportation, loading, unloading, and incidentals necessary to complete the work herein specified.

9.0 WARRANTY

SECTION 7 - ASPHALT CONCRETE PATCHING

1.0 DESCRIPTION

Asphalt concrete patching shall consist of the supply and placement, by hand or machine, of asphalt concrete under the following conditions:

- Repair or replace asphalt concrete within the limits and to the grade of existing asphalt concrete surface (ie. pot holes, cross-cuts for culverts).
- Correct depressions in the existing asphalt concrete surface in "isolated areas". Isolated areas shall be defined as individual sections less than 300 m^2, placed in one lane in a continuous operation (ie. sags, areas of wheel rutting).
- On repaving contracts, match (blend) existing pavement outside the normal edge of roadway to the grade of the new asphalt concrete surface. (ie. driveways but not to include intersections with public roads).
- On paving contracts, match new asphalt concrete surface to the existing pavement outside the normal edge of roadway. (ie. driveways).
- On paving or repaving contracts contracts prior to the application of a leveling or surface course, match the grade of the existing asphalt concrete surface where the match strip is less than 3 m in width. (ie. matching the edge of pavement to new curb or to an additional lane or new ramp).

2.0 REFERENCES

All reference standards shall be current issue or latest revision at the first date of tender advertisement. This specification refers to the following standards, specifications or publications:

- Division 4 Section 1, Emulsified Asphalt
- Division 4 Section 4, Asphalt Concrete-Hot Mixed-Hot Placed
- Division 4 Section 19, Asphalt Concrete End Product Specification (EPS)

3.0 SUBMISSIONS AND DESIGN REQUIREMENTS

4.0 MATERIALS

5.0 CONSTRUCTION METHODS

Prior to placing the hot mix patching material, the areas of the existing pavement shall be tack coated with RS-1 conforming to Division 4 Section 1.

Asphalt Concrete, Type B, Type B-HF, Type C or Type C-HF conforming to Division 4 Section 4 and Division 4 Section 19, shall be used for Asphalt Concrete Patching. The Contractor shall place Asphalt Concrete Patching by machine, wherever possible, at the discretion of the Engineer to ensure a smooth, uniform surface after compaction.

Areas where existing asphalt material has been removed shall be swept and/or blown (air pressure) clean of any loose debris, leaving clean square edges and a solid foundation.

All cleaned, exposed areas shall be entirely covered with emulsified asphalt tack, which shall be permitted to cure prior to the placement of asphalt concrete mix. Asphalt Concrete Mix shall be produced in accordance with the Department's Standard Specification, Division 4 Section 4 - Asphalt Concrete Hot Mixed - Hot Placed (Method Specification) or Division 4 Section 19 - Asphalt Concrete End Product Specification.

All new asphalt material shall be placed such that compacted material in place matches the grade of the adjoining existing asphalt pavement surface with a smooth transition, within +/-3 mm. All joints shall be properly constructed and compacted such that there are no gaps between the existing asphalt and the new asphalt material.

All new asphalt material shall be placed and compacted to 92.5% of the Maximum Theoretical Density determined in accordance with ASTM D 3203. At the discretion of the Engineer random core samples may be taken to compare measure percent compaction. Asphalt material shall be placed in lifts (lift thickness will depend on depth of patch) and shall be rolled using both a rubber tire roller to obtain maximum compaction and a steel drum roller to obtain smoothness. Combination rollers are acceptable.

6.0 QUALITY CONTROL/QUALITY ASSURANCE

7.0 METHOD OF MEASUREMENT

The quantity of Asphalt Concrete Patching for which payment will be made shall be the number of tonnes of asphalt concrete placed and accepted by the Engineer.

8.0 BASIS OF PAYMENT

Asphalt Concrete Patching will be paid for at the contract unit price per tonne for the Asphalt Concrete actually incorporated and accepted in the work, which price shall be full compensation for furnishing of all materials (except the supply of asphalt cement) blend sand, emulsified asphalt tack, approved anti-stripping additive (if required), heating, handling, transporting, mixing, surface preparation, placing, and rolling of all materials, the supplying of all equipment, plant, labour, and incidentals necessary to complete the work.

The Contractor shall, at their own expense, provide, install and maintain such approved scales and all suitable facilities as may be required to enable the Engineer to determine accurately the mass of Asphalt Concrete loaded in each truck.

9.0 WARRANTY

SECTION 8 - ASPHALT CONCRETE PAVING OF BRIDGE DECKS

1.0 DESCRIPTION

Work under this item shall consist of the application of asphalt concrete on the bridge deck following the tack coating of the protection boards as specified in Division 5 Section 9 of these specifications.

2.0 REFERENCES

All reference standards shall be current issue or latest revision at the first date of tender advertisement. This specification refers to the following standards, specifications or publications:

- Division 4 Section 2, Asphalt Cement
- Division 4 Section 4, Asphalt Concrete-Hot Mixed-Hot Placed
- Division 4 Section 19, Asphalt Concrete End Product Specification (EPS)
- Division 5 Section 9, Waterproofing Concrete Bridge Decks

3.0 SUBMISSIONS AND DESIGN REQUIREMENTS

4.0 MATERIALS

The bridge deck shall be paved with asphalt concrete Type D-HF, unless otherwise specified, and shall conform to Division 4, Section 19 of these specifications.

5.0 CONSTRUCTION METHODS

The asphalt concrete shall be placed as soon as practicable after waterproofing of the bridge deck. The bridge deck shall be paved with two lifts of asphalt concrete Type D-HF, unless otherwise specified, each at a rate of 90 kg/m^2 or as specified within the Contract documents or as directed by the Engineer. Asphalt concrete shall be applied with an approved mechanical spreader and shall meet the requirements of Division 4 Section 4 of these specifications.

Trucks or pavers shall not start, stop, or turn quickly on the deck as this is likely to cause a rupture of the waterproofing or misalign the protection boards. The paver shall travel at a maximum speed of 4 m per minute to provide maximum traction.

The trucks shall dump part of their load into the paver and then move up the deck so the paver does not have to push the truck. Any loose asphalt concrete shall be removed from the protection board before paving begins.

Breakdown rolling of the asphalt concrete shall commence, when the mat cools to 105ºC, using a steel wheel roller weighing a minimum of 7 t. The steel wheel roller shall make only one pass over the mat, running off the deck to stop and turn. Vibratory rollers are not permitted to be used on bridge decks. A board shall be placed against the expansion joint verticals to prevent damage by the roller. Final rolling shall be performed with a rubber-tired roller, also running off the deck to stop and turn.

6.0 QUALITY CONTROL / QUALITY ASSURANCE

7.0 METHOD OF MEASUREMENT

8.0 BASIS OF PAYMENT

Asphalt concrete paving of bridge decks will be paid for at the Contract unit price per tonne of asphalt mix, which price shall be full compensation for paving of the deck, including all equipment, plant, labour and tools necessary to complete the work. Supply and Transportation of Asphalt Cement shall be paid for in accordance with Division 4 Section 2 of these specifications or as specified elsewhere in the Special Provisions of the Contract.

The Contractor shall, at their expense, provide, install, and maintain such approved scales and all suitable facilities as may be required to enable the Engineer to determine accurately the mass of asphalt concrete loaded in each truck.

9.0 WARRANTY

SECTION 9 - DELETED

SECTION 10 - DELETED

SECTION 11 - CRACK FILLING AND CRACK SEALING - (EPWS)

1.0 DESCRIPTION

The work shall consist of either filling or sealing of existing cracks in asphalt pavement including asphalt-covered bridge decks, as directed by the Engineer, with an approved rubberized, joint sealing compound. In general, the work shall be carried out between June 1 and September 30 unless otherwise directed by the Engineer.

2.0 REFERENCES

All reference standards shall be current issue or latest revision at the first date of tender advertisement. This specification refers to the following standards, specifications or publications:

- ASTM D 3405, Specification for Joint Sealers, Hot- Poured, for Concrete and Asphalt Pavements
- Division 1 Section 3, Subsection 8.0, Agreement
- Division 1 Section 3, Agreement
- DOT&PW Traffic Control Manual
- Federal Specification SS-S-164

3.0 SUBMISSIONS AND DESIGN REQUIREMENTS

A copy of the Manufacturer's product specification compliance, for each lot of joint sealing compound to be used in this contract shall be provided to the Engineer prior to the commencement of work.

4.0 MATERIALS

4.1 Sealing Compound. The joint sealing compound shall be a hot-poured, rubberized, asphalt compound certified by the Manufacturer to conform to the requirements of ASTM D 3405 and Federal Specification SS-S-164.

Approved sealing compounds are:

- Hydrotech Hot Poured 6165
- Bakor 590-13A
- W.R. Meadows A N0164R
- Crafco Overflex M.S.
- Bemac Beram 195

4.2 Dusting Material. The material used to dust the sealed crack shall be ordinary Portland cement or agricultural limestone.

5.0 CONSTRUCTION METHODS

5.1 Equipment. The Contractor shall supply all tools, machinery and equipment required in the execution of all phases of the work.

5.1.1 Routing and Cutting Equipment. The routing and cutting equipment shall be of a type which can expeditiously cut and form joints to the sizes specified. The equipment shall be sufficiently flexible and portable to follow random cracking in the pavement. The equipment shall have cutter tools which are capable of cutting grooves 40 mm wide by 10 mm deep leaving the sides of the joint absolutely clean, smooth and ready for sealing.

5.1.2 Melter. A portable melting kettle shall be provided having rubber tires and equipped with an effective, mechanically operated agitator. The kettle shall be of the double boiler, indirect heating type, using a flash point oil (315°C minimum) as a heat transfer medium. The kettle shall be equipped with thermometric controls which automatically control the product temperature and the heat transfer oil.

5.1.3 Compressor. The compressor shall be 75 C.F.M. capacity, or more, to ensure an adequate supply of air to effectively clean the joints.

5.1.4 Hot Compressed Air Equipment. A hot compressed air lance shall be used to clean, dry and pre-heat cracks prior to applying sealant. The air lance shall consist of a compressor propane system providing a high temperature, high velocity blast of air. (See 5.2.1).

Equipment shall be safety approved.

5.2 Crack Filling Procedure. All random and longitudinal cracks greater than 3 mm wide shall be cleaned and filled.

5.2.1 Cleaning the Cracks. A hot compressed air lance shall be coursed along the pavement crack at a slow walk to blow out debris and to heat and dry the crack. All debris shall be removed from the pavement surface immediately. The crack shall be heated until the asphalt concrete turns black. The H.C.A. lance shall be supplied by a 45 kg. L.P. propane bottle and a 75 C.F.M. Compressor.

5.2.2 Melting of the Compound. Care shall be exercised in stripping and removing the joint sealing compound from the original Manufacturer's packages to ensure that no foreign material enters the melting unit. The material shall be melted only in equipment fully meeting the requirements of these specifications. Constant mechanical agitation shall be employed to ensure maximum heating and pouring temperatures as established by the Manufacturer. Overheated, burned or under heated material shall not be used and shall be removed from the site at the Contractor's expense.

5.2.3 Placing Compound. All uncut cracks shall be carefully inspected prior to sealing to ensure that they are thoroughly dry, clean and free from dust and debris. The liquid sealing compound shall be poured within two minutes after the H.C.A. lance has coursed the uncut crack and while it is still hot. Immediately after the crack has been filled it shall be struck off flush with the adjacent pavement surface with a squeegee or other approved device. Particular care shall be taken to ensure that material is not spilled or poured over the adjacent pavement.

5.2.4 Dusting. As the sealing compound begins to cool, the surface of the compound shall be sprinkled with ordinary Portland cement or agricultural lime sufficient to cover the surface.

5.2.5 Crack Sealing Procedure - Routing Cracks. All random and transverse cracks that are less than 20 mm in width but greater than 3 mm in width shall be routed out to a width of no more than 20 mm. The depth of routing shall be no more than 20 mm.

5.2.6 Cleaning the Cracks - Routing. A hot compressed air lance shall be coursed along the pavement crack at a slow walk to blow out debris and to heat and dry the crack. All debris shall be removed from the pavement surface immediately. The crack or rout shall be heated until the asphalt concrete turns black. The H.C.A. lance will be supplied by a 45 kg L.P. propane bottle and a 75 C.F.M. compressor.

5.2.7 Melting of the Compound - Routing. Care shall be exercised in stripping and removing the joint sealing compound from the original Manufacturer's packages to ensure that no foreign material enters the melting unit. The material shall be melted only in equipment fully meeting the requirements of these specifications. Constant mechanical agitation shall be employed to ensure maximum heating and pouring temperatures as established by the Manufacturer. Overheated, burned or under heated material may not be used and shall be removed from the site at the Contractor's expense.

5.2.8 Placing Compound - Routing. All cracks shall be carefully inspected prior to sealing to ensure that they are thoroughly dry, clean and free from dust and debris. The liquid sealing compound shall be poured within two minutes after the H.C.A. lance has coursed the crack and while it is still hot. The surface of the sealing material shall be flush with the adjacent pavement surface on completion. Particular care shall be taken to ensure that the material is not spilled or poured over the adjacent pavement.

5.2.9 Dusting - Routing. As the sealing compound begins to cool the surface of the compound shall be sprinkled with ordinary Portland cement or agricultural lime sufficient to cover the surface.

5.2.10 Daily Output - Routing. All cracks routed shall be sealed on the same day as routed. The Contractor shall have the capability of routing and sealing a minimum of 2500 m/full day.

6.0 QUALITY CONTROL / QUALITY ASSURANCE

A sample of the sealing compound may be tested and approved by the Department or its representative before the actual work is started in the field. Samples may also be taken from each lot of material delivered to the site.

7.0 METHOD OF MEASUREMENT

Measurement for payment for Crack Filling or Crack Sealing shall be based on the accepted filled or sealed cracks measured in metres using a metering wheel following line generally representing the length of the crack. Measurement shall be carried out by Department personnel**.**

8.0 BASIS OF PAYMENT

Crack Filling/Crack Sealing will be paid for at the contract unit price per metre, accepted in place, which price shall be full compensation for the supply of all labour, equipment, material and incidentals necessary to complete the work, including the control and accommodation of traffic in accordance with the DOT&PW "Traffic Control Manual".

9.0 WARRANTY

Upon completion of the Crack Filling and Crack Sealing and visual acceptance of the work in accordance with these specifications, a one year maintenance period will begin. During this period any failure in the Crack Filling and Crack Sealing including but not limited to areas of debonding or complete loss of the sealant shall be repaired or reconstructed at the Contractor's expense to the satisfaction of the Engineer. All material, haul, traffic control and related work required for repair or reconstruction of unacceptable areas shall be paid by the Contractor.

9.1 Final Acceptance. The Department or its representative, and the Contractor will meet and inspect the crack filling and crack sealing one year after the completion of the work. All areas that have failed shall be repaired at the Contractor's expense at no cost to the Department. If the Contractor and the Department do not agree on what areas are failed, the Department's decision shall be final.

The final acceptance of the original Crack Filling and Crack Sealing by the Department shall relieve the Contractor from all maintenance responsibility with respect to the original Crack Filling and Crack Sealing, however, the Contractor shall be held responsible to maintain repaired areas for a period of 12 months after repairs are made.

9.2 Liability. During the period of construction and the one year maintenance period the Contractor shall be responsible for processing any and all claims for property damage and/or bodily injury caused by the failure of the Crack Filling and Crack Sealing including, but not limited to, motor vehicle or pedestrians. The Contractor shall be responsible for the payment of all property damage and bodily injury claims and agrees to save and hold harmless the Department from all such claims as set out in Division 1 Section 3 of these specifications. Claims not handled by the Contractor or their representative efficiently or expediently will be settled by the Department and the costs recovered from the Contractor.

9.3 Security Deposit. Notwithstanding anything to the contrary, as stated in Division 1 Section 3 Subsection 8.0 of these specifications, the security deposit for this contract will be held and retained by the Minister until the maintenance period has expired. The security deposit will be held to ensure that sufficient funds will be available to the Department in the event of non-performance by the Contractor. The Contractor is responsible for all costs including the materials and haul and for the repair of all failures and damages resulting from negligence or faulty workmanship by the Contractor that adversely affects the integrity of the Crack Filling and Crack Sealing which occurs, and is evident prior to, the expiration of the one year maintenance period. The amount of security deposit shall be approximately 20% of the estimated value of the tender.

SECTION 12 - SEAL COAT - (EPWS)

1.0 DESCRIPTION

This item consists of the supply and construction of all single seal coat and double seal coat and warrant the work for one year. The type of seal coat used shall be as specified in the Special Provisions.

1.1 Types of Seal Coats. There are two types of seal coats, defined as:

Type A: Single Seal Coat - The Contractor shall apply a single seal coat surface treatment consisting of a single application of polymer-modified emulsified asphalt and Gradation SC-1 aggregate. An application of fog seal shall be applied to the finished seal coat surface shortly after final sweeping is completed.

Type B: Double Seal Coat - The Contractor shall apply a double seal coat which shall consist of an application of emulsified asphalt followed by a single application of SC-3 aggregate, a second application of emulsified asphalt, and a single application of SC-2 aggregate on a prepared and primed surface. An application of fog seal shall be applied to the finished seal coat surface shortly after final sweeping is completed.

2.0 REFERENCES

All reference standards shall be current issue or latest revision at the first date of tender advertisement. This specification refers to the following standards, specifications or publications:

- ASTM C 127, Test Method for Specific Gravity and absorption of Coarse Aggregate
- ASTM C 131, Test Method for Resistance to Degradation of Small-Size Coarse Aggregate by Abrasion and Impact in the Los Angeles Machine
- ASTM D 5, Test Method for Penetration of Bituminous Materials
- ASTM D 244, Test Methods for Emulsified Asphalts
- ASTM D 2042, Test Method for Solubility of Asphalt Materials in Trichloroethylene
- ASTM D 2415, Test Method for Ash in Coal Tar and Pitch
- ASTM D 4791, Flat and Elongated Particles
- Division 1 Section 3 Subsection 8.0, Agreement
- Division 4 Section 11, Crack Filling and Crack Sealing
- DOT&PW TM-2, Modified Petrographic Analysis
- DOT&PW Traffic Control Manual

3.0 SUBMISSIONS AND DESIGN REQUIREMENTS

3.1 Seal Coat Design. The Contractor shall be responsible for all aspects of the mix design.

For information purposes only a copy of the design shall be submitted to the Engineer two weeks before the work proceeds. Any changes in the design shall be forwarded to the Engineer within one working day.

4.0 MATERIALS

4.1 Supply of Materials. The Contractor shall supply all materials for the execution of the work.

4.2 Aggregate. The cover aggregate shall be produced from a quarried source and shall be washed (where required) and free from thin or elongated particles, clay, wood fragments or other deleterious matter.

The seal coat aggregate shall comply with the following gradation and physical requirements:

Table 4.2.1 - Gradation of Seal Coat Aggregate

Sieve Designation	Cumulative Percent Passing		
	SC-1	SC-2	SC-3
20 000			100
14 000	100	100	40 - 80
10 000	96 - 100	40 - 90	20 - 62
6 300	0 - 43		
5 000	0 - 10	0 - 20	0 - 20
2 500	0 - 3	0 - 8	0 - 10
1 250	0 - 0.5		
80	0 - 0.3	0 - 3	0 - 3

Table 4.2.2 - Physical Properties of Seal Coat Aggregate

Property	Test Method	Aggregate
Absorption, % Max	ASTM C127	1.75
LA Abrasion, %Max	ASTM C131	35
Flat & Elongated % Maximum	ASTM D4791	20
Petrographic No	DOT&PW	135 (A) 150 (B)

4.3 Polymer-Modified Emulsified Asphalt. For Type A, single seal coat application, a polymer-modified emulsified asphalt, CRS-2P shall conform to the requirements specified in Division 4 Section 1 of these specifications.

4.4 Emulsified Asphalt. For Type B, double seal coat applications, the emulsified asphalt shall be HF-150s or HP-200 or CRS-2P and shall conform to the requirements specified in Division 4 Section 1 of these specifications.

4.5 Fog Seal. For application on both Seal Coat Type A and Type B a CSS-1H, CQS-1H or SS-1H emulsion shall be utilized.

5.0 CONSTRUCTION METHODS

5.1 General

5.1.1 Traffic Control. Traffic control shall be in accordance with the latest edition of the Department's "Temporary Workplace Traffic Control Manual" for the class of road to be seal coated.

5.1.2 Weather Limitations. The Department reserves the right to direct the Contractor to discontinue seal coating operations when, in the opinion of the Engineer or representative, weather creates conditions dangerous to the travelling public.

5.1.3 Limits of Work. The seal coat shall be constructed to a width as directed by the Engineer or as specified in the Special Provisions.

5.1.4 Limitations on Advancement. The maximum distance seal coating of a travel lane may proceed ahead of seal coating of an adjacent travel lane shall be 3 km on undivided highways and 4 km on divided highways.

5.2 Equipment. The Contractor shall supply all tools, machinery and equipment in satisfactory working condition at all times to ensure a high quality product.

The Department reserves the right to order the discontinuance of use of any equipment or method of operation which in the opinion of the Engineer, or representative, endangers the travelling public.

5.3 Construction Sequence, Type A Single Seal Coat

5.3.1 Surface Preparation. Any asphalt concrete patching required shall be completed at least three weeks prior to commencement of the seal coat operation. Cracks shall be sealed or filled in accordance with Division 4 Section 11.

5.3.2 Application of Polymer-Modified Emulsified Asphalt. The Contractor shall apply the polymer- modified emulsified asphalt to the existing surface at the application rate determined by the Contractor.

The Contractor shall take necessary action to ensure that structures, curbs, guardrail and other such surfaces shall not be coated with polymer-modified emulsified asphalt. The Contractor shall remove any over spray caused by their operation. Any areas that are to receive an application of polymer-modified emulsified asphalt that are not sprayed shall be corrected. Emulsified asphalt shall not be spilled, sprayed or tracked on completed sections of seal coat. Bridge expansion joints shall be protected with building paper.

5.3.3 Application of Aggregate. The Contractor shall apply the SC-1 aggregate to the surface at the application rate determined by the Contractor.

5.3.4 Brooming. The Contractor shall broom all treated areas as often as necessary following completion of the work until final acceptance as specified in Subsection 9.2 is obtained to reduce the possibility of flying seal coat aggregate.

The Department reserves the right to order the Contractor to broom the seal coated surface should persons or property be subject to unsafe conditions or damage as a result of loose seal coat aggregate.

5.3.5 Fog Seal. The Contractor shall apply a fog seal to the finished seal coat surface shortly after final sweeping. Immediately after application of fog seal the Contractor shall apply clean concrete or masonary sand.

5.4 Construction Sequence, Type B Double Seal Coat. The double seal coat shall be applied in the sequence noted herein.

5.4.1 Emulsified Asphalt - Initial Course. After the surface has been prepared, the Contractor shall apply an emulsified asphalt at the application rate determined by the Contractor.

5.4.2 Aggregate Initial Course. The Contractor shall apply SC-3 aggregate to the prepared surface at the application rate determined by the Contractor.

5.4.3 Emulsified Asphalt - Final Course. After the initial course has been completed, the Contractor shall apply emulsified asphalt at the application rate determined by the Contractor.

5.4.4 Aggregate Final Course. The Contractor shall apply SC-2 aggregate to the completed initial course surface at an application rate determined by the Contractor.

5.4.5 Brooming - Final Course. Brooming shall be as specified in Section 5.3.4.

5.4.6 Fog Seal. The Contractor shall apply a fog seal to the finished seal coat surface shortly after final sweeping. Immediately after application of fog seal the Contractor shall apply clean concrete or masonary sand.

5.4.7 Blotter Sand. A crusher dust or fine sand shall be made available for use as a blotting agent should the seal be affected by a sudden rainstorm.

6.0 QUALITY CONTROL / QUALITY ASSURANCE

6.1 Quality Control. Quality control testing shall be the responsibility of the Contractor throughout every stage of the work including the production of the aggregates and polymer-modified emulsified asphalt, primer and emulsified asphalt and/or high-float emulsions, to the design and placement of the final product.

The Contractor shall provide the Engineer with a copy of all quality control test results within 24 hours of testing.

6.2 Quality Assurance. During the progress of the work, quality assurance testing may be conducted by the Department or its representative to ensure compliance with the specifications.

Results of the quality assurance testing will be available to the Contractor within 24 hours.

Quality assurance testing performed by the Department or its representative will not be considered to be quality control testing. Sampling and testing necessary to perform quality assurance monitoring will be at no cost to the Contractor.

7.0 METHOD OF MEASUREMENT

The quantity for payment shall be the area of accepted work as measured along the lineal grade of the roadway.

8.0 BASIS OF PAYMENT

The contract bid price per square meter of accepted seal coat shall be full compensation for the supply, handling, transportation, mixing and placing of all materials including polymer-modified emulsified asphalt, primer, emulsified asphalt and/or high-float emulsion (initial and final course), fog seal, aggregates (single and/or double coats), blotter aggregate and the supply of all equipment, plant, labour, tools, designs, quality control, traffic control and incidentals necessary to complete the work, as herein specified.

The contract bid price shall also include any other work such as additional signing, brooming, etc., required to protect the traveling public until the final maintenance period has expired and the work receives final acceptance by the Department.

9.0 WARRANTY

Opening to traffic does not constitute acceptance of the work and the Contractor shall remain responsible for all claims and the quality of the work until final acceptance of the work by the Department

9.1 Requirements for Initial Acceptance of the Work. The completed seal coat will be accepted and a one year maintenance period will begin when the following requirements have been met:

- A minimum of 99% coverage has been obtained with no single bare area greater than 0.01 m^2 in any one square metre; and
- There is no streaking or raveling; and
- The surface of the seal has a uniform, even texture; and
- No over-rich or bleeding areas are evident; and
- No deficiencies in workmanship exist.

Seal coat that does not meet the foregoing requirements shall be repaired using compatible materials. All repair or reconstruction cost including, but not limited to, materials, hauling, placing, traffic control, etc., shall be at the Contractor's expense.

Initial acceptance of the work will be given to the Contractor by the Engineer in writing indicating the date of acceptance.

9.2 Final Acceptance. The Department or its representative, and the Contractor shall meet and inspect the seal coat one year after the completion of the work. Poor stone retention, and flushing or bleeding of the surface shall be recognized as failure.

More specifically, the Department recognizes failure has occurred if one of the following conditions exist:

- Less than 97% seal per 100 m section of roadway remains; or
- Any individual bare area greater than 0.06 m^2 exists; or
- Greater than 5 m total length of over-rich or bleeding, area(s) per lane per 100 m section of roadway exists.

All areas that have failed shall be repaired at the Contractor's expense. Any engineering expenses incurred by the Department for these repairs shall be withheld from funds otherwise payable to the Contractor.

Based on the aforementioned criteria to determine failure, if the Contractor and the Department do not agree on what areas are failed, the Department's decision shall be final.

Final acceptance of the original seal coat by the Department shall relieve the Contractor from all maintenance responsibilities, however, the Contractor shall be held responsible to maintain repaired areas for a period of 12 months after repairs are made.

9.3 Liability. During the one year maintenance period the Contractor shall be responsible for processing any and all claims for property damage and/or bodily injury caused by flying aggregate from the work site including, but not limited to, motor vehicle or pedestrians. The Contractor shall be responsible for the payment of all property damage and bodily injury claims and shall indemnify and save harmless the Minister from and against all claims, demands, loss, costs, damages, actions, suits or other proceedings by whomsoever made, brought or prosecuted in any manner based upon, occasioned by or attributable to flying aggregate from the work site or otherwise from the performance of this agreement by the Contractor or their servants or agents. Any such third party claim which is not finalized in a prompt and efficient manner may be finalized by the Department and where this is done the Contractor shall reimburse the Department for any reasonable and necessary payment made to finalize the claim.

9.4 Security Deposit. Notwithstanding anything to the contrary, and as stated in Division 1 Section 3 Subsection 8.0 of these specifications, the security deposit for this contract shall be held and retained by the Minister until the one-year maintenance period has expired. The security deposit shall be held to ensure that sufficient funds will be available to the Department in the event of non-performance by the Contractor. The Contractor shall be responsible for all costs including the materials and haul and for the repair of all failures, traffic control and damages resulting from negligence or faulty workmanship by the Contractor that adversely affects the integrity of the seal coat surface which occurs and is evident prior to the expiration of the one year maintenance period.

SECTION 13 - RECLAIMED ASPHALT CONCRETE

1.0 DESCRIPTION

Reclaimed Asphalt Concrete (RAC) to be used on a contract will be noted in the Special Provisions.

2.0 REFERENCES

All reference standards shall be current issue or latest revision at the first date of tender advertisement. This specification refers to the following standards, specifications or publications:

- Division 4 Section 1, Emulsified Asphalt

3.0 SUBMISSION AND DESIGN REQUIREMENTS

Application rates are as stated in the specifications but may be adjusted by the Department based on field experience.

4.0 MATERIALS

4.1 Slow Setting Emulsified Asphalt. The emulsified asphalt shall be SS-1 and conform to the conditions laid down in Division 4 Section 1 of these specifications.

4.2 RAC Material. All RAC shall be passed through a 50 mm screen when the material is removed from the stockpile and immediately before delivery to the job site. Screening shall remove oversized pieces, crack filler and other undesirable materials.

5.0 CONSTRUCTION METHODS

Prior to the placement of gravels and RAC the existing road shall be fine graded. Weak areas that may exist in the road will be determined by the Engineer. The weak area in the road shall be strengthened as directed by the Engineer.

The RAC shall be applied using a Midland Paver, or an approved equivalent, capable of adding a precisely metered amount of emulsified asphalt. The paver shall be calibrated by gate opening and belt speed (t/hr) which shall determine the rate at which the emulsified asphalt metering device shall operate. The emulsified asphalt metering device shall be calibrated by diverting the flow into a tared tank truck or container.

The breakdown rolling shall be done with a steel wheeled roller, or combination steel-rubber tired roller with a mass not less than 7 t. Compaction shall continue until no further consolidation is evident. A nuclear density gage may be used to determine the maximum density for the given day of placement.

The backrolling shall be done with a pneumatic tired roller, or equivalent with a mass not less than 8 t, one or two days later as requested by the Engineer.

The RAC shall be applied at a thickness of 90 mm unless otherwise directed by the Engineer.

5.1 Operation Limitations. Placing of RAC shall not be permitted after September 15th. RAC Paving shall not be constructed when damage to the finished product may occur for any reason.

5.1.1 Weather Condition. Placing of RAC shall not be permitted if:

- The atmospheric temperature at the construction site is 10ıC and falling;
- The weather is raining or misty.

5.3 Shouldering Operation. The shouldering operation shall not be permitted for a minimum of two weeks after placement of the RAC.

6.0 QUALITY CONTROL / QUALITY ASSURANCE

7.0 METHOD OF MEASUREMENT

When measuring the square metre area of RAC for payment the maximum width used shall be the width requested

prior to paving.

8.0 BASIS OF PAYMENT

8.1 Emulsified Asphalt. Emulsified Asphalt will be paid for at the contract unit price per litre or kilolitre in place, calculated at a temperature of 151C, which price shall be full compensation for the conditions laid down in Division 4 Section 1 of these specifications.

8.2 Reclaimed Asphalt Concrete. Reclaimed Asphalt Concrete will be paid for at the contract unit bid price per square metre which price shall be full compensation for screening, stockpiling if necessary, transporting from the screening operation to road, placing and compacting the RAC, and shall include all equipment, plant, labour and incidentals necessary to complete the work.

9.0 WARRANTY

SECTION 14 - SAND SEAL SURFACE TREATMENT

1.0 DESCRIPTION

Sand Seal surface treatment shall consist of applying a liquid asphalt primer covered by a graded sand to either a prepared aggregate surface or a previously sand sealed surface.

2.0 REFERENCES

All reference standards shall be current issue or latest revision at the first date of tender advertisement. This specification refers to the following standards, specifications or publications:

- Division 2 Section 11, Fine Grading
- Division 2 Section 12, Fine Grading
- Division 3 Section 2, Gravel Type 1, 1S and 2
- Division 4 Section 1, Emulsified Asphalt
- Division 4 Section 5, Liquid Asphalt - Primer

3.0 SUBMISSION AND DESIGN REQUIREMENTS

Application rates are stated in the specifications but may be adjusted by the Department based on field experience.

4.0 MATERIALS

4.1 Prime Coat. The primer shall be a liquid asphalt conforming to the requirements of Division 4 Section 5.

4.2 Sand. The aggregate used as a sand cover shall be a clean sand conforming to the following gradation:

Table 4.14.1 - **Gradation**

Sieve Designation	Cumulative Percent Passing
20 000	100
5 000	65 - 95
315	20 - 70
80	2 - 12

The total clay content of the sand shall not exceed 1.5%.

The moisture content at the time of application shall not exceed 6%.

5.0 CONSTRUCTION METHODS

5.1 Equipment. The contractor shall supply all tools, machinery and equipment required in the execution of all phases of the work.

5.1.1 Pressure Distributor. The pressure distributor shall conform to Division 4 Section 1. The approved pressure distributor used for applying the prime coat shall be capable of spraying closely regulated quantities in a uniform manner over a width, if required, of not less than 3.5 m.

Tank wagons and trucks used for the transportation or application of prime coat shall be equipped with satisfactory thermometers for measuring the temperature of the material to be applied.

5.1.2 Sand Spreader. The approved self-propelled sand spreader shall be capable of applying a continuous uniform quantity of sand at a selected application rate.

The spreader shall be equipped with a rear-mounted hopper designed so that a loaded truck may supply sand to the

hopper while being towed by the spreader. The spreader shall also be equipped with a front hopper and an approved means of transferring the aggregate to this hopper from the rear.

Metering gates on the front hopper shall be capable of adjusting the width of spread and obtaining a uniform flow of aggregate across the spread width.

5.2 New Sand Seal. The sand seal surface treatment wok shall be done in the following sequence:

5.2.1 Preparation of Road. The Contractor shall notify the Engineer at least two weeks prior to start of work to allow sufficient time for certain preparatory work to be carried out by maintenance forces. Prior to placing the prime coat, the existing road shall be fine graded and Type 1 Gravel, conforming to Division 3 Section 2 of these specifications, shall be applied at a rate as directed by the Engineer.

Immediately prior to placing the prime, the gravel shall be floated with a grader to provide an open surface to accept the prime.

5.2.2 Prime. Over the prepared gravel surface, asphalt prime shall be uniformly sprayed by a distributor a specified in Division 4 Section 1 of these specifications at a rate of approximately 1900 ml/m^2 to 2700 ml/m^2 depending on the penetration into the gravel surface. The temperature of the prime shall not be less than 30°C nor more than 45°C. The width of the primed surface shall vary as directed by the Engineer depending on the width of the road.

5.2.3 Application of Sand Cover. Following the application of the prime coat, a sand cover shall be uniformly applied with an approved spreader at a rate of approximately 9 kg/m^2 to 11 kg/m^2.

5.2.4 Rolling. Immediately after application of the sand cover, rolling shall commence using a steel wheeled roller. The entire treated area shall receive at least two passes of the roller. The rolling operation shall be completed within 300 m of the spreader. The speed of the roller shall not exceed 10 km/h.

5.3 Sand Reseal. The existing previously sand sealed surface will be patched, where necessary, and made ready for resealing by the Department maintenance forces. The Contractor shall notify the Engineer at least two weeks prior to start of work to allow sufficient time for preparatory work to be carried out.

5.3.1 Prime Coat. Over the previously sand sealed surface, asphalt prime coat shall be applied uniformly at a rate of approximately 1100 ml/m^2 to 1400 ml/m^2 depending on the amount of deterioration of the existing surface. The temperature of the prime shall be not less than 15°C nor more than 50°C. The width of the primed surface shall be sufficient to cover the previous sand seal unless otherwise directed by the Engineer.

5.3.2 Application of Sand Cover. The Sand Cover is the same as detailed in Subsection 5.2.3.

5.3.3 Traffic Control. Traffic shall not be permitted on the primed surface prior to the application of the sand cover. Adequate signing and traffic control persons shall be provided to direct traffic around the work site.

5.3.4 Weather Limitations. Sand Seal shall only be applied on a dry surface at minimum air temperature of 7°C. Work shall not be carried out when, in the opinion of the Engineer, high humidity, dampness or the imminence of rain are not conducive to successful results.

6.0 QUALITY CONTROL / QUALITY ASSURANCE

7.0 METHOD OF MEASUREMENT

8.0 BASIS OF PAYMENT

8.1 Fine Grading. Fine Grading will be paid for in accordance with Division 2 Section 12 of these specifications.

8.2 Type 1 Gravel. Type l Gravel will be paid for in accordance with Division 3 Section 2 of these specifications.

8.3 Prime. Prime shall be furnished by the Contractor. Payment shall be in accordance with Division 4 Section 5 of these specifications with the exception of the unit of payment which will be the kilolitre and not the litre.

8.4 Sand Seal and Sand Reseal. Payment for the supply and application of sand will be at the contract bid price per cubic metre which shall be full compensation for the manufacture, screening, loading, transporting and spreading of the sand and shall include all labour, equipment, plant and incidentals necessary to complete the work.

No compensation, other than the contract bid price shall be made for variations in application rate or for re-treatment of any areas, as required by the Engineer.

9.0 WARRANTY

SECTION 15 - COLD MIX FOR WINTER PATCHING

1.0 DESCRIPTION

Cold mix shall be a plant mixed material composed of crushed aggregate and modified asphalt binders manufactured (dried and mixed through a hot mix plant) and delivered to the Department at various locations by the Supplier.

2.0 REFERENCES

3.0 SUBMISSIONS AND DESIGN REQUIREMENTS

3.1 Mix Requirements. The cold mix shall be capable of maintaining all of its performance features and remain pliable in uncovered stockpiles for a period of one year after delivery.

3.2 Independent Review. Prior to product acceptance the supplier shall provide to the Department records of independent testing for every 500 t of production indicating that the cold mix meets the requirements of this specification.

4.0 MATERIALS

The cold mix shall possess adequate stripping resistance, workability and cohesion as determined by the following tests:

4.1 Stripping Resistance. 50 g of cold mix shall be placed in 400 ml of boiling distilled water in a 600 ml glass beaker. It shall be stirred with a glass rod at one revolution per second for 3 minutes.

The percentage coating retained shall then be visually evaluated. Retained coatings of less than 95% shall constitute failure.

4.2 Workability. This test method covers the determination of the workability property of cold patching material (CPM) in cold temperatures (e.g. at - 10°C) by blade resistance. The test method TPW-TM7 describing the procedure is available from the Technical Services Library.

A maximum workability index (W.I.) of 2000 Newtons (N) is required.

4.3 Cohesion. Two, 1200 g samples of cold mix and two standard Marshall molds shall be cooled to 4 ± 1°C. Then place sufficient cooled cold mix material (approximately 800 g) into the cooled standard Marshall molds such that the final compacted height of the samples shall be 63.5 mm high with a diameter of 102 mm. The sample shall be compacted using 5 blows of a standard Marshall hammer (4.5 kg) to each side, from a drop height of 457 mm. The sample shall then be extruded and a record of the mass of the compacted sample kept. The compacted sample shall then be placed along the bottom edge of a 305 mm diameter sieve with a 25 mm nominal opening size while both the sieve and the sample are standing on end. The cover shall be placed on the sieve while it is still on end. The sieve shall then be rolled with the sample inside back and forth 20 times, taking approximately 1 second for each of the 20 passes. Laying the sieve against the edge of a table for ten seconds, allow time for sample pieces to fall through the sieve openings. Then flip the sieve and lid over so that the sample in the sieve falls onto the lid and weigh the material retained. Determine the average percentage retained by dividing the weight retained by the original weight.

A minimum retention value of 60% is required.

5.0 CONSTRUCTION METHODS

5.1 Placement. The cold mix shall be placed in potholes (which may or may not be filled with water).

5.2 Compaction. The cold mix will normally be compacted by rolling with truck tires, allowing for a crown of between 3.2 mm and 6.4 mm.

6.0 QUALITY CONTROL / QUALITY ASSURANCE

6.1 Department Testing. Prior to product acceptance the Department may request the supplier to provide samples of the cold mix to be tested by the Department or its representative.

6.2 Stockpile Sampling and Testing. The cold mix may be sampled randomly from stockpile by the Department or its representative. Failure to conform to specification requirements shall result in product rejection.

6.3 Field Performance. The cold mix shall not rut or ravel out of potholes for a period of six months after placement. Failure to conform to specification requirements shall result in product rejection.

6.4 Disposal of Rejected Material. Rejected material shall be weighed and removed from Department facilities at the Supplier's expense**.**

6.5 Replacement of Rejected Material. All rejected material shall be replaced with material conforming to specification by the supplier and delivered to the Department facilities, all at the suppliers expense.

7.0 METHOD OF MEASUREMENT

The Contractor shall, at their own expense, provide, install and maintain such approved scales and all suitable facilities as may be required to enable the Engineer to determine accurately the weight of asphalt concrete loaded into each truck.

8.0 BASIS OF PAYMENT

Cold mix will be paid for at the contract unit price per tonne which shall be full compensation for the furnishing of all materials (including the asphalt cement) including handling, mixing, weighing and transporting to Department depots of cold mix to meet the requirements as herein specified.

9.0 WARRANTY

9.1 Security Deposit. Notwithstanding anything to the contrary, as stated in Division 1 Section 3 Subsection 8.0 of these specifications, the security deposit for this contract will be held and retained by the Minister for one year after final delivery of the product. The security deposit will be held to ensure that sufficient funds will be available to the Department in the event of non-performance by the Contractor. The amount of security deposit shall be approximately 10% of the estimated value of the tender.

SECTION 16 - MICRO-SURFACING - (EPWS)

1.0 DESCRIPTION

Micro-surfacing shall include a scratch course, a surface course and a rut fill application unless otherwise specified.

Micro-surfacing shall consist of the maintenance and application of a homogeneous mixture of cationic polymer modified emulsified asphalt, mineral aggregate, mineral filler, water and other additives to the existing pavement surface.

2.0 REFERENCES

All reference standards shall be current issue or latest revision at the first date of tender advertisement. This specification refers to the following standards, specifications or publications:

- ASTM D36, Test Method for Softening Point of Bitumen
- ASTM D244, Test Methods for Emulsified Asphalts
- ASTM D2170, Test Method for Kinematic Viscosity of Asphalts
- ASTM D2397, Specification for Cationic Emulsified Asphalt
- ASTM D2419, Test for Sand Equivalent Value of Soils and Fine Aggregate
- ASTM E303, Method of Measuring Surface Frictional Properties Using British Pendulum Tester
- ISSA TB-100, Wet Track Abrasion Loss
- ISSA TB-109, Excess asphalt by LWT Sand Adhesion
- ISSA TB-113, Mix Time
- ISSA TB-114, Wet Stripping
- ISSA TB-139, Wet Cohesion
- ISSA TB-144, Classification Compatibility
- ISSA TB-147A, Lateral Displacement
- Division 1 Section 3 Subsection 8.0, Agreement
- Division 1 Section 3, Agreement
- DOT&PW Traffic Control Manual
- Federal Department of Consumer and Corporate Affairs

3.0 SUBMISSIONS AND DESIGN REQUIREMENTS

3.1 Mix Design. The Contractor shall designate the mix proportions and prepare the job mix formula. The aggregate and the polymer modified emulsified asphalt shall be assessed to confirm compatibility. The Contractor shall supply the results of a sand equivalency test for the aggregate.

All component materials used in the mix design shall be representative of the material proposed by the Contractor for use on the contract.

The Contractor shall submit to the Department the final mix design and the results of the tests listed in Table 4.16.1. The material shall not be placed until the Engineer has received the mix design.

Table 4.16.1 - Micro-Surfacing Mix Properties

Test Name	Standard	Requirement
Wet Cohesion @ 30 minutes min. (Set)	ISSA TB-139	Minimum - 12 kg-cm
Wet Cohesion @ 60 minutes min. (Traffic)	ISSA TB-139	Minimum - 20 kg-cm
Excess Asphalt by LWT	ISSA TB-109	Maximum - 538 g/m^2
Wet Stripping	ISSA TB-114	Pass - (90% min)
Wet Track Abrasion Loss, 1 Hour Soak	ISSA TB-100	Maximum - 538 g/m^2
Wet Track Abrasion Loss, 6 Day Soak	ISSA TB-100	Maximum - 807 g/m^2
Lateral Displacement	ISSA TB-147A	Maximum - 5
Classification Compatibility	ISSA TB-144	AAA, BAA 11 Grade Points Min.
Mix Time @ 25ºC	ISSA TB-113	Controllable to 120 Sec. Min
Sand Equivalency	ASTM D2419	65 Min

The micro-surfacing shall be designed so that traffic can be allowed on the surface within one hour.

4.0 MATERIALS

4.1 Polymer Modified Emulsified Asphalt (Binder). The binder shall be a quick set polymer modified cationic type CSS-1H emulsion or equivalent.

Emulsified asphalt and polymer modified asphalt shall be homogeneous after mixing and show no signs of separation within 14 days of delivery. The addition of polymers or other additives after the manufacture of the emulsified asphalt shall not be permitted.

The binder shall conform to the requirements of ASTM D 2397 for an emulsion, with the following amendments as detailed in Table 4.16.1.

Table 4.16.2 - Polymer Modified Emulsified Asphalt

Test Name	Standard	Requirement
Residue by Distillation, % by Mass	ASTM D244	Minimum 62%
Tests on Residue		
Softening Point	ASTM D36	Minimum 57ºC
Penetration, (25ºC, 100 g, 5 s), 0.1mm	ASTM D2397	40 - 90
Kenematic Viscosity @ 145ºC	ASTM D2170	Minimum 650 mm^2/s

4.2 Aggregates. The aggregates shall consist of 100% crushed bedrock material.

4.2.1 Stockpiling. The Contractor shall construct stockpiles at sites of their own choosing. Such sites shall be arranged for, and shall be the responsibility of the Contractor, in all respects. Throughout the duration of the work there shall be sufficient aggregate in stockpile to cover three days production. If different sources of aggregate are to be used, separate stockpiles for each source are to be maintained.

The aggregates shall conform to the gradation requirements as detailed in Table 4.16.3.

Table 4.16.3 - Aggregate Gradation

Sieve Designation	Cumulative Percent Passing	Stockpile Tolerance, %
10 000	100	± 5
5 000	70-90	± 5
2 500	45-70	± 5
1 250	28-50	± 5
630	19-34	± 5
315	12-25	± 4
160	7-18	± 3
80	5-15	± 2

Once the gradation for the mix design has been submitted, the stockpile shall be within the tolerances shown under Stockpile Tolerances.

4.2.2 Sampling. The Department reserves the right to sample stockpiles to ensure the gradation conforms to that used in the mix design.

4.3 Mineral Filler. Mineral filler shall be free of lumps and shall not be air entrained.

4.4 Water. The water shall be potable and shall be free of harmful salts and contaminants.

4.5 Polymer Modifier. The polymer solids, along with special quick setting emulsifier agents shall be milled into the emulsified asphalt at the colloid mill.

The polymer modifier shall consist of a minimum of 3% polymer solids by mass.

4.6 Additives. Additives may be added to the emulsion mix during construction to provide control of the quick-set properties and increase adhesion. They must be compatible with the other components of the micro-surfacing.

5.0 CONSTRUCTION METHODS

5.1 General

5.1.1 Weather Limitations. The Contractor shall be responsible for determining under what weather conditions work on this contract may proceed. The Department, however, reserves the right to direct the Contractor to discontinue micro-surfacing operations when, in the opinion of the Engineer or selected representative, weather conditions endanger the traveling public.

5.1.2 Documentation. The Contractor shall submit to the Engineer, at the beginning of each working day, a written summary of the total quantity and distribution rate of micro-surfacing placed the previous day which shall include a list of the quantities used of each of the components; aggregate, emulsion, cement and additive.

5.1.3 Protection of Work and Traffic Control. The Contractor shall be responsible for providing traffic control required to protect the work zone and to ensure the safe passage of traffic in conformance with the DOT&PW Traffic Control

Manual or as directed by the Engineer. Traffic control shall include traffic control persons, pilot vehicles with operators, signing and all other labour, equipment and material, excluding the supply of signs.

The Contractor shall be responsible for ensuring that the mixture is not damaged by traffic.

Traffic, including construction traffic, shall be kept off the freshly placed mixture for whatever time is required to prevent damage to the surface and until premarking of traffic lines with paint is complete.

5.1.4 Trial Area. At the commencement of the micro-surfacing operation the Contractor shall demonstrate the ability to produce and place micro-surfacing by placement of a trial area 100 m in length and one lane in width.

5.1.5 Appearance. The finished micro-surfacing shall have a uniform texture free from excessive scratch marks, tears or other surface irregularities. Tear marks in any 12 m^2 per-lane are considered excessive if there are:

- Four or more marks 12 mm wide or wider and 100 mm or more long;
- Any marks 25 mm wide or wider and 25 mm or more long.

There shall be no longitudinal ripples (raking) and wash-boarding (chatter) of 5 mm or more in depth as measured with a 3 m straight edge, or other irregularities that will affect the ride quality.

The edges of the micro-surfacing for surface application shall be uniform with neat appearance along the roadway centerline, lane lines, shoulder, pavement edge, and curb lines. Edges shall have no more than ± 50 mm horizontal variance in any 30 m section.

The finished surface shall be uniform and achieve a minimum British Pendulum Number (PDN) of 45 as measured with the British Pendulum Tester in accordance with ASTM E 303.

5.1.6 Joints. The longitudinal and traverse joints shall be neat and uniform in appearance. No excessive buildup, uncovered areas, non-homogeneous mixture or unsightly appearance shall be permitted on longitudinal or transverse joints.

The longitudinal joints in the scratch coat shall be constructed as a butt joint. The longitudinal joints in the surface course shall be placed on lane lines with less than 100 mm overlap on adjacent passes, except where pavement width varies ie. ramps and tapers, and no more than 6 mm difference in elevation between the adjacent passes as measured with a 3 m straight edge.

Transverse joints shall be constructed with no more than 6 mm difference in elevation across the joint as measured with a 3 m straight edge.

5.1.7 Expansion Joints. Expansion joints on any structures encountered in the work shall not be covered by micro-surfacing. Any debris resulting from the micro-surfacing operation shall immediately be cleaned from the expansion joint/seal assemblies.

5.2 Equipment.

5.2.1 Brooms. Power brooms shall be capable of cleaning gravel, sand, dirt and other debris from bituminous surfaces shall be used.

5.2.2 Mixing Equipment. The machine shall be specifically designed and manufactured to place micro-surfacing. The material shall be mixed by an automatic sequenced, self-propelled micro-surfacing mixing machine, which shall be a continuous flow mixing unit, able to accurately deliver and proportion the aggregate, emulsified asphalt, mineral filler, control setting additive, and water to a revolving multi-blade double shaft mixer and discharge the mixed product on a continuous flow basis. The machine shall have sufficient storage capacity for aggregate, emulsified asphalt, mineral filler, control additive and water to maintain an adequate supply to the proportioning controls.

5.2.3 Proportioning Devices. Individual volume or weight controls for proportioning each material to be added to the mix (ie. aggregate, mineral filler, emulsified asphalt, additive, and water) shall be provided and properly marked. These proportioning devices are usually revolution counters or similar devices and are used in material calibration and determining the material output at any time.

5.2.4 Calibration of Proportioning Devices. Prior to beginning placement of micro-surfacing, the Proportioning

Devices shall be calibrated. A copy of the results of the calibration must be given to the Engineer prior to any micro-surfacing operation.

Over the duration of the work, the Proportioning Devices shall be re-calibrated, should the following occur:

- After every 2000 t of aggregate placed throughout the duration of the contract.
- A change in the source of aggregate from that used in the previous calibration.
- Mechanical failure to the application system and/or Proportioning Devices in which repair is required.

5.2.5 Straight Edges. A 3 m straight edge shall be available that may be used to check for cross fall.

5.2.6 Spreading Equipment. The mixture shall be spread uniformly by means of a conventional augured surfacing spreader box attached to the mixing machine and equipped with paddles to agitate and spread the material evenly throughout the box. A front seal shall be provided to ensure no loss of the mixture at the pavement contact point. The rear seal shall act as final strike-off and shall be a one-piece adjustable steel device. The spreader box and rear strike-off shall be so designed and operated that a uniform consistency is achieved to produce a free flow of material to the rear strike-off. The spreader box shall have suitable means provided to maneuver the box to compensate for variations in the pavement geometry.

The rut filling spreader box shall be specifically designed for rut filling applications.

5.2.7 String line. A String line or other device must be provided to ensure the longitudinal edges are straight and meet the existing pavement edge or as directed by the Engineer.

5.3 Construction Sequence

5.3.1 Surface Preparation. The area to be surfaced shall be thoroughly cleaned of all vegetation, loose material, sand, dirt and other debris. Dried mud or other foreign matter, which cannot be removed with the rotary power broom, shall be removed by hand blade or other approved method. Water, if required, shall be applied to pre-wet the surface and immediately ahead of the spreader at a rate to dampen the surface without allowing any freestanding or free flowing water.

5.3.2 Tack Coat The area to be surfaced shall be covered with tack coat. The tack coat should consist of one part cationic polymer emulsified asphalt and three parts water and will be applied with a standard distributor. The distributor shall be capable of applying the dilution evenly at a rate of 0.23 to 0.45 litres per square metre. The tack coat shall be allowed to cure sufficiently before the application of Micro-Surfacing.

5.3.3 Application. The mixture shall be spread to fill minor cracks and shallow potholes and leave a uniform surface. The application shall consist of a scratch coat and a surface coat with a combined minimum application rate of 14 kg/m^2.

Existing ruts greater than 10 mm shall be filled by separate application of micro-surfacing, with a rut filling spreader box, prior to the application of the scratch course and the surface course.

Rut Fill Only application shall be specified where only the rut is to be filled with no surface application to follow. The mixture shall be confined to the immediate area of the rutting or as directed by the Engineer. Edges shall be feathered to blend into the existing cross slope.

Filled ruts shall have no depression. Overfill of ruts shall not exceed 3 mm per 25 mm of rut depth filled as measured with a 3 m straight edge.

For both types of application a sufficient amount of mixture shall be carried in all parts of the spreader box at all times so that complete coverage is obtained. Water may be sprayed into the spreader box to facilitate spreading without harming the mix. No lumping, balling, or unmixed aggregate shall be permitted in the finished surface. Any oversized aggregate or foreign materials shall be screened from the aggregate prior to delivery to the mixing machine.

5.3.4 Handwork. In restricted areas where hand spreading is necessary, slight adjustments to the mix formula may be used to retard the setting time. The mixture shall be poured into a small windrow along one edge of the surface to be covered. The mixture shall be spread uniformly with squeegees or other suitable hand tools.

5.3.5 Rolling. The micro-surfacing shall be rolled at the discretion of the contractor.

5.3.6 Clean-Up. All areas, such as shoulders and gutters, shall have the micro-surfacing mix removed as specified by the Engineer. The Contractor shall, on a daily basis, remove any debris associated with the performance of the work.

6.0 QUALITY CONTROL / QUALITY ASSURANCE

6.1 Quality Control. Quality control testing shall be the responsibility of the Contractor throughout every stage of the work, from and including, the production of the aggregates and polymer modified asphalt emulsion to the design and placement of the final product.

The Contractor shall provide the Engineer with a copy of all quality control test results within 24 hours of testing.

6.2 Quality Assurance. During the progress of the work, quality assurance testing may be conducted by the Department or its representative to ensure compliance with the specifications.

Results of the Quality Assurance testing will be available to the Contractor within 24 hours.

Quality Assurance testing performed by the Department or its representative shall not be considered to be quality control testing. Sampling and testing necessary to perform quality assurance monitoring will be at no cost to the Contractor.

7.0 METHOD OF MEASUREMENT

The method of measurement and payment shall be based on the area covered, measured in square metres.

8.0 BASIS OF PAYMENT

8.1 Micro-Surfacing. Payment for this item will be at the contract unit price per square metre of surface application.

Payment shall be full compensation for the supply, handling, transporting, mixing and placing of all materials, including tack coat and rut filling, the supplying of all equipment, plant, labour, incidentals and traffic control necessary to complete the work.

9.0 WARRANTY

9.1 Initial Acceptance. Initial acceptance of the work will be made provided all of the following conditions are met:

9.1.1 Bleeding and Flushing. The total of areas exhibiting bleeding and flushing shall not exceed two percent in any 100 m^2 area. No bleeding at the joints shall be permitted.

9.1.2 Surface loss (debonding, delamination and/or potholing). The total of areas exhibiting loss of surface shall not exceed two percent in any 100 m^2 area.

9.1.3 Raking and Chatter. The total of areas exhibiting raking and chatter shall not exceed two percent in any 100 m^2 area.

9.1.4 Ruts. The total of areas exhibiting ruts exceeding 6 mm below grade, as measured with a 3 m straight edge, shall not exceed two percent in any 30 m lane segment. The warranty period for rutting shall be sixty (60) days after placement has been accepted by the Engineer. The warranty period shall apply to both initial placement and repairs.

9.1.5 Surface Friction. At the end of the maintenance period the surface shall have a uniform texture and a minimum BPN of 45 as measured with the British Pendulum Tester in accordance with ASTM E 303.

9.2 Maintenance / Repair Period. Upon completion of the Micro-Surfacing and visual acceptance of the work in accordance with these specifications, a two year maintenance period will begin. During this period any failure in the Micro-Surfacing, including but not limited to raking, chatter, raveling, potholes, delamination, debonding, over rich or bleeding areas shall be repaired or reconstructed at the Contractor's expense to the satisfaction of the Engineer. Any 400 m lane segment that has defects exceeding five percent of the area shall require a reapplication of micro-surfacing over the entire segment. All material, haul and related work required for reconstruction of unacceptable areas shall be paid by the Contractor.

At the discretion of the Engineer, any failure in the Micro-Surfacing within the first 12 months of the maintenance period, deemed to be a hazard to traffic, shall be repaired by the Contractor immediately.

9.3 Final Acceptance. The Department or its representatives, and the Contractor will meet and inspect the Micro-Surfacing prior to the expiration date of the two year maintenance period.

Based on the aforementioned criteria for initial acceptance, if the Contractor and the Department do not agree on what areas are failed, the Department's decision shall be final. All areas that have failed shall be repaired at the Contractor's expense at no cost to the Department.

The final acceptance of the original Micro-Surfacing by the Department shall relieve the Contractor from all maintenance responsibility with respect to the original Micro-Surfacing, however, the Contractor shall be held responsible to maintain repaired areas for a period of 12 months after repairs are made.

9.4 Liability. During the period of construction and the two year maintenance period the Contractor shall be responsible for processing any and all claims for property damage and/or bodily injury caused by failure of the Micro-Surfacing including but not limited to motor vehicle or pedestrians. The Contractor shall be responsible for the payment of all property damage and bodily injury claims and agrees to save and hold harmless the Department from all such claims as set out in Division 1 Section 3 of these specifications. Claims not handled by the Contractor or representative efficiently or expediently will be settled by the Department and the costs recovered from the Contractor.

9.5 Security Deposit. Notwithstanding anything to the contrary, and as stated in Division 1 Section 3Subsection 8.0 of these specifications, the security deposit for this contract shall be held and retained by the Minister until the maintenance period has expired. The security deposit will be held to ensure that sufficient funds will be available to the Department in the event of non-performance by the Contractor who is responsible for all costs including the materials and haul and for the repair of all failures and damages resulting from negligence or faulty workmanship by the Contractor that adversely affects the integrity of the Micro-Surfacing which occurs and is evident prior to the expiration of the two year maintenance period. The amount of security deposit shall be approximately 20% of the estimated value of the tender.

SECTION 17 - CONCRETE PAVEMENT

1.0 DESCRIPTION

This section covers the requirements for materials and methods for the construction of Portland Cement concrete pavements. It also describes formwork, placement, finishing, curing and basis of payment.

2.0 REFERENCES

All reference standards shall be current issue or latest revision at the first date of tender advertisement. This specification refers to the following standards, specifications or publications:

- AASHTO Designation M31, Plain, Round, Steel Dowels
- AASHTO Guide Specification for Highway Construction (1984)
- ACI 309 (Revised 1982), Standard Practice for Consolidation of Concrete
- ANSI/ACI 117, Tolerances for Concrete Construction and Materials
- ASTM A 775-M, Epoxy Coated Reinforcing Bars
- ASTM C 174, Test Method for Measuring Length of Drilled Concrete Cores
- ASTM C 260, Air-Entraining Admixtures for Concrete
- ASTM C 309, Specification for Liquid Membrane-Forming Compounds for Curing Concrete
- ASTM C 457, Practice for Microscopical Determination of Air Void Content and Parameters of the Air Void System in Hardened Concrete
- ASTM C 494M, Chemical Admixtures for Concrete
- ASTM C 496, Test Method of Splitting Tensile Strength of Cylindrical Concrete Specimens.
- ASTM C 666, Standard Test Method for Resistance of Concrete to Rapid Freezing and Thaw
- ASTM C 684, Method of Making, Accelerated Curing and Testing of Concrete Compression Test Specimens.
- ASTM C 1064, Temperature of Freshly Mixed Portland Cement Concrete
- ASTM D 698, Test Method for Laboratory Compaction Characteristics of Soil Using Standard Effort
- ASTM D 1751, Preformed Expansion Joint Filler for Concrete Paving and Structural Construction
- ASTM D 1557, Test Method for Laboratory Compaction Characteristics of Soil Using Modified Effort
- CSA 283-M, Qualification Code for Concrete Testing Laboratories
- CSA-A5, Portland Cement
- CSA-A23.1, Concrete Materials and Methods of Concrete Construction
- CSA-A23.2, Methods of Test for Concrete
- CSA A3000, Cementitious Materials Compendium
- CSA G30.16-M, Weldable Low Alloy Steel Deformed Bars for Concrete Reinforcement
- CSA G30.18, Billet Steel Bars for Concrete Reinforcement
- CSA S269.3, Concrete Formwork
- Division 3 Section 11, Unshrinkable Backfill
- Division 5 Section 7, Cast-in-Place Concrete
- Division 2 Section 6, Subgrade

3.0 SUBMISSIONS AND DESIGN REQUIREMENTS

The Contractor's method of protection of the work from cold weather shall be submitted in writing to the Engineer at least two weeks before the protection is required.

Three sets of shop drawings for load transfer devices shall be submitted at least three weeks before commencement of fabrication. These drawings shall include support details, details of all materials and fabrication methods.

4.0 MATERIALS

4.1 Subgrade Materials. Material used to backfill structures shall be unshrinkable backfill or material similar to material removed from the trench. Frozen lumps of earth or rocks greater than 100 mm in diameter shall not be permitted.

4.2 Subbase Materials. Granular subbase for concrete pavement shall conform to the gradation requirements in Table 4.17.1 and the physical properties of Table 4.17.2. The subbase shall have a compacted thickness of not less than 150 mm. The specified gradation shall be verified prior to placing material on the roadway.

Table 4.17.1 Granular Subbase Gradation

Sieve Size (μm)	Percent Passing
40 000	100
10 000	30 - 65
5 000	25 - 55
2 500	15 - 45
630	10 - 25
80	2 - 5

Table 4.17.2 Physical Properties for Granular Subbase

Test	Limits	Test Method
Fractured Particles (min)	80	DOT&PW
Petrographic Number	160	DOT&PW
Absorption % (max)	1.75	ASTM C 127
Plasticity Index	0	ASTM D 4318
Micro Deval % (max)	25	DOT&PW

4.3 Concrete Materials. Concrete and concrete materials shall conform to Division 5 Section 7 with the following exceptions and/or additions:

- The design of the concrete mixture shall be the responsibility of the Contractor and must be approved by the Engineer prior to execution of the work.
- The Petrographic Number for aggregates used in concrete production shall not exceed 135.
- The nominal size of the coarse aggregate shall be 20 to 40 mm. Equipment limitations and production facilities may dictate the smaller aggregate size.
- Aggregate for the concrete shall be non-alkali aggregate reactive, as shown by recent (within last two years) laboratory testing in accordance with latest addition of CSA A23.2-14A or have a satisfactory service record in similar environments. Satisfactory service record means that there is no evidence of alkali aggregate reaction within a service life of 15 years.
- Aggregate for concrete shall not be susceptible to D-cracking. Concrete prisms shall be tested in accordance with ASTM C 666 Procedure A for 350 cycles. At end of 350 cycles the maximum allowable expansion shall be 0.035%.
- The concrete shall have a flexural strength of 4.85 MPa at 28 days or as specified in the Special Provisions.
- The minimum total cementitious material content shall be 335 kg/m^3.
- Low calcium (less than 10% CAO) Class F fly ash may be used at an addition rate not to exceed 25 percent by mass of total cementitious material.
- The maximum water to cementing materials ratio shall be 0.45.
- The slump at the point of discharge shall be 45 mm ± 20 mm.
- The air content at the time and point of discharge shall be 5 - 8%. The air void parameters shall be determined on the proposed concrete mixture design and shall be as specified in latest edition of CSA A23.1.
- The temperature of the concrete at point of discharge shall be 10ºC to 27ºC.

4.4 Tie Bars and Dowels.

4.4.1 Tie Bars. Tie bars shall be 15M epoxy coated deformed reinforcing bars conforming to the requirements of ASTM A 775.

4.4.2 Dowels. Dowel dimensions shall be as indicated on the contract drawing. Dowels shall be epoxy coated, smooth, straight and free from deleterious material. The free ends shall be beveled. For half their length, the dowels shall be coated with a bond-breaking compound, such as oil or a form release agent or be enclosed in a tight-fitting plastic sheath.

4.5 List of Acceptable Rubberized Asphalt Joint Sealants.

Source	Product	Pour Temp, °C
Baker Inc 284 Watline Ave Mississauga, Ontario L4Z 1P4 (416) 890-4800 FAX (416) 890-4866	WI 317	175-190
Bitumar Inc 11650 Boul Metropolitan Est Montreal, Quebec H1B 1A5 (514) 645-4561 FAX (514) 645-6978	Superflex 80 Superflex 100	170-190 170-190
Crafco Inc 6975 W Crafco Way Chandler, Arizona, USA 85226 (602) 276-0406 Watts (800) 528-8242 FAX (602) 961-0513	Crafco 34211	190-210
Hydrotech Membrance Corp 110 West Beaver Creek Rd Unit 13 Markham Ontario L4B 1J9 (416) 764-9655 FAX (416) 764-9649	Sealz 6160	185-205
Koch Materials Co 43 Idustrial St Toronto Ontario M4G 1Z2 (416) 421-2552 FAX (416) 421-2378	9001	180-205
WR Meadows of Canada Ltd 70 Hannant Crt Milton Ontario L9T 5C1 (416) 542-7220 FAX (416) 878-4125	164 Hi-Spec	188-199 188-199
Permaquik Corp 1591 Trinity Dr Mississauga Ontario L5T 1K4 (416) 564-6100 FAX (416) 564-6110	Permaquik 6190	190-200
Note: For all of the above products, method of application is either by pressure or gravity feed.		

5.0 CONSTRUCTION METHODS

5.1 Weigh Scales. Weigh scales shall be installed and maintained in accordance with Division 1 Section 39 of the Standard Specification.

5.2 Water for Compaction, Dust Control and Dampening Subbase. At least one mobile unit of not less than 4,500 L capacity for applying water shall be available for use on the project at all times.

5.3 Subgrade Preparation. The installation of all utility mains and/or structures, where possible, shall be completed before the commencement of base construction or concrete paving. All utility trenches within the pavement area shall be backfilled to subgrade level to the requirements of the Engineer.

Excavation backfill shall be compacted in accordance the requirements as detailed in Division 2 Section 8 of these specifications. Unshrinkable backfill maybe used where indicated or approved by the Engineer.

The subgrade shall be proof rolled by means of a vibratory roller with a minimum static mass of 8 tonnes and dynamic mass of 20 t. All soft and yielding material, as observed by the Engineer, shall be removed and replaced with suitable material.

Additional base material shall be placed as shown on the drawings.

5.4 Subbase Preparation. The subbase material shall be compacted using the control strip method as outlined in Division 3 Section 5 of these specifications.

The base shall extend beyond the pavement edge as shown on the drawings.

The prepared subbase shall be checked for conformity with the cross-section and grade tolerances of ± 10 mm specified using an approved scratch template, or other method approved by the Engineer. In-place material shall be adjusted to comply with the tolerances by recompaction, and again checked.

Prior to placing the concrete, the subbase shall be thoroughly wetted. Wetting shall be carried out such that standing water is not present on the surface.

5.5 Formwork and Guide Lines.

5.5.1 Formwork. All formwork shall conform to Division 5 Section 7.

5.5.2 Guide Lines for Slip-Form Paving. Guide lines shall be provided at a constant height above, and at a constant horizontal distance from, the edge of the proposed pavement.

Guide lines shall be supported from steel pins by connectors capable of fine horizontal and vertical adjustment.

The pins shall be positioned, connectors set, and the guide lines tensioned on the connectors by the Contractor sufficiently in advance of the paver to permit inspection and checking.

5.6 Tie Bars and Dowels.

5.6.1 Tie Bars. Tie bars shall be used at all longitudinal joints.

Tie bars shall be clean and shall be inserted in such a manner that voids are not created around the bar.

Tie bars shall be located at the mid depth of the slab as shown on the drawings and installed such that the location does not deviate more than 20 mm from the location shown.

Tie bars shall not be placed within 525 mm of a transverse joint.

5.6.2 Dowels. Dowels shall be placed in assemblies at transverse joint locations in advance of the concreting operation, or by a dowel implanter machine during concrete placing and spreading. Dowel assemblies must be fixed to the subbase so they will remain stable and undisturbed during the paving operation.

Dowels shall be evenly spaced and placed parallel to each other and parallel to both the pavement centerline and the pavement surface.

Placing Tolerance - deviation of not more than one degree from alignment of the pavement; and parallel to each other, within a tolerance of 0 degrees and 45 minutes.

Dowel locations shall be visibly marked by the Contractor on the form, adjacent slab or by stakes or pins on the shoulder to permit accurate location for joint-forming operation.

5.7 Concrete Production, Transportation and Placing.

5.7.1 Concrete Production. Concrete shall be produced in accordance with Division 5 Section 7.

5.7.2 Transporting Concrete. The concrete mixing, delivering and spreading operations shall be coordinated as to provide a uniform rate of progress of the paving equipment, with stopping and starting of the paver held to a minimum.

5.7.2.1 Delivery with Non-agitating Equipment. Concrete that is completely mixed in a stationary mixer may be transported in non-agitating equipment. The bodies of such equipment shall be smooth, water tight, steel containers equipped with gates that will permit control of the discharge of the concrete.

Covers shall be used to provide protection during inclement weather.

Discharge of concrete shall be complete within 60 minutes after introduction of the mixing water to the cement and aggregates.

5.7.2.2 Delivery with Agitators or Truck Mixers. After completion of mixing, concrete may be transported to the site by means of agitator trucks or truck mixers. The equipment shall be operated at the speed of rotation designated by the Manufacturer of the truck at the agitating speed.

The concrete shall be delivered to the site, in a thoroughly mixed and uniform mass, and discharged with the uniformity required.

Concrete shall be transported to its final position such that segregation or loss of slump is minimized and the concrete has the required workability at the point and time of discharge.

Delivery equipment shall not operate from previously paved lanes until the pavement is at least 7 days old or the concrete has achieved 75% of its specified flexural or compressive strength. If equipment operating in the paving lane causes rutting or displacement of the base or subbase, smaller loads, suitable runways, tracked equipment or combinations of these procedures shall be used.

5.7.3 Placing. Concrete shall be placed on dampened subbase, and as close as possible to its final position, so as to minimize rehandling.

Placing shall be continuous between planned transverse joints without the use of intermediate bulkheads. When an interruption in placing concrete of more than one hour occurs, a transverse construction joint shall be formed immediately, unless otherwise directed by the Engineer.

When required, hand spreading of concrete shall be done with shovels, not rakes.

Workers shall not be permitted to walk in freshly placed concrete with their boots coated with deleterious material.

The concrete shall be placed or subsequently distributed to an even depth ahead of the screw feed augers. The machine shall spread, screed, compact and float finish the concrete in one pass.

Concrete shall be placed as near as possible to a dowel assembly, but shall not be dumped directly onto the assembly so as to cause misalignment.

Concrete shall not be placed on snow or ice or on a frozen subbase or subgrade.

5.8 Consolidation, Finishing, Surface Tolerances.

5.8.1 Consolidation. Concrete shall be thoroughly consolidated against and along the face of all forms and into the face of previously placed concrete.

For fixed-form paving with vibrating screeds, hand-held vibrators shall be used to supplement consolidation adjacent and along the full length of the form. They shall also be inserted at regularly spaced intervals along both sides of dowel assemblies. The vibrators shall not come in contact with the subgrade, subbase, forms, tie bars or dowel assemblies. Vibrators shall not be operated longer than 15 seconds in any one location.

For slip-form pavers, the concrete shall be consolidated by internal vibrators of sufficient number, spacing and frequency to provide uniform consolidation to the entire pavement width and depth. The vibrators shall not come in contact with the subgrade, subbase, tie bars or dowel assemblies. The vibrators shall not operate while the paver is stopped and shall be positioned between and parallel to dowel bars.

Vibration procedures shall conform to ACI 309.

5.8.2 Finishing. Adding water to the surface of the concrete to assist the finishing operation shall not be permitted. A fine spray of water shall be permitted only to prevent shrinkage cracking caused by rapid evaporation of surface moisture after finishing and texturing operations are completed. Only approved spray equipment shall be used.

Following strike-off and consolidation, the concrete pavement shall be scraped with an aluminum or magnesium straightedge 3 m long, equipped with a handle to permit operation from the edge of the pavement. All excess water or laitance shall be removed from the surface before scraping commences.

Use of wood floats shall not be permitted.

The edges of the slab shall be finished with an edging tool having a radius not more than 6 mm.

Texturing shall be performed full width in the longitudinal direction. Preceding the grooving of the plastic concrete, the surface of the concrete shall be macro-textured with either a burlap or AstroTurf drag. The grooving or tining shall be performed with a mechanical device such as a wire comb. The wire comb shall have a single row of tines, each having a width of 2 - 4 mm and spaced uniformly at 19 mm on center to produce a groove depth of 2 - 4 mm in the plastic concrete.

The surface shall be free from displaced aggregate particles and local projections.

Pavement protection shall be employed when rain, sufficient to mar the texture of the concrete surface, is expected.

Concrete shall not be placed during rain. Any damage caused by rain shall be repaired or pavement replaced at the Contractor’s expense.

5.8.3 Surface Tolerance. The finished surface shall be tested for smoothness by use of a 3 m long straightedge placed parallel to the centerline of the pavement in each wheel line and/or by use of a mechanical multiple wheel profilograph to determine the Profile Index. Ordinates measured from the face of the straightedge to the surface of the pavement shall at no place exceed 6 mm.

Smoothness Testing shall be as specified in the special provisions for the contract or as stated in the standard specification.

Areas that do not meet the required surface accuracy shall be clearly marked out, and the Contractor shall, at their own expense:

- Grind down any areas higher than 6 mm but not higher than 12 mm above the correct surface, as measured by the straight-edge.
- Correct any areas lower than 6 mm but not lower than 12 mm below the adjacent concrete surface as measured by the straight edge by grinding down the adjacent high areas.
- Break out and replace sections where the straightedge deviation exceeds 12 mm from the correct surface. The volume of concrete removed and the method of removal shall permit the formation of a new slab of the required quality which is in no way inferior to the adjacent undisturbed slab.

All grinding shall be carried out by an approved machine of a type and capacity suitable for the total area of grinding involved until the surface meets the specified requirements. The surface texture requirements of this specification shall be required following the grinding operation. In no case should the specified thickness of pavement be reduced due to grinding.

5.9 Curing and Protection. As soon as practical, after the texturing operation is completed, the entire pavement surface, including exposed sides, shall be cured by protecting it against loss of moisture, rapid temperature change and mechanical injury, in accordance with the requirements of Division 5 Section 7.

The Contractor shall have the material and equipment needed for adequate curing on hand and ready to install before actual concrete placement begins. If the curing procedure requires the use of water, the Contractor shall have adequate water supply available on site.

White liquid membrane-forming curing compounds shall be applied to the exposed surface and edges of slip-formed pavement or the surface of formed concrete pavement following the final texturing operation. Complete and uniform coverage, at a rate of 3 to 4 m^2/L shall be required. The compound shall be kept agitated to prevent pigment from settling. It shall be applied to the pavement edges of formed pavement immediately following the removal of the forms.

Curing compound shall to be removed by the Contractor if bond cannot be achieved between the paint used for pavement markings and the concrete.

Membrane curing compound shall not be applied to joint faces receiving sealant.

Concrete pavement shall have a minimum 30 day air drying period, following final curing, before the first application of deicing salts.

5.10 Jointing. Transverse contraction control joints, and all longitudinal control joints shall be constructed and located as indicated on the drawings, or as required by construction operations.

Transverse and longitudinal control joints shall consist of planes of weakness created by cutting vertical grooves in the pavement surfaces or depending on construction methods, the longitudinal joint may be formed.

Transverse control joints shall extend to one third the depth of the slab.

Sawed transverse control joints shall be located on the surface of the pavement by the Contractor with suitable markings in advance of sawing. Sufficient saws and blades shall be available to maintain continuity of work and timely sawing. Standby equipment shall be available in the event of equipment breakdown.

Sawing shall commence as soon as the concrete has hardened sufficiently to permit sawing without excessive raveling, usually within 12 hours. Joints shall be sawn during day and night, if necessary, in order to prevent uncontrolled shrinkage cracking.

Sawing of any joint shall be omitted if a random crack has developed at or near the joint location before the time of sawing. Sawing shall be discontinued if a crack develops ahead of the saw. When a crack occurs ahead of the sawing, usually as a result of sawing too late, remedial measures may be required, such as sawing every third or fourth joint followed by sawing the intermediate joints.

Sawed grooves forming a reservoir for joint sealant shall be formed by one of the following methods:

- In two stages, first, by cutting a narrow (3 mm) groove to the required saw cut depth and second, by widening the initial groove by secondary sawing to the required sealant-reservoir dimensions.
- In one operation, using two different diameter (and width) blades simultaneously to achieve the required sealant-reservoir dimensions.

Concurrent with the sawing operation, the grooves shall be cleaned of laitance and grit by high pressure water jets.

Control joints in adjacent lanes shall be constructed at the same chainage.

If extreme anticipated conditions make it impractical to prevent erratic cracking by early sawing, the transverse control joints shall be formed before the initial set of the concrete. Formed transverse control joint grooves shall be made by depressing a tool or device into the plastic concrete the required depth and the full width. The tool or device shall remain in place until the concrete has attained its final set and shall then be removed without disturbing the adjacent concrete.

The concrete surface shall be finished by floating across the formed groove, and retextured if required.
Transverse control joints may also be formed by installing a parting strip to be left in place, the required depth and full

width. Parting strips shall not be depressed below the pavement surface but shall be flush with the surface.

Transverse construction joints of the type shown on the drawings shall be placed whenever the placing of concrete is to be suspended or interrupted for more than one hour. Dowel alignment through the bulk head shall meet standards set in Subsection 5.6.

Longitudinal control joints shall consist of planes of weakness created by cutting or forming grooves in the surface of the pavement at the locations shown on the drawings. The depth of the grooves shall be at least one-third the depth of the slab or as specified.

Longitudinal construction joints shall be edged with a 6 mm radius edger and textured to match adjacent concrete.

5.11 Joint Sealing. Joint sealing will not be permitted in wet or cold weather.

Joints shall be prepared by saw cutting or forming as described in Subsection 5.10 or as shown in the contract drawings.

Immediately prior to sealing operations, all joint faces shall be abrasive blast cleaned and then cleaned and dried with an oil free hot compressed air lance. Following cleaning a bond breaker approved by the Engineer shall be placed at the base of the reservoir cut.

The joint sealant material shall be a hot poured rubberized asphalt or preformed neoprene sealant as shown in the contract drawings and installed in accordance with the Manufacturer's written instruction.

5.11.1 Rubberized Asphalt Sealant. Joint sealant shall not be applied prior to 21 days of concrete curing.

The joint sealing compound shall be melted uniformly and slowly while being stirred constantly in the heating kettle. The compound shall be heated until it can be drawn free flowing and lump free from the heating and mixing kettle at a temperature within the range specified by the Manufacturer of the compound. It shall be poured within the specified temperature range.

Sufficient compound shall be poured into the joint so that, upon completion of the work, the surface of the compound shall be 3 mm to 6 mm below that surface of the pavement. If the compound subsides to a level below that indicated above, a second pouring will be required. When more than one pouring is required to fill the joint, succeeding pours shall be made immediately. The sealant shall be prevented from flowing beyond the edge of the slab. Longitudinal joints shall be sealed immediately following the sealing of the transverse joints in the adjacent lane.

Any material spilled or excess material in the joint shall be removed immediately and the pavement surface cleaned.

5.11.2 Preformed Neoprene Sealant. The joint shall be sealed immediately following the concrete curing period and completion of joint cutting and cleaning.

The sequence of installation and the joint sealing procedure shall be in accordance with the Manufacturer's written instructions.

5.12 Opening to Traffic. The pavement shall not be opened to traffic until specimen cylinders or beams conforming to the requirements of the specification have attained 75% of the design strength of concrete, either as flexural strength when tested by the third-point loading method, or as compressive strength. If such tests are not conducted, the pavement shall not be opened to traffic until 10 days after the concrete has been placed. Before opening to traffic, the pavement shall be cleaned, joints shall be sealed and all markings completed.

6.0 QUALITY CONTROL / QUALITY ASSURANCE

6.1 Quality Control. The Contractor shall take all control measures required to construct the concrete pavement in accordance with the specification.

6.2 Quality Assurance. The quality assurance procedure of the Department shall not be used to replace or augment the quality control by the Contractor. Testing of the concrete during placing shall be in accordance to Division 5 Section 7 and as amended by the following clauses.

The standard test for assessing the strength of concrete will be the flexural test as per CSA A23.2-3C and CSA A23.2-8C. Compressive strength tests of cylinders in accordance with CSA A23.2-3C and CSA A23.2-9C may also

be used to assess the suitability and uniformity of the concrete. Conformance testing will be the responsibility of the Owner.

The frequency of tests for compressive strength shall conform to the requirements of CSA A23.1. The frequency of tests for flexural strength shall be as for the compressive strength.

Prior to construction or concurrent with construction a correlation may be established between flexural strength and compressive strength. On the basis of the correlation, the required strength may be expressed in terms of flexural or compressive. The Contractor shall then be required to meet or exceed the determined compressive strength as well as the flexural strength.

Cores shall be drilled from the pavement to determine insitu compressive strength and slab thickness. Core compressive strengths may be used to determine the length of time required prior to allowing the pavement to be put into service.

Cores will be the basis of acceptance for slab thickness. One core shall be drilled for every 1000 m^2 of pavement surface area. No core shall be drilled within 250 mm of any joint or edge of slab. All cores shall be 100 mm nominal diameter. Cores shall be measured for slab thickness in accordance with ASTM C174.

Core holes in the pavement shall be filled immediately after coring with a concrete repair material approved by the Engineer. The patch shall be finished flush with the surrounding surface. Immediately prior to filling, the vertical surface of the hole shall be cleaned of any paste remaining from drilling and all free water shall be removed. After filling, all excess material shall be removed from the slab surface.

Cores shall be tested in compression according to CSA A23.2-14C at the age desired to put the pavement into service, or at 28 days. All cores shall be moist cured until the time of test.

7.0 METHOD OF MEASUREMENT.

7.1 Water for Compaction, Dust Control and Dampening Subbase. The method of measurement shall be the number of kiloliters used for compaction, dust control and dampening subbase.

7.2 Common Excavation. The area to be excavated shall be determined by proof rolling or as directed by the Engineer. The volume shall be the number of cubic meters as shown on the cross section between the original position of the ground line as measured before the excavation of material and the lines of the completed and accepted excavation. The volume shall be computed by the average end area method.

7.3 Compaction. The quantity of compaction to be paid for under this item shall be the number of cubic meters of compacted material placed in the excavation area or as directed by the Engineer. The volume paid shall be as shown on the cross section between the accepted final position of the excavation and the lines of the completed and accepted top of subgrade. The volume shall be computed by the average end area method.

7.4 Fine Grading of Subgrade. The quantity of fine grading to be paid for shall be the actual number of square meters of fine grading prepared in accordance with the plans, or as directed by the Engineer, on which the granular subbase for concrete pavement is to be placed. Fine grading and disposal includes:

- Removal and disposal of surplus subgrade
- Deleterious material (grass, bushes, alders), and
- Proof rolling (considered incidental)

7.5 Supply & Install Geotextile. The quantity of geotextile, if used, shall be paid per square meter for material placed as directed. This measurement shall not include the required lapping of material at joints.

7.6 Granular Subbase for Concrete Pavement. The quantity of granular subbase shall be per tonne as weighed on the Contractor's scale.

The quantity of granular subbase for concrete pavement placed in stockpiles shall be per tonne as determined by the Engineer.

7.7 Portland Cement Concrete Pavement. The quantity of portland cement concrete pavement shall be the area in

square metres computed from the dimensions shown on the drawings or as revised by the Engineer.

8.0 BASIS OF PAYMENT

8.1 Water for Compaction, Dust Control and Dampening Subbase. Water for compaction and dust control will be paid at the contract unit price bid per kilolitre. This price shall be full compensation for furnishing, handling, transporting and applying water, and for the supplying of all equipment, plant, labour and incidentals necessary to complete the work.

8.2 Common Excavation. The volume of common excavation measured will be paid at the contract unit price bid for common excavation. This price shall be full compensation for the excavation, trimming of slopes, disposal of surplus and waste materials, preparation and completion of subgrade, shoulders and roadway, and the furnishing of all equipment, tools, labour and incidentals necessary to complete the work.

8.3 Compaction. The quantity of compaction as specified will be paid at the contract unit price bid for compaction. This price shall be full compensation for the work described in this section including the furnishing of all equipment, labour, materials and incidentals necessary to complete the work. No payment will be made for material placed beyond the plane measured 1 m horizontally from the outside of the theoretical embankment slope.

8.4 Fine Grading of Subgrade. Fine grading will be paid at the contract unit price per square metre. This price shall be full compensation for all scarifying, shaping, trimming, filling and rolling, handling and disposal of all surplus material, and for the furnishing of all equipment, plant, labour and incidentals necessary to complete the work. Fine grading shall not be paid for more than once for any area.

8.5 Supply & Install Geotextile. The price for supply and install geotextile shall be at the contract unit price per square metre. This price shall be full compensation for the supply and installation of geotextile and shall also include all equipment, labour and incidentals necessary to complete the work.

8.6 Granular Subbase for Concrete Pavement. Payment for granular subbase will be paid at the contract unit price per tonne, complete in place. The price shall be full compensation for the furnishing of all materials, equipment, labour, compaction and incidentals necessary to complete the work. Payment for material in stockpile will be paid as per Division 3 Section 2 of these specifications.

8.7 Portland Cement Concrete Pavements. Payment for portland cement concrete pavements shall be made at the contract unit price bid per square metre.

The payment for portland cement concrete pavements shall be considered full compensation for the preparation of and furnishing all materials, aggregates, cement, supplementary cementing materials, water, admixtures and other materials, all joints and joint filler materials, tools, equipment, falsework, forms, bracing, labour, surface finish, curing and all other items of work required to complete the work as shown on the plans and as outlined in the specifications.

9.0 WARRANTY

SECTION 18 - ROLLER COMPACTED CONCRETE - (WS)

1.0 DESCRIPTION

The work covered by this section consists of the provision of all plant, materials, labour and equipment for the production, placing, compacting and curing of Roller Compacted Concrete pavement (RCC).

2.0 DEFINITIONS

- **Cold Joints**. Every horizontal and/or vertical surface of RCC exposed for more than 90 minutes (measured from the initial water cementitious contact) before it is covered with another concrete layer.
- **Vertical Control Joints.** Sawed joints regularly spaced and intended to control concrete shrinkage cracks.
- **Construction Joints.** Joints resulting from the interruption of paving and as described in the Contractor's operations plan.
- **Isolation Joints.** Installation of a non-absorbing material in order to prevent the adhesion of the PRCC to existing infrastructure, as shown on drawings.
- **Granular Base.** This is the granular material placed directly under the RCC and on top of the granular subbase layer. It is typically called Type 1.
- **Granular Subbase.** This is the granular material placed on top of the natural subgrade and is typically called Type 2.
- **Subgrade.** This is the native material underneath a constructed road or pavement.

3.0 REFERENCES

All reference standards shall be the current issue or latest revision at the first date of the tender advertisement. This specification refers to the following standards, specifications or publications:

- ASTM C 171, Standard Specification for Sheet Materials for Curing Concrete
- ASTM C 260, Standard Specification for Air-Entraining Admixtures for Concrete
- ASTM C 309, Standard Specification for Liquid Membrane-Forming Compounds for Curing Concrete
- ASTM C 457, Standard Test Method for Microscopical Determination of Parameters of the Air Void System in Hardened Concrete
- ASTM C 494, Standard Specification for Chemical Admixtures for Concrete
- ASTM C 496, Standard Test Method for Splitting Tensile Strength of Cylindrical Concrete Specimens
- ASTM C 666, Standard Test Method for Resistance of Concrete to Rapid Freezing and Thawing
- ASTM C 1040, Standard Test Methods for In-Place Density of Unhardened and Hardened Concrete, including Roller Compacted Concrete, by Nuclear Methods
- ASTM C 1170, Standard Test Method for Determining Consistency and Density of Roller-Compacted Concrete Using a Vibrating Table
- ASTM C 1435, Standard Practice for Moulding Roller-Compacted Concrete in Cylinder Molds Using a Vibrating Hammer
- ASTM D 698, Standard Test Methods for Laboratory Compaction Characteristics of Soil Using Standard Effort
- ASTM D 1557, Standard Test Methods for Laboratory Compaction Characteristics of Soil Using Modified Effort
- ASTM D 6690 -15 Standard Specification for Joint and Crack Sealants, Hot Applied, for Concrete and Asphalt Pavements
- CAN/CSA 283-M, Qualification Code for Concrete Testing Laboratories
- CSA-A23.1, Concrete Materials and Methods of Concrete Construction
- CSA-A23.2, Test Methods and Standard Practices for Concrete
- CSA-A3000, Cementitious Materials Compendium
- Division 2 Section 6, Subgrade
- Division 4 Section 17, Concrete Pavement
- Division 5 Section 7, Cast-in-Place Concrete

4.0 SUBMISSION AND DESIGN REQUIREMENTS

4.1 Mix Design Submission. An RCC mix design shall be submitted to the Engineer for approval at least four (4) weeks prior to commencing work. The mix design report shall be signed by a Professional Engineer registered to practice in the Province of Nova Scotia, and shall summarize cementitious materials, compressive and flexural

strengths for the proposed mix and required density after placement. This report shall also include documentation indicating that the proposed materials and aggregates meet the specified requirements.

4.2 Quality Management Plan. In addition to the mix design above, the Contractor is required to submit a Quality Management Plan to the Engineer at least four (4) weeks prior to beginning paving operations. The Quality Management Plan shall include at minimum the following:

- Identification of key personnel within the project and appropriate contact information. Include a project manager, site superintendent, quality control manager, RCC consultant, or other positions as applicable.
- Identification and contact information of subcontractors responsible for any part of construction.
- Contractor's construction schedule for RCC work.
- Proposed RCC laydown pattern showing:
    - Direction of paver
    - Paving width
    - Daily production and trucking rates
    - Curing pattern
    - Planned longitudinal and transverse cold joints
    - Planned construction joints
    - Lift thickness, if multiple lifts are necessary
    - Proposed mixing cycle time
- Manufacturer's data and specifications for mixing plant, hauling, placing, laydown and compaction equipment.
- Layout of plant showing location, aggregate storage, water supply and mixing plant.
- Methods of handling, storing, delivery and mixing of materials.
- Procedure for placing, compacting and curing RCC.
- Method of protection of the work during cold weather (less than 5°C), and hot weather (more than 29°C) conditions

5.0 MATERIALS

5.1 Concrete Materials. All materials used in the production of RCC shall conform to Division 5, Section 7 and the referenced standards with the following exceptions and/or additions:

- The design of the RCC mixture shall be the responsibility of the contractor and must be approved by the Engineer prior to execution of the work.
- The Petrographic Number for coarse aggregate used in RCC production shall not exceed 140.
- The nominal size of the coarse aggregate shall be 20 mm.
- For Normal strength designation, the RCC shall have a flexural strength of 5 MPa at 28 days.
- For High Performance designation, the RCC shall have a flexural strength of 6.5 MPa at 28 days.
- Type GU or GUL cement shall be used, and it must comply with CSA-A3000 standards.
- Low calcium Class F fly ash may be used at an addition rate not to exceed 25 percent by mass of total cementing material.
- Silica fume cement may be used at an addition rate not more than 10 percent by mass of total cementing material.
- The water-reducing or set-retarder admixture used to produce RCC shall conform to ASTM C494.
- The use of calcium chloride or admixtures containing chlorides is forbidden.
- The temperature of the concrete at point of discharge shall be 10°C to 27°C.

6.0 CONSTRUCTION METHODS

6.1 Equipment and Plant

6.1.1 Mixing Plant. The mixer unit shall be a stationary mixer of the twin shaft pugmill type or central concrete batch plant capable of producing a minimum output of 150 t/hr. Any other proposed alternative mixing equipment must be approved by the Engineer.

6.1.2 Aggregate Bins. Aggregate bins shall be provided for aggregate storage and shall be of sufficient capacity to provide a continuous supply to the mixer operating at full capacity.

The bins shall have the feed rate controlled by a variable speed belt, calibrated to accurately deliver any specified quantity of material within the required tolerance.

6.1.3 Water Control Units. Satisfactory means of incorporating either weighing, metering or volumetric measurements, shall be provided to obtain the required quantity of water in the RCC mix within the specified tolerances. A water storage tank shall be provided to prevent surge draw down effect.

6.1.4 Batching and Proportioning Tolerances. Batching or proportioning shall conform to the mixture proportions as directed, with the following tolerances:

Material	**Plant**
Cementitious materials	± 1 %
Aggregates	± 2 %
Water	± 1 %
Each Admixture	± 1 %

6.1.5 Calibration. Prior to commencement of RCC production, the Contractor shall carry out a complete and comprehensive calibration of the plant in accordance with the manufacturer's recommended procedures. The calibration will be witnessed and approved by the Engineer. All scales, containers and other items necessary to complete the calibration shall be provided by the Contractor. After completion of the initial calibration daily yield checks shall be carried out. A complete recalibration shall be carried out as and when directed by the Engineer.

6.1.6 Pavers. Pavers shall be of the self-propelled type, specifically designed for RCC paving. Pavers shall be equipped with dual tamping bars and high-density vibrating screeds capable of placing the RCC mix to at least 90% of the wet density obtained via ASTM D 1557 prior to additional compactive effort. The paver shall be of suitable mass and stability so as to spread and finish the concrete to the indicated thickness, smoothness and surface texture requirements. The paver shall produce a finished surface conforming to smoothness and surface tolerance requirements specified herein. The paver shall confine edges of lanes to true lines without use of stationary side forms and shall place the concrete to the required thickness free from segregation.

Each side of the paver shall be equipped with interchangeable side forms (shoes) which will form the edge of the pavement lane either vertically or 15 degrees from vertical. Pavers shall be designed to operate forward at variable speeds and in reverse. The paver shall automatically control both line and grade by means of electronic controls operating from stationary stringline or, as appropriate, short skis riding on a paved lane. Laser control devices may be used in lieu of a stringline provided the entire process is approved. Electronic controls shall be used to control grade on both sides of the paver.

6.1.7 Rollers

6.1.7.1 Vibratory Rollers. Vibratory rollers shall be self-propelled, doubled drummed, steel-wheeled vibratory rollers having an average operating weight of at least 2680 kg per lineal metre of drum. The rollers shall transmit a dynamic impact to the surface through the drums by means of revolving weights, eccentric shafts, or other equivalent methods. The roller shall have a vibrating frequency of at least 1500 cycles per minute. The amplitude shall be between 0.4 mm and 1.0 mm at the operating frequency used. Controls shall permit ready variation of the amplitude at a minimum of two settings over at least 50% of the above range. The roller drum shall be between 1200 and 1700 mm in diameter and 1600 to 2440 mm in width. The roller shall be operated at speeds not exceeding 2.4 km per hour. Within the range of the operational capability of the equipment, the Engineer may direct or allow variations with the specified range to the frequency, amplitude, and speed of operation which result in the required density and satisfactory surface texture at the fastest production rate. At least one self-propelled vibratory roller, in good operating condition and meeting these requirements, shall be used full time for each paver used full time. The roller shall be equipped with some means of keeping the drums damp during operation. Each drum shall be equipped with an operating scraper and pad. Any rollers which pick up material from the surface of the pavement shall be adjusted, modified, or replaced.

6.1.7.2 Rubber-Tired Roller. Rubber-tired rollers shall have smooth tires, non-oscillating wheels, tire pressure between 350 kPa and 620 kPa, with a total load between 1350 and 2000 kg per wheel. The roller shall have two axles with at least three wheels per axle, offset so that front and back tires do not track in the same path. At least one rubber-tired roller, in good operating condition and meeting these requirements, shall be used full time for each paver used full time. This roller is used after the required density has been obtained using a steel drummed vibratory roller to help remove surface cracks and tears and provide a smooth, tight surface.

6.1.8 Other Compaction Equipment. Light walk- behind, or similar sized vibratory rollers and mechanical tampers, shall be furnished for use in compaction areas inaccessible to the large rollers.

6.1.9 Haul Trucks. The trucks for hauling the RCC mix from the plant to the paver shall be of adequate size, speed and condition to ensure orderly and continuous operation and as follows:

- Boxes with tight metal bottoms.
- Covers of sufficient size and weight to completely cover and protect the RCC mix.

A truck may be rejected at any time during the project if its box is not clean to the satisfaction of the Engineer.

6.1.10 Other Equipment Requirements

6.1.10.1 Straightedge. One, 3 m straightedge shall be provided for each paving spreader for testing the finished surface. Straightedges shall have handles to facilitate movement on the pavement.

6.2 Placement

6.2.1 Preparation of the Subgrade and Granular Base/Subbase. Before RCC processing begins, the Contractor shall finalize the fine grade to ensure that the area is graded and shaped to the lines and grades shown in the Plans or as directed by the Engineer or their authorized representative. It is mandatory that any unsuitable soil or material shall be removed and replaced with acceptable material. The subgrade shall be uniformly compacted to a minimum of 100% standard proctor maximum dry density in accordance with ASTM D698. The Contractor shall verify for any soft or yielding subgrade areas by proof rolling with a loaded dump truck or pneumatic-tire roller over the entire area to be paved. All soft or yielding subgrade areas shall be corrected and made stable before RCC construction begins. If a granular base and/or subbase aggregate is shown on the Plans, it shall be uniformly compacted to a minimum of 100% standard proctor maximum dry density in accordance with ASTM D698 and placed in accordance to indicated thicknesses.

When granular base and/or subbase aggregate is required by the Plans, it shall be uniformly compacted to a minimum of 100% standard proctor maximum dry density in accordance with ASTM D698 and placed to the required thicknesses. Unless otherwise approved by the Engineer, moisture content of the material shall be within ±2% of its optimum moisture content as determined by the Standard Proctor Density test. The surface of the granular base / subbase shall be uniformly moist and free of foreign material, ponded water and frost at the time of RCC placement. If the addition of sprinkling water is required to maintain uniform moisture, the method of sprinkling shall not form mud or pools of free-standing water.

6.2.2 RCC Placing Conditions. All RCC shall be mixed, transported, placed and compacted within 60 minutes. The time limit may be increased or decreased, depending on ambient conditions of temperature and humidity as directed by the Engineer.

6.2.3 Weather Conditions.

6.2.3.1 Cold Weather Concreting. When the mean air temperature is at or below 5°C or when the temperature is likely to fall below 5°C within 24 hours, the Contractor shall place, cure and protect PCC in accordance with CSA 23.1 and this specification.

PCC shall not be placed on or against any surface which is at a temperature less than 5°C. Snow and ice shall be removed before PCC is deposited on any surface. Calcium chloride or other de-icing chemicals shall not be used as a deicing agent in the forms.

If the Department specifies heating of the mix water and/or aggregates, the charging cycle shall be altered to prevent flash setting of the PCC. Aggregates and water shall not be heated above 80°C. Water and/or aggregates heated to a temperature in excess of 40°C, shall be batched in the mixer first to reduce the temperature of the combination below 40°C, prior to the addition of the cementing materials. All frozen lumps of aggregate shall be excluded from the mix.

6.2.3.2 Hot Weather Concreting. When the air temperature is at or above 27°C or is likely to rise above 27°C within 24 hours, special measures, as detailed in CSA A23.1, shall be taken by the Contractor to protect the concrete from the effects of hot and/or drying weather conditions. The temperature of the formwork, reinforcing steel or the material on which the concrete is to be placed, shall not exceed 27°C.

Concrete temperatures shall not exceed those specified in CSA A23.1, Table 14.

6.2.3.3 Precipitation Limitations. No placement of RCC mixture is allowed during periods of precipitation unless otherwise approved by the Engineer.

6.2.3.4 Environmental Conditions. When a combination of daily maximum temperatures and wind conditions may lead to surface moisture loss exceeding 0.5 kg per m2 per hr. as defined by Annex D, CSA-A23.1, the RCC operations shall be discontinued until appropriate measures have been taken.

6.2.4 Spreading. The RCC mix shall be spread to a sufficient depth that will produce the specified thickness when compacted and conform to the required cross- section and grade. The paver shall be operated in a manner that will prevent segregation and produce a smooth continuous surface without tearing, pulling or shoving. The length of RCC spread shall be limited to that which can be compacted and finished within the appropriate time limit under the prevailing air temperature, wind and other climatic conditions.

6.2.5 Multi-pavers recommended. Where possible, more than one paver shall be used in staggered formation to produce multiple mats construction with minimum use of cold joints.

6.2.6 Placing Odd-shaped Areas. In isolated instances involving very small odd-shaped areas where use of machine spreading is impractical, RCC shall be spread by hand. Spreading shall be in a manner to prevent segregation. Mixture shall be spread uniformly with shovels in a loose layer of thickness that, when compacted, will conform to density, grade, thickness, and surface texture requirements.

6.2.7 Multi-lift Construction. Not more than 60 minutes shall elapse between placement of lifts on multi-lift construction.

A separate paver shall be required for each lift unless otherwise approved by the Engineer.

6.2.8 Water Control. Placing shall be done in a pattern so that curing water from previous placements will not pose a run-off problem on the fresh RCC surface or on the base course.

6.3 Compaction. RCC compaction shall be accomplished by self-propelled vibratory steel wheel rollers and rubber - tired rollers. Rolling shall be continued until a wet field density of not less than 98% of the reference wet density is attained. The reference wet density shall be established by ASTM D 1557.

A rolling pattern shall be established that will achieve the required density with a minimum number of roller passes. During vibratory compaction, the roller shall not start or stop in vibratory mode. The stopping point of successive rolling passes shall be staggered to avoid forming a depression on the surface.

In multiple mat construction, a 300 mm to 450 mm edge strip shall be left uncompacted until the adjacent mat is placed, at which time both sides of the fresh joint can be compacted simultaneously.

6.4 Joints

6.4.1 Fresh joint. A fresh joint is made when adjoining RCC mats are placed and compacted within 60 minutes of each other, with the time adjusted depending on ambient conditions.

6.4.2 Cold Joints. Any planned or unplanned construction joints in the RCC pavement that do not qualify as fresh joints shall be considered cold joints. In these cases, the edge of the previously placed RCC pavement shall be carefully cut back to expose an even, compacted, vertical surface of the full thickness of the course without disturbance of the RCC pavement that is to remain in place. This shall be done with an approved saw cutter or other approved equipment. Uneven areas and ravelling shall be corrected by hand operations. When necessary, the fresh RCC pavement mixture shall be hand finished at joints.

6.4.3 Vertical Control Joints. If specified in the RCC design, regularly spaced joints will be saw cut into the RCC to control the location of concrete shrinkage cracks.

6.4.4 Multi-lift Construction. The top layer shall be placed so that longitudinal joints in that layer will coincide with joints in the lower layers of the pavement. Transverse joints in the top layer shall coincide with transverse joints in the lower layers of pavement.

6.4.5 Rubberized Asphalt Sealant. When joint sealant is specified, it shall not be applied prior to 21 days of concrete curing. The joint sealing compound shall be melted uniformly and slowly while being stirred constantly in the heating kettle. The compound shall be heated until it can be drawn free flowing and lump free from the heating and mixing kettle at a temperature within the range specified by the Manufacturer of the compound. It shall be poured within the specified temperature range. Sufficient compound shall be poured into the joint so that, upon completion of the work,

the surface of the compound shall be 3 mm to 6 mm below that surface of the pavement. If the compound subsides to a level below that indicated above, a second pouring will be required. When more than one pouring is required to fill the joint, succeeding pours shall be made immediately. The sealant shall be prevented from flowing beyond the edge of the slab. Longitudinal joints shall be sealed immediately following the sealing of the transverse joints in the adjacent lane. Any material spilled or excess material in the joint shall be removed immediately and the pavement surface cleaned.

6.5 Curing

6.5.1 RCC without asphalt surfacing. When curing an RCC surface without asphalt surfacing, one of the following curing methods shall be used.

Water Cure. The RCC surface shall be kept continuously moist by the application of water by means approved by the Engineer for a minimum of seven days and until the RCC reaches the required flexural strength for the type of vehicle to be operating on the pavement.

The mist or spray shall not be applied in a channelized or pressurized manor that in any way erodes the surface of the RCC pavement. Water trucks shall not be allowed to drop oil or other contaminants on the surface. If trucks must leave the pavement, the tires shall be washed free of dirt or other foreign materials before returning to the pavement. The total weight of the trucks and design of the running gear shall be such that no cracking or other damage to the RCC pavement is caused.

Curing Compound. A specified membrane forming curing compound meeting ASTM C309 shall be applied in two applications at the manufacturers recommended rate of application. The section application shall be sprayed at 90 degrees to the first application. If the curing compound is not applied immediately after completion of compaction, the RCC surface must be moist cured until the curing compound is applied.

6.5.2 RCC with asphalt surface. Commencing immediately after rolling is complete, the surface of the RCC pavement shall be kept continuously moist by means approved by the Engineer until the RCC is at least 24 hours old. After the required initial water curing, the RCC pavement shall be cured using the asphalt emulsion RS-1. Water curing must be extended if there is a delay in spraying the emulsion on the surface.

Asphalt Emulsion RS-1 shall be applied at a rate of 0.5 kg to 1.0 kg per m2 as per Division 4, Section 1, Emulsified Asphalt.

Curing compounds shall not be used on RCC with an asphalt surface.

7.0 QUALITY CONTROL / QUALITY ASSURANCE

7.1 Quality Control. The Contractor shall take all control measures required to construct the concrete pavement in accordance with the specifications.

7.2 Quality Assurance. The quality assurance procedure of the Department shall not be used to replace or augment the quality control by the contractor.

7.3 Strength. The flexural test will be the standard test for assessing the strength of the concrete. CSA-A23.2 will be used as the test procedure, however, the specimens must be consolidated by impact hammers because of the low moisture content. Compressive strength tests or splitting tensile tests of cylinders may also be used to assess the suitability and uniformity of the concrete provided that a correlation has been established with flexural strength. Similar to the flexural specimens, these specimens must be consolidated by impact hammer to the maximum density specified based on the laboratory mixture. All specimens must be cast in rigid steel molds. The measured values and correlated flexural results must be reported.

The frequency of tests for compressive strength shall be one set of three cylinders per 100 m3 of concrete. The frequency of tests for flexural strength shall be as for the compressive strength. A flexural strength test is the average of the flexural strength of two beams tested at the same age.

The average compressive strength of all sets of three consecutive strength tests of cylinders, made and tested in accordance with CSA-A23.2-3C and CSA- A23.2-9C, shall not be less than that as previously defined.

7.4 Tolerances

7.4.1 Thickness. The Contractor shall verify by measurement and quantity calculation that the compacted thickness complies with the design. The owner may, at their own expense, extract cores to verify the thickness of the pavement. A thickness deficiency shall not exist if the average thickness of all cores meets or exceeds the design thickness and if no individual core is less than 90% of the design thickness.

7.4.2 Smoothness Testing. The finished asphalt surface will be tested as specified in the Special Provisions for the contract or the Standard Specification.

For exposed RCC surfaces the finished surface of the RCC, when tested with a 3-metre straight edge, shall not vary from the straight edge by more than 10 mm at any one point. The finished surface of the RCC after compaction and curing are completed shall be smooth and uniform free from excessive tears, ridges, cracks, segregation, spalls and loose material. The Engineer may approve a lower tolerance depending on the RCC job size and application**.**

7.5 Opening to Traffic. Completed portions of the RCC pavement may be opened to light traffic (occasional cars and pickup trucks) as soon as rolling is complete or final density is achieved and a curing compound has been applied. This generally means about 4 to 8 hours after final compaction or as approved by the Engineer or their authorized representative.

Completed portions of the RCC pavement may be opened to heavy traffic once the modulus of rupture reaches a minimum of 70% (3.5 MPa) of the required 28 days value (5 MPa). This generally means between 2 to 4 days after final compaction. Non-truck mounted curing equipment or saw-cutting equipment, necessary for proper construction and to meet other provisions of this specification, are allowable using techniques to prevent marring or displacing RCC surface aggregates.

For high performance RCC pavements requiring a flexural strength of 6.5 MPa at 28 days the opening to traffic strength will depend on the type and weight of the vehicle(s) operating on the RCC. This flexural strength value will be provided as part of the individual project tender.

8.0 METHOD OF MEASUREMENT

8.1 Roller Compacted Concrete. The quantity of RCC pavement shall be the area in square metres computed from the dimensions shown on the drawings or as revised by the Engineer.

9.0 BASIS OF PAYMENT

9.1 Roller Compacted Concrete. Payment for RCC will be at the tender bid price per square meter of concrete in place, to the lines and grades as specified by the Engineer. Payment shall be full compensation for the supply, handling, mixing, transportation, placing, compaction and curing of the RCC, and the supplying of all equipment, plant, labour, materials and incidentals necessary to complete the work. Payment for for RCC shall also include crackfilling of the asphalt surface.

9.2 Items such as roadway and drainage excavation, fine grading, granular materials, tack coat not used for curing purposes and asphalt concrete paving will be paid for separately at their contract unit prices.

10.0 WARRANTY

10.1 Initial Acceptance of the Work. Upon completion of the project, the Contractor and the Project Engineer shall within five days jointly evaluate the finished surface for initial acceptance. Upon acceptance, the Project Engineer will issue in writing to the Contractor initial acceptance of the work indicating the date of acceptance and will submit the final estimate to release payment for all work completed including hold back. A one-year maintenance period will begin on the RCC pavement from this date.

10.2 Maintenance. During this period, any failure in the final surface attributed to failure in the RCC, including but not limited to segregation, cracking, surface deformation delamination and debonding shall be repaired or reconstructed at the contractor's expense to the satisfaction of the Engineer. The cost of materials, haul and all other related work including traffic control required for repair or reconstruction of unacceptable areas shall be borne by the Contractor.

10.3 Final Acceptance. The Department or its representatives, and the Contractor will meet and inspect the finished surface one year after the date of initial acceptance of the work.

All areas that have failed as a result of the RCC pavement shall be repaired at the Contractor's expense at no cost to the Department. Based on the aforementioned regarding failure, if the Contractor and the Department do not agree on what areas are failed, the Department's decision shall be final.

The final acceptance of the original RCC surface by the Department shall relieve the Contractor from all maintenance responsibility with respect to the original RCC surface, however, the contractor shall be held responsible to maintain repaired areas for a period of 12 months after repairs are made.

10.4 Liability. During the period of construction and the one-year maintenance period the Contractor shall be responsible for processing any and all claims for property damage and/or bodily injury caused by the failure of the RCC surfacing including, but not limited to, motor vehicle or pedestrians. The Contractor shall be responsible for the payment of all property damage and bodily injury claims and agrees to save and hold harmless the Department from all such claims as set out in Division 1 Section 3 Subsection 47 of these specifications. Claims not handled by the Contractor or their representative efficiently or expediently will be settled by the Department and the costs recovered from the Contractor.

10.5 Security Deposit. Notwithstanding anything to the contrary, as stated in Division 1, Section 3 Subsection 8.0 of these specifications, the security deposit for this contract will be held and retained by the Minister until the maintenance period has expired. The security deposit will be held to ensure that sufficient funds will be available to the Department in the event of non- performance by the Contractor. The Contractor is responsible for all costs including the materials and haul and for the repair of all failures and damages resulting from negligence or faulty workmanship by the Contractor that adversely affects the integrity of the RCC which occurs, and is evident prior to, the expiration of the one-year maintenance period. The amount of security deposit shall be 10% of the tender value or as specified in the Special Provisions.

SECTION 19 - ASPHALT CONCRETE END PRODUCT SPECIFICATION (EPS)

1.0 DESCRIPTION

This item consists of supplying crushed aggregates, blending materials, anti-stripping agent, asphalt binder, production, loading, hauling, placing and compaction of hot mix asphalt concrete, including asphalt concrete patching. The limits of placement, application rates and the asphalt concrete mixture type shall be as stated in the contract specifications. Areas constructed will be subjected to various quality assurance testing.

It shall be the Contractor's responsibility to provide an acceptable product as specified. In order to achieve this, the Contractor shall implement and maintain a quality control system that will provide assurance that all components, as well as end result products, submitted to the Department for acceptance, conform to the contract requirements. This is without regard to whether the products are manufactured by the Contractor or purchased from suppliers or subcontractors.

Quality assurance tests shall be performed, by the Department, on random samples taken either at the production site or laydown site.

1.1 DEFINITIONS

1.1.1 End Product Specification (EPS). An end product specification is a specification under which the Department monitors the Contractor's control of the processes that produce the items of construction. The Department accepts or rejects the end product according to a specified quality assurance plan. The Contractor is entirely responsible for quality control. End product acceptance is the responsibility of the Department including a statistically oriented program of quality assurance testing.

1.1.1.1 Work Category. The work will be classified as Work Category 1, Work Category 2, Work Category 3 or Work Category 4. The category defined will apply to all asphalt concrete produced. The categories are determined by the Department based on the total estimated tonnage of the Work as follows.

Work Category	Total Estimated Tonnage
Work Category 1	Greater than or equal to 6000 tonne
Work Category 2	Greater than or equal to 3000 tonne and less than 6000 tonne
Work Category 3	Less than 3000 tonne
Work Category 4	As per the Contract Documents

1.1.2 Design Mix Formula (DMF). The DMF is defined as the laboratory determination of the precise proportions of asphalt binder, additives and aggregates to be blended together to meet the specified properties for a given asphalt concrete mix.

1.1.3 Job Mix Formula (JMF). The JMF is the resultant establishment of the single definite percentage for each sieve fraction of aggregate and asphalt binder content that will produce the desired asphalt concrete mix properties under field conditions.

1.1.4 Actual Asphalt Binder Content. This is the percentage of asphalt binder in the asphalt concrete mixture, determined from quality assurance testing in accordance with ASTM D6307.

1.1.5 Lot. For each mixture type specified, a Lot is defined as the quantity of asphalt concrete plant production, where approved changes to the Job Mix Formula have not occurred. The total quantity of asphalt concrete plant production in a Lot will be defined by the Work Category as Work Category 1, Work Category 2, Work Category 3 or Work Category 4, described in the following sections.

For all Work Categories, a separate Lot will be established at the discretion of the Engineer if conditions of construction indicate that it is likely that a portion of the Lot production is significantly different from the remainder of the Lot production.

1.1.5.1 Work Category 1. Under Work Category 1, a Lot will be defined as 2400 tonne. For loose samples, the Lot will be divided into 4 (four) approximately equal segments of 600 tonne, with one (1) sample taken from each segment. For core samples, the Lot will be divided into five (5) approximately equal segments, with one core sample taken from each segment.

If it is the last time the mix is produced and this criterion cannot be met (i.e. less than 2400 tonnes of mix remain), the following shall apply:

- If the remaining plant production is 600 tonnes or less, 1 (one) random loose sample will be obtained and the production will be added to the previous lot. 5 (five) random core samples will be obtained from the new Lot tonnage.
- If the remaining plant production is between 600 and 1200 tonnes, 2 (two) random loose samples will be obtained (one per each 600 tonnes) and the production will be added to the previous Lot. 5 (five) random core samples will be obtained from the new Lot tonnage.
- If the plant production is greater than 1200 tonnes, but less than 2400 tonnes, 4 (four) random loose samples will be obtained and the production will be designated as a separate Lot. 5 (five) random core samples will be obtained from this Lot.

1.1.5.2 Work Category 2. Under Work Category 2, a Lot will be defined as 1500 tonne. For loose samples, each Lot shall be divided into three (3) approximately equal segments and one loose sample is taken from each segment. For core samples, each Lot shall be divided into five (5) approximately equal segments and one core sample is taken from each segment.

If it is the last time that the mix is produced and this criterion cannot be met (i.e. less than 1500 tonne of mix remain) then the following shall apply:

- If the remaining plant production is 750 tonne or less, one (1) random loose sample will be obtained and the production added to the previous Lot. Five (5) random core samples will be obtained from the new Lot tonnage.
- If the remaining plant production is greater than 750 tonne but less than 1500 tonne, three (3) random loose samples will be obtained and the production will be designated as a separate Lot. Five (5) random core samples will be obtained from this Lot.

1.1.5.3 Work Category 3. Under Work Category 3, a Lot will be defined as 1500 tonne. For loose samples, each Lot shall be divided into three (3) approximately equal segments and one loose sample is taken from each segment. For core samples, each Lot shall be divided into three (3) approximately equal segments and one core sample is taken from each segment.

If it is the last time that the mix is produced and this criterion cannot be met (i.e. less than 1500 tonne of mix remain) then the following shall apply:

- If the remaining plant production is 750 tonne or less, one (1) random loose sample will be obtained and the production added to the previous Lot. Three (3) random core samples will be obtained from the new Lot tonnage.
- If the remaining plant production is greater than 750 tonne but less than 1500 tonne, three (3) random loose samples will be obtained and the production will be designated as a separate Lot. Three (3) random core samples will be obtained from this Lot.

1.1.5.4 Work Category 4. Under Work Category 4, a Lot is defined as one (1) day of plant production. For loose samples, each Lot will be divided into two (2) approximately equal segments with a loose sample taken from each segment. No core samples shall be obtained for the Lot.

1.1.6 Stratified Random Sample. A stratified random sample is defined as a representative sample taken in an unbiased manner, by dividing a Lot into approximately equal segments. A random sample is taken from each area or segment.

1.1.7 Sample Mean. This is the arithmetic mean of the group of test results derived from the randomly selected samples.

1.1.8 Mean of the Deviations. This is the sum of the absolute values of the deviations divided by the number of tests in the Lot.

1.1.9 Thickness. Thickness is defined as the specified application rate indicated in the contract documents divided by the average bulk relative density obtained from the core samples for a given Lot.

1.1.10 Mix Property. Mix properties measured for product acceptance and price adjustments are as follows:

- Gradation: p5000, p80, Asphalt Binder Content, Thickness, Density and Smoothness**.**

1.1.11 Referee Sample. A referee sample is defined as the portion of the loose sample that is set aside by the Department representative's laboratory in the case of an appeal of Lot binder content and/or gradation by the Contractor.

2.0 REFERENCES

All reference standards shall be current issue or latest revision at the first date of tender advertisement. This specification refers to the following standards, specifications or publications:

- Division 4 Section 1, Emulsified Asphalt
- Division 4 Section 2, PGAB
- Division 4 Section 4, Asphalt Concrete Hot Mixed-Hot Placed - 4.3 Anti-Stripping Agents
- Occupational Health and Safety Act
- Environmental Protection Act
- 1981 Asphalt Paving Plant Regulations
- AASHTO M 156, Requirements for Mixing Plants for Hot-Mixed, Hot Laid Bituminous Paving Mix
- AASHTO T 283, Resistance of Compacted Bituminous Mix to Moisture Induced Damage
- AASHTO TP 33, Test Method for Uncompacted Void Content of Fine Aggregate, Method A
- ASTM C 88, Test Method for Soundness of Aggregates by use of Sodium Sulfate or Magnesium Sulfate
- ASTM C 117, Test Method for Material Finer Than 75µm (No. 200) Sieve in Mineral Aggregates by Washing
- ASTM C 127, Test Method for Specific Gravity and Absorption of Coarse Aggregate
- ASTM C 128, Test Method for Specific Gravity and Absorption of Fine Aggregate
- ASTM C 131, Test Method for Resistance to Degradation of Small-Size Coarse Aggregate by Abrasion and Impact in the Los Angeles Machine
- ASTM C 136, Method for Sieve Analysis of Fine and Coarse Aggregates
- ASTM C 207, Specification for Hydrated Lime
- ASTM D 75, Practices for Sampling Aggregates
- ASTM D 140, Practice for Sampling Bituminous Materials
- ASTM D 2041, Test Method for Theoretical Maximum Specific Gravity and Density of Bituminous Paving Mixes
- ASTM D 2172, Test Method for Quantitative Extraction of Bitumen From Bituminous Paving Mixes
- ASTM D 2419, Test Method for Sand Equivalent Value of Soils and Fine Aggregate
- ASTM D 2726, Test Method for Bulk Specific Gravity of Compacted Bituminous Mixes Using Saturated Surface-Dry Specimens
- ASTM D 2950, Test Method for Density of Bituminous Concrete in Place by Nuclear Method
- ASTM D 3203, Standard Test Method for Air Voids in Compacted Bituminous Paving Mixes
- ASTM D 3549, Test Method for Thickness or Height of Compacted Bituminous Paving Mix Specimens
- ASTM D 3665, Practice for Random Sampling of Construction Materials
- ASTM D 4791, Flat Particles, Elongated Particles, or Flat and Elongated Particles in Coarse Aggregate
- ASTM D 5361, Practice for Sampling Compacted Bituminous Mixes for Laboratory Testing
- ASTM D 5444, Test Method for Mechanical Size Analysis of Extracted Aggregate

- ASTM D 6307, Test Method for Asphalt Content of Hot-Mix by Ignition Method
- ASTM D 6926, Standard Practice for Preparation of Bituminous Specimens Using Marshall Apparatus
- ASTM D 6927, Standard Test Method for Marshall Stability and Flow for Bituminous Mixtures
- ASTM D 7113, Standard Test Method for Density of Bituminous Paving Mixtures In Place by the Electromagnetic Surface Contact Methods
- ASTM E 178, Standard Practice for Dealing with Outlying Observations
- TPW TM-2, Test Method for Modified Petrographic Analysis
- TPW TM-3, Test Method for Percent Fractured Particles in Processed Coarse Aggregate
- TPW TM-4, Test Method for Moisture in Asphalt Mixes
- TPW TM-5, Test Method for Obtaining Loose Asphalt Concrete Mix Samples

3.0 SUBMISSIONS AND DESIGN REQUIREMENTS

3.1 Establishing a Design Mix Formula (DMF). Preparation and submission of the asphalt DMF for the Department's approval is the responsibility of the Contractor. The Contractor shall use professional engineering services and a qualified testing laboratory, to assess the aggregate materials proposed for use and to carry out the design of the asphalt concrete mix.

3.1.1 Requirements for Design Mix Formula. The asphalt mix design shall follow the Marshall method of the DMF as outlined in the latest edition of the Asphalt Institute Manual Series No. 2 (MS-2). The mix design, at the design asphalt binder content, shall meet the requirements in Table 1 for each asphalt concrete mix specified.

3.1.2 Submission of Design Mix Formula. The Contractor's submission shall include the following information/materials:

- The specific gravity and the percentage by mass of each aggregate (including natural sand, lime) to be used in the mix.
- The mix design gradation of the combined aggregate (including natural sand, lime).
- Physical properties of the aggregates specified, in accordance with Table 1.
- All Marshall mix design characteristics, including graphs used in arriving at the final mix design, the bulk relative density of the combined aggregates, and the asphalt absorption of the combined aggregates.
- Pit identification consisting of its name, name of owner, public highway from which it is accessed.

3.1.3 Evaluation of Design Mix Formula. The Engineer will require up to two (2) working days from the time of receipt of the DMF, for evaluation by the Department representative's laboratory. The Engineer will advise the Contractor of the acceptability. If the DMF does not meet the requirements of Table 1, it shall be rejected. The Engineer shall provide a written explanation to the Contractor that details why the DMF failed. The Contractor shall then provide another complete DMF in accordance with 3.1.1 Requirements for Design Mix Formula, and re-submit it to the Engineer for evaluation. Each time a DMF is re-submitted, an additional two (2) working days, from the time of receipt of the revised DMF, shall be required for evaluation by the Department representative's laboratory.

The Contractor's Design Mix Formula shall be accompanied with the appropriate mix materials. Such materials shall be delivered by the Contractor to the Consultant retained by the Department for verification testing. Samples required in order to calibrate the ignition oven are 18 kg of each coarse aggregate, 18 kg of each fine aggregate, 6 kg of natural sand, if necessary, and 2 liters/mix of PGAB.

The Engineer will not accept any asphalt concrete mix produced prior to the Contractor receiving written approval of the DMF from the Engineer.

3.2 Establishing a Job Mix Formula (JMF). The Contractor shall establish a JMF for each mix type by placing a specified quantity of trial mix (asphalt concrete) at a location designated by the Engineer. The maximum allotted quantity of asphalt concrete allowed for establishment of the JMF is defined by the Work Category as per the following:

Work Category	Lift	
	Base	Surface
1	600	300
2	500	250
3	500	250
4	Not Applicable	One Day Plant Production

Alternatively, the Contractor may elect to waive their trial mix option and submit their JMF (and supporting documentation) directly to the Engineer for approval.

At the discretion of the Engineer, the Contractor may be permitted to carry over any unused portion of the base course allotment to supplement the surface course allotment.

The asphalt concrete placed in the trial sections will be tested to determine if it meets the requirements of Table 1, however, unit price adjustments and repair/replace/reject criteria will be applied to the Thickness and Density properties. The asphalt concrete shall be assessed for surface defects in accordance with 5.7 Surface Defects.

3.2.1 Approval of Job Mix Formula. The Contractor shall submit the JMF in writing to the Engineer for approval. The Contractor's submission shall include the following information:

- The percentage by mass of each aggregate (including natural sand, lime) to be used in the mix
- The JMF target asphalt binder content and gradation
- The % Air Voids, VMA and VFA from the trial mix
- A minimum of three (3) sets of QC results

Mix Property	Limits for Mix Type	
	A, B, B-HF	C, C-HF, D, D-HF, E
P5000	± 6.00%	± 5.00%
P80	± 0.80%	± 0.50%
% AC	± 0.40%	± 0.30%

Failure to meet the above criteria shall be cause for rejection of the JMF and shall require the Contractor to resubmit either a new JMF or a revised DMF in accordance with 3.1.1 Requirements for Design Mix Formula.

The Engineer's written approval of the JMF will allow the Contractor to start/continue production.

3.2.2 Field Adjustments to the Job Mix Formula. A field adjustment to the JMF is defined as a change in the target gradation and/or asphalt binder content of a mix, within specified limits, without a redesign of the mix.

The Contractor shall request JMF changes in writing, including supporting test results (a minimum of 3 sets of QC results as per 3.2.1 Approval of Job Mix Formula). Field adjustments to the JMF shall be within the limits described in 3.2.1. Approval of the Job Mix Formula when compared to the DMF. Upon approval by the Engineer, revisions to the JMF will be applied to subsequent Lots only.

For each mix type on the contract, the maximum allowable number of field adjustments to the JMF for gradation and asphalt binder content parameters, shall be based on the following:

Tender Quantity for Specified Mix (tonnes)	Maximum Number of JMF Changes per Parameter
0 - 10000	2
10000 - 15000	3
15000 - 20000	4
20000 - 25000	5
25000 - 30000	6

The Contractor shall submit a revised DMF in accordance with 3.1.1 Requirements for Design Mix Formula, for the following changes:

- A change in the source of the aggregate used in the asphalt concrete mix.
- A change in material (different aggregate sizes) from the same source.
- A change in the source of the liquid anti-strip additive used in the asphalt concrete mix.

The submission of a revised DMF is not required for a change in the source of the asphalt binder. However, documentation from the Contractor identifying the change is required.

4.0 MATERIALS

4.1 Performance Graded Asphalt Binder (PGAB). PGAB shall be supplied by the Contractor, in accordance with the Standard Specification Division 4, Section 2. Specific PGAB grade requirements will be denoted in the contract specifications.

Within 7 (seven) calendar days prior to the first use of PGAB products, the Contractor shall supply to the Engineer, a Quality Control Plan detailing the quality control activities related to the use of PGAB.

4.2 Coarse Aggregate. Coarse aggregate supplied by the Contractor shall be made from a quarried source and shall conform to the requirements stated in Table 1. Coarse aggregate shall be the portion retained on the 5 000 sieve, free from coatings of clay, silt or other deleterious material.

4.3 Fine Aggregate. Fine aggregate supplied by the Contractor shall be produced from a quarried source or in the case of a natural deposit, fine aggregate may be manufactured from the aggregate held on the 10 000 sieve. In such cases, a tolerance of 10% passing the 10 000 sieve, based on a washed sieve analysis, will be permitted. Fine aggregate shall be the portion passing the 5000 sieve and shall meet the physical requirements of Table 1.

4.4 Natural Sand. If required, natural sand shall be supplied by the Contractor. Natural sand shall be used to obtain acceptable physical mix properties as outlined in Table 1. The maximum amount of natural uncrushed fine aggregate, used shall be limited to 15% of the total aggregate in all mix types.

4.5 Blending of Coarse Aggregates. Blending of coarse aggregates from two sources will only be permitted when the Petrographic Number (PN) for the aggregate from the original (primary) source does not exceed the specified PN by more than 10%. The PN of the aggregate from the secondary (blending) source shall not exceed the specified PN limit. The PN of the combined sources shall not exceed the specified PN limit.

The minimum amount of secondary (blending) coarse aggregate shall be at least 10% of the stone fraction. Coarse aggregates shall be blended through the cold feed bins (i.e. coarse aggregates from different sources shall be introduced into the mix through individual cold feed bins).

Sand from the original source may be used, provided the stone from which the sand is produced has a PN not more than 10% higher than the specified PN.

TABLE 1 - Asphalt Concrete Mix Requirements

Sieve Designation	**A**	**B**	**B-HF**	**C**	**C-HF**	**D**	**D-HF**	**E**
	% (by mass) Passing Each Sieve							
40 000	100	-	-	-	-	-	-	-
28 000	95-100	100	100	-	-	-	-	-
20 000	-	95-100	95-100	100	100	-	-	100
14 000	60-80	-	70-90	95-100	95-100	100	100	85-100
10 000	-	60-80	60-75	-	-	95-100	95-100	-
5 000	25-60	35-65	35-58	45-70	45-68	55-70	52-75	65-80
2 500	15-45	20-50	25-45	25-55	25-55	25-55	25-55	50-65
315	3-18	3-20	3-20	5-20	5-20	6-25	5-20	18-30
80	1-7	2-8	2-6.5	2-9	2-6.5	2-10	2-7	5-15
Physical Requirements for Asphalt Concrete	**A**	**B**	**B-HF**	**C**	**C-HF**	**D**	**D-HF**	**E**
Marshall Stability kN (min)	7.5							
No. of Blows	75							
Air Voids % (1)	3.5-4.5							
VMA % (min)	12	13	13	14	14	15	15	15
Voids Filled with Asphalt %	65-78							
Marshall Flow, mm	2-4							
Stripping Test, % (min)	73							
Physical Requirements for Coarse Aggregate	**A**	**B**	**B-HF**	**C**	**C-HF**	**D**	**D-HF**	**E**
Los Angeles Abrasion, % (max)	30							
Soundness, % (max)	15							
Petrographic No. (max)	135(2)							180(2)
Flat & Elongated Particles, % (max)	10							
Fractured Particles, Two fractured faces, % by mass (min)	95(3)							40
Absorption % (max)	1.75							
Physical Requirements for Fine Aggregate	**A**	**B**	**B-HF**	**C**	**C-HF**	**D**	**D-HF**	**E**
Absorption, % (max)	2							
Soundness, %(max)	10							
Fine Aggregate Angularity, % (min)	45							
Sand Equivalent, % (min)	50							

(1) During mix production, Air Void requirement is 3.0 - 5.0 %.
(2) A higher Petrographic Number is permissible based on the AADT as described in Table 4.4.3 of Division 4 Section 4
(3) A lower percentage of Fractured Particles is permissible based on the AADT as described in Table 4.4.3 of Division 4 Section 4

4.6 Production of Aggregates. The Contractor is permitted to use asphalt concrete aggregates produced prior to award of the Contract, provided that the following conditions have been met:

- Written notification of the intent to commence aggregate production operations had been received by the Department at least five (5) working days prior to production start up. Notification must also have included a physical description of the pit or quarry; approximate tonnage of each aggregate size to be produced; as well as the anticipated schedule for aggregate production.

- Quality Control (QC) testing has been carried out in accordance with the Department's Standard Specification, Division 4 Section 19 - Asphalt Concrete End Product Specification (EPS) at the minimum sampling/testing frequencies as set out in Table 2 (Series A - Aggregate Characteristics and Series B - Aggregate Production).
- The Contractor has maintained all QC records and documentation and provided copies of all QC test results to the Department's Highway Construction Services Division, on a daily basis, within 24 hours of sampling/testing.
- The Contractor has granted the Department's representative full access to production and storage sites at all times during production, allowing for the performance of any and all quality assurance (QA) testing and inspection deemed appropriate by the Department.
- Proper aggregate stockpiling procedures have been followed and stockpiles have been adequately maintained and protected from contamination and segregation.

The QC results received by Highway Construction Services will be forwarded to the Engineer upon award of Contract. Acceptance of aggregate production test results does not, in any way, relieve Contractors of their responsibility to produce an asphalt concrete mix that meets the Specification.

The Contractor's Inspection Testing Plan (ITP), shall reference the aggregate QC testing carried out prior to award of Contract. Any additional aggregates required shall be produced in accordance with 6.0 - Quality Control/Quality Assurance.

4.7 Anti-Stripping Agents. If the Contractor elects to use anti-stripping agents, the incorporation of such products into the asphalt concrete mix shall be done as specified throughout Division 4 Section 4 - Asphalt Concrete Hot Mixed - Hot Placed.

5.0 CONSTRUCTION METHODS

5.1 General. Equipment shall be designed and operated to produce an end product complying with the requirements of this specification. Equipment used shall be of adequate rated capacity and shall be in good working order.

5.2 Production. The asphalt mixing plant and its components shall meet the requirements of AASHTO M 156 and the latest edition of the Standard Specification.

It is the joint responsibility of the paving Contractor and trucker to load the proper amount of asphalt concrete hot mix into each truck. Any excess amount that shall be removed is the joint responsibility of the paving Contractor and the trucker. The removal of the excess material shall be accomplished in a manner that is consistent with the Occupational Health and Safety Act and also shall not impact on the integrity, or promote segregation, of the hot mix material.

Asphalt concrete exceeding a temperature of 165^0C at any point of the operation shall be cause for rejection.

5.3 Transportation. Asphalt concrete shall be transported from the paving plant to the work site in trucks that are properly equipped and in good working order.

The use of hydrocarbon fuels or solvents to lubricate the truck bodies or to clean tools or equipment, will not be permitted. A biodegradable release agent shall be supplied by the Contractor to clean or lubricate tools, equipment and truck bodies.

The Contractor shall not place asphalt concrete during rain, or when the surface is frozen, nor when the pavement surface shows signs of free-standing water or when the ambient temperature is below 5^0C.

5.4. Placement. Asphalt concrete shall be placed upon a prepared surface which is free from standing water and free of any loose or foreign material. The asphalt concrete shall be spread by a mechanical self-powered paver capable of achieving the specified grade, line and crown.

Placement of asphalt concrete shall only be conducted during daylight hours, unless specifically noted otherwise in the contract specifications.

Contact edges of existing mats and contact faces of curbs, gutters, manholes, sidewalks and bridge structures shall be coated with a thin film of tack before placing the asphalt concrete.

Failed areas in existing surfaces (paved or gravel) shall be repaired, as directed by the Engineer. Areas requiring repair will be identified by the Engineer in consultation with the Contractor. Irregularities in the horizontal alignment and grade

along the outside edge of the asphalt concrete shall be corrected by the addition or removal of mix before the edge is rolled. Paving of intersections, extra widths and other variations from standard lane alignment and as defined in the contract, whether by hand spreading or machine laying, shall be carried out concurrently with the machine laying operation of the regular mat, unless otherwise approved by the Engineer.

Fuel spills from the Contractor's equipment shall be immediately repaired by the Contractor to the satisfaction of the Engineer.

5.4.1 Material Transfer Device. The Contractor has the option to utilize a Material Transfer Vehicle (MTV). The Contractor will be paid an additional $1.50 per tonne for all non-segregated, uniformly textured, smooth asphalt concrete applied using an approved MTV. The MTV is defined as a self-propelled transfer unit and (paver) insert hopper. The MTV must transfer hot asphalt concrete from an unloading truck and re-mix the material prior to lay-down, without direct contact with the paver.

Areas subject to repairs as a result of segregation, non-uniform texture or roughness will not be eligible for the $1.50 per tonne premium. Repairs, if required, shall extend the full width of the lane and the full depth of the lift in which the repair work is performed.

Material Transfer Vehicles that are not approved by the Department will not be eligible for the $1.50 per tonne premium.

Contractors are advised that MTVs must be evaluated and approved by the Department or its representative prior to becoming eligible for the premium. Contractors wishing to have particular MTV units evaluated shall make a written request to the Department's Highway Construction Services Division. Contractors shall work co-operatively with the Department's evaluator(s) in establishing mutually agreed upon test conditions and variables. Once the Department has been satisfied that a proper evaluation has been completed, Contractors shall be notified, in writing regarding the eligibility of the particular MTV for the premium.

5.5 Joint Construction. All joints shall be constructed to ensure a dense, well-bonded, continuous seal and to provide a smooth riding surface.

5.5.1 Transverse Construction Joints. Transverse joints shall be butt joints constructed at the end of each day's work and at other times when paving is halted for a period of time which results in the asphalt concrete cooling to below 120°C. When paving resumes, temporary tapers or ramps from previously placed asphalt concrete shall be cut back to full mat thickness to expose fresh, straight vertical surfaces. Loose or broken material shall be removed and surfaces tacked, at the Contractors expense, in accordance with the latest edition of the Standard Specification.

5.5.2 Longitudinal Construction Joints. Longitudinal joints in the top lift shall not be constructed within a travel lane except when paving in echelon or when paving tapers. Base course mats may have joints located within the lane, but not in the wheel path. Joints in succeeding lifts shall be offset a minimum of 150 mm to 300 mm for 100 Series Highways. Joint offset for all other classes of road shall be a minimum of 150 mm.

5.5.2.1 Paving in Echelon. Where described in the contract specifications, pavers shall be used in echelon to lay the mat full width. Upon completion of each day's paving, the maximum length of exposed joint edge shall be 100 meters.

5.5.2.2 Conventional Paving. Prior to placing the adjacent mat, the exposed edge of each longitudinal joint must be coated with emulsified asphalt (tack coat). Upon completion of each day's paving, the maximum length of exposed joint edge shall be 100 meters.

5.5.3 Keyed Joints. When overlaying existing asphalt concrete pavement, keyed joints shall be constructed at both ends of the project, at all intersecting roads, ramps and at all bridge decks in the repaving area, as per the latest edition of the Standard Specification - Division 4, Section 4 (also see Drawing S-2009-013 Section 8). Keyed joints will only be required between the final lift of pavement and the existing pavement, unless otherwise directed by the Engineer.
When existing pavement has been removed in advance of paving the joint area, the Contractor shall construct a temporary (hot mix asphalt concrete ramp) taper at the joint area to a slope of at least 50 horizontal to 1 vertical (50H:1V), as per the latest edition of the Standard Specification - Division 4, Section 4 (also see Drawing S-2009-013 Section 8). Temporary tapers (ramps) shall be installed immediately following milling of the keyed joint and prior to opening the area to traffic.

5.6 Compaction. Compaction equipment shall consist of at least one of each of the following:

- Vibratory roller
- Pneumatic-tired roller
- Finish roller

Along curbs, manholes and similar structures and locations not accessible to full size rollers, the mix shall be compacted with smaller compaction equipment, such as vibrating plate tampers, or by hand tampers.

5.7 Surface Defects. The finished surface of any pavement course shall have a uniform texture and be free of visible signs of defects. The Engineer will identify any obvious defects and determine remedial requirements, which may include removal and replacement in accordance with 6.5.1 Removal and Replacement. Such defects shall include, but not necessarily be limited to, the following:

- Segregated areas;
- Areas of excess or insufficient asphalt binder;
- Roller marks, tire marks;
- Cracking or tearing;
- Improper matching of longitudinal and transverse joints;
- Sampling locations not properly reinstated;
- Improper cross slope;
- Fuel spills on the mat;
- Deleterious materials.

6.0 QUALITY CONTROL / QUALITY ASSURANCE

6.1 Quality Control. The Contractor shall be totally responsible for quality control testing in accordance with Table 2, throughout every stage of the work from the crushing and production of aggregates to final product acceptance, to ensure materials and workmanship comply with the requirements of this specification. At no time, will the Engineer issue instructions to the Contractor as to setting of dials, gauges, scales and meters. However, the Engineer may advise the Contractor against the continuance of any operations or sequences of operations which will result in non-compliance with specification requirements.
The Contractor shall also be responsible for Quality Control testing of asphalt concrete patching mix used within the limits of the Contract. Asphalt concrete patching mix shall not be considered as part of a Lot, however, QC records and documentation shall be made available in accordance with 6.1.2 Sampling and Test Results.

6.1.1 Quality Control Inspection Testing Plan (ITP). Following award of Contract, and at least 10 (ten) working days prior to commencement of asphalt concrete aggregate production, the Contractor shall submit, in writing to the Engineer, an ITP covering all phases of the contract performance, including the name of the party retained to prepare the ITP.

The ITP shall include, but not be limited to, identification and description of inspection and required test procedures to be used to fulfill the conditions of the Contract. The ITP shall be sufficiently comprehensive and detailed to assure the Engineer of the Contractor's willingness and ability to control the construction production and processes. Once accepted by the Engineer the plan becomes a part of the Contract and shall be enforced accordingly.

If the Contractor elects to take loose samples from the roadway, the ITP shall describe the sampling procedure in sufficient detail to ensure that a minimum area is affected. The method used to reinstate the sample area must be outlined such that the resulting mix is uniform, non-segregated, and well compacted. Test methods, sampling and minimum frequency of testing are shown in Table 2.

The Engineer will provide written approval of the ITP within 5 (five) working days of receiving the same. The Contractor may be required to update and resubmit the ITP to the Engineer for approval, as conditions warrant.

6.1.2 Sampling and Test Results. Where specified, random sampling procedures shall be followed, and where no specific random sampling procedure is specified, the sampling procedure shall be as identified by the Contractor in the ITP. The Contractor shall be responsible for the interpretation of the test results and the determination of any action to be taken to ensure that all materials and work conform to the requirements of the Contract.

The Contractor shall maintain all QC records and documentation. Results of all QC testing carried out in accordance with Table 2 shall be provided to the Engineer within 24 hours of sampling. All QC documentation shall also be made

available for inspection by other Department personnel at all times during the course of the Contract.

At the end of the construction season, and no later than January 31 of the following year, the Contractor shall provide the Engineer with a final report detailing all quality control test data. The report shall be provided on an acceptable electronic media storage device (in MS Excel format). A copy shall also be provided to the Department's Highway Construction Services Division, Miller Lake.

6.2 Quality Assurance. Quality assurance (QA) is the responsibility of the Department. In addition to QA testing used to determine unit price adjustments, the Department may, at its sole discretion, examine, inspect or test any aspect of the Contractor's work as deemed appropriate. Such inspections and testing shall not relieve the Contractor of their responsibilities for quality control.

6.2.1 Sampling. Random sample locations (loose samples and core samples) for QA testing shall be generated by the Engineer for each Lot and trial mix. For the trial mix, a minimum of 1 (one) random loose sample shall be taken for QA testing (i.e. for determination of maximum theoretical density).

All QA samples shall be taken and labeled by the Contractor in the presence of the Engineer (or designated representative). Cores damaged during sampling or handling shall be discarded and new samples shall be taken immediately adjacent (within 0.3 meters) to the original sample location. The Engineer (or designated representative) will be responsible for transporting the samples to the Department representative's laboratory.

Neither loose nor core samples will be taken from small areas such as tapers, aprons, bridge approaches, areas of handwork, gores, and asphalt mix used for isolated leveling and repair of failed areas, however, the tonnage contained therein will be included in the Lot.
Random samples will not be taken in areas of obvious surface defects as indicated in 5.7 Surface Defects. These areas will be marked and repaired in accordance with 6.5.1 Removal and Replacement.

6.2.2 Sample Testing. Unless otherwise specified, QA samples will be tested in accordance with the latest edition of the test methods outlined in Table 3.

6.2.3 Asphalt Binder Content and Gradation. The asphalt concrete mix shall be sampled using the procedure as outlined in TPW - TM5 (revised 2005). The number of loose samples per Lot shall be as defined in 1.1.5 Lot. The sample location shall be selected as follows:

Under Work Categories 1 through 3, a random tonnage sample will be determined by the Engineer. The Engineer will provide the Contractor with approximately two hours advance notice of loose sampling requirements, based on projected tonnage/production rates.

Table 2 - Quality Control Testing Requirements

Series	Tests	Standard	Minimum Frequency
A	**Aggregate Characteristics**		
	1. Sampling	ASTM D 75	
	2. Sieve Analysis	ASTM C 117, C 136	Preliminary Testing & Series B
	3. Soundness ($NaSO_4$)	ASTM C 88	Preliminary Aggregate Tests
	4. Los Angeles Abrasion	ASTM C 131	Preliminary Aggregate Tests
	5. Petrographic No.	TPW - TM2	Preliminary Aggregate Tests
	6. Flat & Elongated Particles (4:1)	ASTM D 4791	Preliminary Testing & Series B
	7. Specific Gravity and Absorption, Coarse Aggregate	ASTM C 127	Preliminary Aggregate Tests
	8. Specific Gravity and Absorption, Fine Aggregate	ASTM C 128 (1)	Preliminary Aggregate Tests
	9. Fine Aggregate Angularity	AASHTO TP 33 (A)	Preliminary Testing & Series B
	10. Sand Equivalent	ASTM D 2419	Preliminary Testing & Series B
	11. Fractured Particles	TPW - TM3	Preliminary Testing & Series B
	12. Stripping Test	AASHTO T283 (**visual by TIR)**	Preliminary Aggregate Tests (mix design)
	13. Absorption	ASTM C 127	Preliminary Aggregate Tests
(1) p80 material shall be removed prior to determining the specific gravity of the fine aggregate.			

Series	Tests	Standard	Minimum Frequency
B	**Aggregate Production**		
	1. Sampling	ASTM D 75	
	2. Sieve Analysis (Crushed)	ASTM C 136 & C 117	2 coarse & fine agg./lot
	3. Sieve Analysis (Natural Sand)	ASTM C 136 & C 117	One per 300 tonnes
	4. Fractured Particles (Coarse)	TPW - TM 3	One per 1000 tonnes
	5. Flat & Elongated (Coarse)	ASTM D 4791	One per 5000 tonnes
	6. Fine Aggregate Angularity	AASHTO TP 33 (A)	One per mix type
	7. Sand Equivalent	ASTM D 2419	One per mix type
C	**Cold Feed**		
	1. Sampling	ASTM D 75	2 per lot
	2. Sieve Analysis (Combined Gradation)	ASTM C 136 & C 117	2 per lot
	3. Aggregate Moisture Content	ASTM D 2216	
	Hot Bin (Batch Plants)		2 per day
	1. Sampling		
	2. Sieve Analysis	ASTM C 136 & C 117	as required
D	**Plant Inspection**		Initial set-up, and following changes in plant configuration
	1. Verification that Asphalt Cement Delivery Pipe location is in accordance with manufacturer's recommendations	AASHTO M 156	Initial set-up, and following changes in plant configuration
	2. Asphalt Binder	Division 4 Section 2	1 per 5000 tonnes or 1 per lot
	Mix Testing		
	1. Mix Asphalt Binder Content (2)	ASTM D 2172, ASTM D 6307	3 tests per lot
	2. Extracted Aggregate Sieve Analysis (2)	ASTM D 5444	3 tests per lot
	3. Mix Moisture Content (2)	TPW - TM4	2 tests per lot
	4. Field Formed Marshall Briquettes (2)	ASTM D 6926	3 tests per lot
	5. Flow & Stability	ASTM D 6927	1 per mix type
	6. Maximum Theoretical Density (2)	ASTM D 2041	3 tests per lot
(2) Under Work Category 4, the minimum frequency of testing shall be two tests per lot.			
E	**Other Related Tests**		
	1. Bulk Relative Density	ASTM D 2726	Each core or briquette
	2. Void Calculations, Cores or Formed Specimens (3)	ASTM D 3203	Each core or briquette
	3. Temperatures (plant and road)		
	4. Sampling of Bituminous Mixes (for Compaction)	ASTM D 5361	5/day/location 3/lot
	5. Density of Bituminous Concrete (by Nuclear or Electromagnetic Methods)	ASTM D 2950 or D 7113	1 per hour
	6. Random Test Site Locations	ASTM D 3665	Each lot
	7. Correction Factors, Nuclear Moisture-Density Measurement	ASTM D 2950 or D 7113	Once per contract or as required
Conditions may warrant an increase in the frequency of any of the quality control tests; the decision, arrangements and costs for which, are the responsibility of the Contractor. **(3) If two consecutive air void results fall outside the specified limits, the Contractor shall stop production. Prior to continuing production, the Contractor shall provide the Engineer with written details of what measures have been taken to improve the properties of the mix. The Contractor shall not continue production until such time that the Engineer has issued written approval to do so. Failure on the part of the Contractor to adhere to this requirement, may result in the portion of the Lot affected being ineligible for payment.** FOR SIEVE ANALYSIS ONLY: All sieve sizes referred to in ASTM Standards shall be replaced by the NSTIR equivalent sieve size as outlined in the latest edition of the Standard Specification.			

Under Work Category 4, a loose sample shall be taken at the midpoint of the Sub-Lot.

Each sample will be split into 2 (two) equal portions. One portion will be tested and the other will be set aside in the event that a re-test is required. The mean of the deviations for the Lot will be evaluated for acceptance and rejection requirements as indicated in Table 4.

Under Work Category 3, one (1) sample will be selected from each Lot using random numbers to be tested. No further

testing will be required for the Lot if the test results from the selected sample are within the following limits when compared to the Lot targets:

Mix Property	Limits for Mix Type	
	A, B, B-HF	C, C-HF, D, D-HF, E
P5000	± 6.00%	± 5.00%
P80	± 0.80%	± 0.50%
% AC	± 0.40%	± 0.30%

If the test results from the selected sample do not meet the criteria above, the remaining samples in the Lot will be tested. The mean of deviations for the Lot will evaluated for acceptance and rejection requirements as indicated in Table 4.

Table 3 - Quality Assurance Test Methods

Test Description	Test Method
Sampling Mixes	TPW - TM5
Coring	ASTM D 5361
Extraction	ASTM D6307
Sieve Analysis of Extracted Aggregate	ASTM D 5444
Bulk Relative Density	ASTM D 2726
Theoretical Maximum Relative Density	ASTM D 2041
Voids Calculations, Asphalt Concrete Specimens	ASTM D 3203
Percent Compaction, Asphalt Concrete Pavement	ASTM D 3203
Forming Marshall Specimens, Field Method	ASTM D 6926
Moisture Content Asphalt Concrete Mixes	TPW - TM4
Random Sampling of Construction Materials	ASTM D 3665
Thickness of Compacted Bituminous Materials	ASTM D 3549
Performance Graded Asphalt Binder (PGAB) Sampling	ASTM D 140
Stripping Test	AASHTO T283
FOR SIEVE ANALYSIS ONLY: All sieve sizes referred to in ASTM standards shall be replaced by the NSTPW equivalent sieve size as outlined in the latest edition of the Standard Specification.	

6.2.4 Asphalt Density. Lots and trial mix areas will be divided into segments of approximately equal quantity. The number of segments shall correspond to the Work category of the Work. Core samples will be taken from the roadway

in locations designated by the Engineer.

Coring locations for each Lot will be selected as follows:

The Engineer shall provide the Contractor with sample locations (station and offset) following placement of all asphalt concrete within a given Lot or trial mix area. Where traffic control conditions warrant, consideration shall be given to providing random core sample locations for a given mat (i.e. before all asphalt concrete for the Lot has been placed).

Two QA core samples will be taken at each random sample location. One core sample will be used for initial QA testing and the other core sample will be set aside in the event it is required for appeal testing.

Cores shall not be taken within 0.15 m of the pavement edge or longitudinal joint, nor closer than 6 m to a transverse joint. Cores shall not be taken within 10 m of a loose sample location. Cores shall be obtained a minimum of 12 hours and a maximum 24 hours after the placement of the asphalt concrete. The Contractor shall have the option of using dry ice to obtain the cores earlier than 12 hours after placement.

The Engineer may use discretion in relocating random core locations that fall within areas of severe vertical curvature (ie. base or crest of a hill).

The percent compaction for each core sample shall be determined using the individual core density and the average maximum theoretical density for the Lot. The sample mean of the Lot or trial mix density result will be evaluated for Acceptance and Rejection requirements as indicated in Table 4.

6.2.5 Thickness. The asphalt concrete shall be placed in lifts at the prescribed thickness as per the contract specifications and/or as directed by the Engineer. The pavement thickness shall be determined from the cores obtained in 6.2.4 Asphalt Density.

The Engineer may use discretion in relocating random core locations that fall within areas of severe vertical curvature (ie. base or crest of a hill).

The maximum thickness for a Lot shall be determined on a segment by segment basis, corresponding to tonnage based coring segments. Individual thickness results will be evaluated for Acceptance and Rejection requirements as indicated in Table 4. If the maximum thickness does not meet the requirements of Table 4, the tonnage in excess of the calculated amount shall be subtracted from the lot tonnage as determined by weigh tickets.

6.2.6 Performance Graded Asphalt Binder (PGAB) Sampling. PGAB samples shall be obtained and packaged as follows:

One PGAB sample shall be obtained per 5000 t of asphalt concrete mix produced by the Contractor, on a random basis, as determined by the Engineer. The Engineer may opt to request one random sample per day. Samples shall be a minimum size of one litre and shall be taken from the Contractor's storage tank in accordance with ASTM D 140. Contractors shall ensure that their asphalt storage tank(s) are equipped with sampling spigots. The samples shall be labeled with the contract number, date, time, grade and type of PGAB, supplier, refinery, and the name and the proportions of any additives added to the PGAB.

It shall be the Engineer's responsibility to submit PGAB samples for quality assurance testing (to the Consultant under contract with TPW for Bituminous Testing) in accordance with the latest edition of the Standard Specification Division 4 Section 2.

6.2.7 Smoothness. The smoothness of the finished surface (top lift) of the pavement shall be measured by the Department, using a Class 1 Inertial Laser Profiler, in accordance with the latest edition of the Standard Specification B Appendix H. Price adjustments for International Roughness Index (IRI), Localized Roughness and Mandatory Penalty will be as per Appendix H of the Standard Specification unless otherwise indicated in the contract documents.

6.2.8 Application Rate/Thickness and Cross Slope. The Contractor shall place the asphalt concrete in lifts at the thickness and cross slope indicated in the contract specifications or as otherwise directed by the Engineer.

Tonnage, thickness and cross slope shall be evaluated on a Lot by Lot basis. Tonnage shall govern the maximum amount of asphalt concrete placed. The total tonnage placed in a Lot shall not exceed the quantity determined by the following calculations:

- New Paving All Lifts (i.e. On Gravel, Pulverized or Recycled Asphalt Surfaces):

  [1.10 x (application rate) x (theoretical length) x (theoretical width)] ÷ 1000

- Repaving (i.e. 1st Lift Over Existing Asphalt, Including Milled Surfaces):

  [1.15 x (application rate) x (theoretical length) x (theoretical width)] ÷ 1000

- Repaving (i.e. 2nd Lift and Subsequent Lifts):

  [1.10 x (application rate) x (theoretical length) x (theoretical width)] ÷ 1000

The quantity in excess of the calculated amount will be subtracted from the Lot tonnage determined by weigh tickets. Cross slope shall govern the minimum specified tolerance of the lines and grades for the asphalt concrete. The specified cross slope shall be maintained within ± 0.5% (± 15 mm when measured over 3 m, perpendicular to the centerline).

6.2.9 Reporting. The Engineer will provide the Contractor with a copy of the results of QA testing within 1 (one) working day of their availability. Acceptance test results for a given Lot will not be reported to the Contractor until the quality control results for that Lot have been reported to the Engineer. Tests performed by the Engineer will not be considered to be quality control tests. If the Lot results for any one of the QA properties is outside the acceptance limits as listed in Table 4, the Lot will be evaluated in accordance with 6.4 Analysis of Rejected Lots.

6.3 Appeals. The Contractor may appeal the results of QA testing for density, asphalt binder content, gradation and thickness for any rejected or penalized Lot. The Contractor may appeal the results of QA testing for density and thickness for any rejected or penalized trial mix. In the event of an appeal, the Contractor shall serve notice of appeal to the Engineer, in writing, within 48 hours of receipt of the QA test results.

The Contractor may have a representative present during appeal testing. During the period of the testing, the Contractor's representative shall comment on anything concerning the testing which they do not consider to be valid and the Engineer shall respond to all comments in order to resolve them.

Prior to leaving the testing laboratory any unresolved comments regarding the testing procedures are to be given to the Engineer in writing. Any comments, with respect to the testing procedures, which are made subsequent to the Contractor's representative leaving the laboratory will not be considered. The new Sample Mean or Mean of the Deviations, whichever the case may be, so obtained shall be binding on both the Contractor and the Department.

6.3.1 Appeal of Individual Test Results. The Contractor may appeal individual results of acceptance testing for the asphalt binder content and gradation properties only. When an individual test result from a Lot is challenged, the validity of the test result in question will be determined in accordance with ASTM E 178, Standard Practice for Dealing with Outlying Observations, using a "t" - test at a 5 (five) percent significance level. If the outlier test procedure shows that the challenged test result is valid, then it will be used in the calculations. If the outlier test procedure shows that the challenged test result is not valid, then the test result will be discarded unless there is an obvious error in the calculations or in transposing of the numbers. If there is no obvious error, the referee sample will be tested by the Engineer. Regardless of the presence of outlying observations in the re-tested sample and remaining original results, the results from the referee sample will be binding on both the Contractor and the Department and will be used in the calculations. The results from the outlier testing will be used for any subsequent appeals. The referee sample shall be tested for the following mix properties: asphalt binder content, gradation, maximum density, in the event that the results are needed for additional appeals, if required. A new Mean of the Deviations, for the combined test results, will be determined and this value will be used for acceptance and unit price adjustments.

6.3.2 Appeal of Test Results for the Entire Lot. The Contractor may appeal the entire Lot QA test results for the density, binder content, gradation and thickness properties for any rejected or penalized Lot only once. Appeal of test results for the entire Lot will only be considered if just cause can be shown by the Contractor that the acceptance test results are not representative of the product placed. If the Contractor's quality control test results indicate greater deviations from the JMF than the quality assurance test results, no appeal will be allowed.

6.3.2.1 Appeal of Lot Binder Content and Gradation. If the Lot asphalt binder content and/or gradation is appealed, the Engineer will submit the referee samples obtained in 6.2.3 Asphalt Binder Content and Gradation for testing at the Department representative's laboratory. All original test results of the property appealed will not be considered. Only the new test results from the appeal will be used.

6.3.2.2 Appeal of Lot or Trial Mix Density. If the Lot or Trial Mix density is appealed, the Engineer will submit the appeal core samples obtained in 6.2.4 Asphalt Density for testing at the Department representative's laboratory.

The high and low test results from the original Lot will be discarded and the remaining test results will be combined with the test results for the appeal samples.

Table 4 - Acceptance and Rejection Requirements

Area	Payment			Repair/Replace Reject
	Full	Increased	Reduced	
%Theoretical Maximum Relative Density (Sample Mean)				
Lot	92.5	>92.5	89.0 - 92.4	<89.0
Asphalt Binder Content (%) (Mean of the Deviations of the Lot from the JMF)				
Type A, B, B-HF	0.0 - 0.40	N.A.	0.41 - 0.70	>0.70
Type C, C-HF	0.0 - 0.30	N.A.	0.31 - 0.55	>0.55
Type D, D-HF, E	0.0 - 0.30	N.A.	0.31 - 0.55	>0.55
Gradation (%) (Mean of the Deviations of the Lot from the JMF)				
Type A, B, B-HF (5000)	0.00 - 6.00	N.A.	6.01 - 10.00	>10.00
-80	0.00 - 0.80	N.A.	0.81 - 1.50	>1.50
Type C, C-HF (5 000)	0.00 - 5.00	N.A.	5.01 - 9.00	>9.00
-80	0.00 - 0.50	N.A.	0.51 - 1.20	>1.20
Type D, D-HF, E (5 000)	0.00 - 5.00	N.A.	5.01 - 9.00	>9.00
-80	0.00 - 0.50	N.A.	0.51 - 1.20	>1.20
In addition to the acceptance/rejection requirements for gradation, the following shall apply: a) The Lot will be rejected if the average of the lot test results for the 5 000 sieve size falls outside the gradation limits specified in Table 1. b) The Lot payment will be reduced by $5.00 per tonne, if the average of the Lot test results for the 80 sieve size exceeds, up to the maximum of 1.0%, the upper gradation limit specified in Table 1. c) The Lot will be rejected if the average of the Lot test results for the 80 sieve size exceeds, by more than 1.0%, the upper gradation limit specified in Table - 1.				
Thickness, % of the Number of Cores Taken Within Tolerance				
Lot	≥ 75.0%	N.A.	N.A.	< 75.0%
New Paving All Lifts (i.e. On Gravel, Pulverized or Recycled Asphalt Surfaces): Minimum Lift Thickness Tolerance = 0.85 x specified thickness Maximum Lift Thickness Tolerance = 1.15 x specified thickness Repaving (i.e. 1st Lift Over Existing Asphalt, Including Milled Surfaces): Minimum Lift Thickness Tolerance = 0.80 x specified thickness Maximum Lift Thickness Tolerance = 1.20 x specified thickness Repaving (i.e. 2nd Lift and Subsequent Lifts): Minimum Lift Thickness Tolerance = 0.85 x specified thickness Maximum Lift Thickness Tolerance = 1.15 x specified thickness If the Thickness for the first lift of asphalt concrete is less than the tolerance, and a second lift of asphalt concrete				

6.3.2.3 Appeal of Lot or Trial Mix Thickness. If the Lot or Trial Mix thickness is appealed, the Engineer will submit the appeal core samples obtained in 6.2.4 Asphalt Density for testing at the Department representative's laboratory. The high and low test results from the original Lot will be discarded and the remaining test results will be combined with the test results for the appeal samples. For thickness appeals under Work Category 1 and Work Category 2, 6 (six) of the 8 (eight) test results must meet or exceed the lift thickness tolerance specified in Table 4. For Work Category 3, three (3) of the four (4) test results must meet or exceed the lift thickness tolerance.

6.3.3 Payment of Appeal Testing Costs. If the new test results after the appeal process indicate that a penalty no longer applies, then the testing costs incurred by the Department during the appeal process for that Lot shall be borne by the Department. The Contractor shall be responsible for any other costs that they may incur.

If the new test results after the appeal process verify that a unit price adjustment or rejection remains valid for that Lot, the sampling and testing costs incurred by the Department during the appeal procedure shall be charged to the Contractor, as outlined in Table 6. The Contractor is responsible for any other costs that they may incur.

6.4 Analysis of Rejected Lots. Following an appeal of the entire Lot, in accordance with 6.3.2 Appeal of Test Results for the Entire Lot, if the new test results continue to indicate rejection, the new test results will be analyzed, at the discretion of the Engineer, to determine whether or not a portion of the Lot is acceptable. An analysis, as determined by the Engineer, will be carried out to determine which segments may be acceptable. If the analysis indicates partial Lot acceptance, only those areas corresponding to the sample segment(s) in which rejected material placement occurred shall be subject to 6.5.1 Removal and Replacement. Any and all price adjustments corresponding to the recalculated test results (excluding those in the rejected segment(s)) shall apply.

6.5 Repairs. Rejected work shall be repaired, remedied, overlaid, or removed and replaced at the Contractor's expense. The asphalt concrete replacement or overlay shall be the same asphalt concrete mix designation as that which is removed or overlaid. All joints and the underlying asphalt concrete mat shall be tack-coated prior to repair.

Any rejected area will be subject to the repair options listed in Table 5.

The mix tonnage associated with the repair shall be produced in accordance with this specification. The repair tonnage shall be sampled in accordance with 1.1.5 Lot. Asphalt concrete comprising repaired areas shall be subject to testing in accordance with 6.0 Quality Control/Quality Assurance. Unit price adjustments calculated in accordance with Tables 7, 8, 9 and Tables 6.1 and 6.2 of the Smoothness Specification - Appendix H shall apply.

The cost of retesting shall be borne by the Contractor as listed in Table 6. All costs associated with repairs, removal and replacement, or overlays are the responsibility of the Contractor.

Table 5 - Repair Requirements

Reason for Repair	Repair Option
Smoothness	Standard Specification, Appendix H
Thickness	Removal and Replacement, Overlaying
Surface Defects, Density, Asphalt Binder Content, Gradation	Removal and Replacement

6.5.1 Removal and Replacement. Rejected Lots or segments of Lots shall be removed by cold milling the full width of the lane and full depth of the lift in which the work is being performed.

Material removed shall become the property of the Contractor, to haul and stockpile or otherwise dispose of in an environmentally acceptable manner, at the Contractor’s expense.

6.5.2 Overlaying. Overlaying as a method of repair will only be considered in areas designated by the Engineer, for Lots or segments of Lots which are subject to rejection based on thickness. The asphalt concrete mix used to construct the overlay shall meet the same requirements as the pavement which is overlaid. The overlay shall extend the full width of the underlying pavement surface and have a finished compacted thickness of not less than 50 mm for B-HF and 40 mm for C-HF and 35 mm for D-HF.

A keyed joint shall be constructed at each end of the overlaid section as per 5.5.3 Keyed Joints. If an acceptable grade and cross slope cannot be achieved, the Contractor shall repair the area in accordance with 6.5.1 Removal and Replacement. If an overlay results in the need for additional shouldering material or adjustments to guide posts and guardrail, this work shall be carried out, at the Contractor’s expense, in accordance with the applicable items as per the Standard Specification.

6.6 Dispute Resolution for Segregation. Asphalt concrete shall be placed in accordance with the contract specifications and shall be free from segregation. Segregated areas shall be removed by cold milling the full width of

the lane and full depth of the lift in which the work is being performed. The asphalt concrete mix used to replace the segregated material shall be the same mix type and thickness as that removed. All costs associated with this work shall be borne by the Contractor.

The Department has assigned designated technical personnel who will be contacted by the Engineer in the event of a dispute between the Engineer and the Contractor with respect to identification and removal of segregated areas.
One or more of the designated personnel will review the areas in question with the Engineer and Contractor's representative within 48 hours of notification by the Engineer. The decision of the Department's designated personnel with respect to the required action shall be final.

7.0 METHOD OF MEASUREMENT

The quantity of asphalt concrete to be measured for payment shall be the number of tonnes of mix placed and accepted in accordance with this specification. The quantity of PGAB will be measured separately.

7.1 Unit Price Adjustments. Unit Price Adjustments calculated in accordance with Table 7, Table 8, Table 9, Table 10, and Table 11 of this specification shall apply. If the unit price adjustment calculated results in a negative (penalty), the unit price adjustment will be adjusted according to the Work Category as per the following:

Work Category	Application of UPA
1	100%
2	75%
3	50%
4	50%

Unit Price Adjustments as per Table 6.1 and Table 6.2 of the Smoothness Specification B Appendix H shall apply, unless otherwise noted in the contract documents.

8.0 BASIS OF PAYMENT

8.1 Asphalt Concrete. Asphalt concrete will be paid for at the contract unit price per tonne for mix incorporated and accepted in the work, which price shall be full compensation for furnishing and transporting of all materials including aggregates, natural sand, PGAB, heating, handling, mixing, placing and compacting the mix, the supply of all equipment, plant, labour, traffic control and incidentals necessary to complete the work.

PGAB used in the asphalt concrete mix (including patching and gutter material) shall be paid as a separate item and shall be based on the average Lot Quality Assurance ignition oven burns. Unit price adjustments associated with the asphalt binder material (temperature deviations) shall apply as per Division 4, Section 2 - Performance Graded Asphalt Binder.

Price adjustments determined in accordance with this specification will be calculated on a Lot by Lot basis and issued on the final progress estimate.

8.1.1 Payment for Rejected Mix. The Department will pay for only the original mix quantity. The Contractor is fully responsible to bear all costs associated with repair of rejected areas, including all materials, equipment, plant, labour, traffic control and incidentals necessary to complete the work to the satisfaction of Engineer.

Table 6 - Charges For Retesting

Activity	Price
Smoothness Testing	Standard TIR Inspection Agreement Rates
Laboratory Testing	Standard TIR Inspection Agreement Rates

9.0 WARRANTY

Table 7 - Unit Price Adjustment for Density

% of Maximum Theoretical Density (Lot Average)	Unit Price Adjustment ($ per Tonne)	% of Maximum Theoretical Density (Lot Average)	Unit Price Adjustment ($ per Tonne)
∃93.0	+0.50	90.9	-2.40
92.9	+0.40	90.8	-2.80
92.8	+0.30	90.7	-3.20
92.7	+0.20	90.6	-3.6
92.6	+0.10	90.5	-4.00
92.5	0	90.4	-4.40
92.4	-0.1	90.3	-4.80
92.3	-0.2	90.2	-5.20
92.2	-0.3	90.1	-5.6
92.1	-0.4	90	-6.00
92	-0.5	89.9	-7.00
91.9	-0.6	89.8	-8.00
91.8	-0.7	89.7	-9
91.7	-0.8	89.6	-10.00
91.6	-0.9	89.5	-11
91.5	-1	89.4	-12
91.4	-1.2	89.3	-13
91.3	-1.4	89.2	-14
91.2	-1.6	89.1	-15
91.1	-1.8	89	-16
91	-2	<89.0	Reject

Table 8 - Type A, B and B-HF Unit Price Adjustment For Asphalt Binder Content

Mean of the Deviations of Actual Asphalt Binder Content from the JMF		Unit Price Adjustment For Asphalt Binder Content $ per Tonne
A, B, B-HF	0.00 to 0.40	0
	0.41 to 0.45	-1
	0.46 to 0.50	-2
	0.51 to 0.55	-3
	0.56 to 0.60	-4
	0.61 to 0.65	-5
	0.66 to 0.70	-6
	>0.70	Reject

Table 9 - Type C and C-HF Unit Price Adjustment For Asphalt Binder Content

Mean of the Deviations of Actual Asphalt Binder Content from the JMF		Unit Price Adjustment For Asphalt Binder Content $ per Tonne
C, C-HF	0.00 to 0.30	0
	0.31 to 0.35	-1.25
	0.36 to 0.40	-2.5
	0.41 to 0.45	-3.75
	0.46 to 0.50	-5
	0.51 to 0.55	-6.25
	>0.55	Reject

Table 10 - Type D, D-HF and E Unit Price Adjustment For Asphalt Binder Content

Mean of the Deviations of Actual Asphalt Binder Content from the JMF		Unit Price Adjustment For Asphalt Binder Content $ per Tonne
D, D-HF, E	0.00 to 0.30	0
	0.31 to 0.35	-1.25
	0.36 to 0.40	-2.5
	0.41 to 0.45	-3.75
	0.46 to 0.50	-5
	0.51 to 0.55	-6.25
	>0.55	Reject

Table 11 - Unit Price Adjustment For Gradation

Sieve Designation	Mean of the Deviations of the Gradation from the JMF			Unit Price Adjustment for Gradation
	A, B, B-HF	**C, C-HF**	**D, D-HF, E**	**$ per Tonne**
5 000	0.00 to 6.00	0.00 to 5.00	0.00 to 5.00	0
	6.01 to 6.20	5.01 to 5.20	5.01 to 5.20	-0.5
	6.21 to 6.40	5.21 to 5.40	5.21 to 5.40	-1
	6.41 to 6.60	5.41 to 5.60	5.41 to 5.60	-1.5
	6.61 to 6.80	5.61 to 5.80	5.61 to 5.80	-2
	6.81 to 7.00	5.81 to 6.00	5.81 to 6.00	-2.5
	7.01 to 7.20	6.01 to 6.20	6.01 to 6.20	-3
	7.21 to 7.40	6.21 to 6.40	6.21 to 6.40	-3.5
	7.41 to 7.60	6.41 to 6.60	6.41 to 6.60	-4
	7.61 to 7.80	6.61 to 6.80	6.61 to 6.80	-4.5
	7.81 to 8.00	6.81 to 7.00	6.81 to 7.00	-5
	8.01 to 9.00	7.01 to 8.00	7.01 to 8.00	-10
	9.01 to 10.00	8.01 to 9.00	8.01 to 9.00	-15
	>10.00	>9.00	>9.00	reject
80	0.0 to 0.80	0.0 to 0.50	0.0 to 0.50	0
	0.81 to 0.90	0.51 to 0.60	0.51 to 0.60	-1
	0.91 to 1.00	0.61 to 0.70	0.61 to 0.70	-2
	1.01 to 1.10	0.71 to 0.80	0.71 to 0.80	-3
	1.11 to 1.20	0.81 to 0.90	0.81 to 0.90	-5
	1.21 to 1.30	0.91 to 1.00	0.91 to 1.00	-7.5
	1.31 to 1.50	1.01 to 1.20	1.01 to 1.20	-12
	>1.50	>1.20	>1.20	reject

In addition to the acceptance/rejection requirements for gradation, the following shall apply:

a) The Lot will be rejected if the average of the Lot test results for the 5 000 sieve size falls outside the gradation limits specified in Table 1.

b) The Lot payment will be reduced by $5.00 per tonne if the average of the Lot test results for the 80 sieve size exceeds, up to the maximum of 1.0%, the upper gradation limit specified in Table 1.

c) The Lot will be rejected if the average of the Lot test results for the 80 sieve size exceeds, by more than 1.0%, the upper gradation limit specified in Table 1.

SECTION 20 - PARTIAL DEPTH RECLAMATION WITH EMULSIFIED ASPHALT STABILIZATION (MS)

1.0 DESCRIPTION

This item covers requirements for the in-place partial depth reclamation with emulsified asphalt stabilization of the existing asphalt concrete pavement, sizing, and mixing with binder and water (if required). The work also consists of spreading and compacting the recycled cold mixed bituminous mixture, in accordance with this Specification, to the lines, grades, thicknesses and cross sections as directed by the Engineer. The reclaimed asphalt pavement shall be recycled using a mobile recycling train. The Contractor is equally responsible for all other related operations that are necessary for completion of the work.

2.0 REFERENCES

All reference standards shall be current issue or latest revision at the first date of tender advertisement. This specification refers to the following standards, specifications or publications:

- Division 4, Section 1, Emulsified Asphalt
- Division 4, Section 4, Asphalt Concrete Hot Mixed -Hot Placed
- Superpave Asphalt Concrete End Product Specification
- AARA Basic Asphalt Recycling Manual
- Wirtgen Cold Recycling Manual
- Asphalt Institute; A Basic Asphalt Emulsion Manual - Manual Series No. 19
- ASTM C117, Test Method for Material Finer Than 75 :m Sieve in Mineral Aggregates by Washing
- ASTM C127, Test Method for Specific Gravity and Absorption of Coarse Aggregate
- ASTM C131, Test Method for Resistance to Degradation of Small Size Coarse Aggregate by Abrasion and Impact in the Los Angeles Machine
- ASTM C136, Test Method for Sieve Analysis of Fine and Coarse Aggregates
- ASTM D75, Practices for Sampling Aggregates
- ASTM D140, Practice for Sampling Bituminous Materials
- ASTM D244, Test Method for Emulsified Asphalts
- ASTM D1188, Bulk Specific Gravity and Density of Compacted Bituminous Mixtures Using Paraffin-Coated Specimens
- ASTM D2041, Standard Test Method for Theoretical Maximum Specific Gravity and Density of Bituminous Paving Mixtures
- ASTM D2216, Test Method for Laboratory Determination of Water (Moisture) Content of Soil and Rock
- ASTM D5821, Standard Test Method for Determining the Percentage of Fractured Particles in Coarse Aggregate
- ASTM D6928, Standard Test Method for Resistance of Coarse Aggregate to Degradation by Abrasion in the Micro-Deval Apparatus
- ASTM D7428, Standard Test Method for Resistance of Fine Aggregate to Degradation by Abrasion in the Micro-Deval Apparatus
- CSA-A23.1M
- Occupational Health and Safety Act of Nova Scotia
- TPW TM-2 Test Method for the Petrographic Analysis of Coarse Aggregate
- TPW TM-12 Test Method for Determination of Indirect Tensile Strength of Recycled Asphalt Mixes

3.0 SUBMISSION AND DESIGN REQUIREMENTS

3.1 Emulsified Asphalt Requirements. The Contractor shall be responsible for sampling and providing the samples to the Department's representative and ensuring that the asphalt emulsion meets the requirements of Division 4 Section 1 and those stipulated in this document.

4.0 MATERIALS

4.1 Reclaimed Asphalt Pavement. The reclaimed asphalt pavement material shall have one hundred percent (100 %) passing the 37.5 mm sieve.

4.2 Emulsified Asphalt. The binder shall meet the requirements of the Departments Standard Specification, Division 4, Section 1 and those for the slow-setting cationic emulsions, CSS-1 or CSS-1H.

4.3 Corrective Aggregate. Corrective aggregate includes imported granular material spread on the road in order to improve the grading of the recycled material. The corrective aggregate shall conform to the physical requirements stipulated in Division 4, Section 4 of the Standard Specification and a maximum 25% loss during the Micro-Deval test.

4.4 Emulsified Asphalt Mix. The percent by mass of the asphalt emulsion added to the unstabilized material shall be determined by the mix design, conducted by the Department, in accordance with the Wirtgen design procedure. The combined material constituents shall produce a mix conforming to the gradation requirements of Table 4.1. The Marshall air void content of the compacted Emulsified Asphalt Mix shall be within 9-15%. Corrective aggregate shall be incorporated into the mix if the existing aggregate blend does not conform to the specified gradation as referenced in Table 4.1.

Table 4.1 - Combined Gradation

Sieve Designation (mm)	Cumulative Percent Passing (%)
37.5	100
4.75	35 - 65

Samples of Emulsified Asphalt Mix will be tested for bulk density, maximum theoretical density, air void content, dry indirect tensile strength, wet indirect tensile strength and tensile strength ratio. Laboratory prepared samples shall be prepared and cured in accordance with the Wirtgen Cold Recycling Manual before determining the strength properties. The Emulsified Asphalt Mix shall meet the requirements of Table 4.2.

Table 4.2 - EAM Strength Requirements

Property	Minimum Requirement
Dry Indirect Tensile Strength	200 kPa
Wet indirect Tensile Strength	100 kPa
Tensile Strength Ratio	50%

4.5 Water. Water shall conform to CSA-A23.1M (latest edition).

4.6 Supplementary Additives. At the discretion of the Department, and as identified in the Mix Design, conditions at the time of stabilization, may require the addition of hydrated lime or Portland cement.

5.0 CONSTRUCTION METHODS

5.1 Equipment

5.1.1 Partial Depth Reclamation and Stabilizing Equipment. Partial Depth Reclamation shall be undertaken by use of a single unit or multi-unit recycling train. The recycling unit shall consist of a cold milling machine, material sizing and mixing capability and a means to convey the processed material directly to the paver. The single unit or multi-unit recycling train shall be capable of ensuring that 100% of the reclaimed asphalt concrete passes the 37.5 mm sieve by way of sizing or screening the oversize material.

5.1.2 Cold Milling Machine. A self-propelled cold milling unit with a cutting drum capable of reclaiming a lane width of asphalt pavement in a single pass, to the depth specified in the Special Provisions, shall be used. The unit shall also be automatically controlled for grade and slope.

5.1.3 Mixing Unit. The mixing unit shall be equipped with a means of measuring the mass or volume of material being deposited into the mixer prior to the addition of the binder. The mixing unit shall have an emulsified asphalt control system equipped with a flow metre calibrated in litres per tonne and a total delivery metre calibrated in litres to continuously maintain the required amount of emulsified asphalt added to within 0.2% by mass of the reclaimed material feed. The mixing unit shall be equipped with a means of monitoring and controlling the addition of water. The mixing unit shall also be equipped with a device capable of producing a uniform and thoroughly blended stabilized mix.

5.1.4 Placement Equipment. Placement of the stabilized mix shall be carried out by means of a self-propelled mechanical paver capable of spreading the material in one continuous pass. The stabilized mix shall be conveyed directly to the paver. The paver shall be equipped with distributing screws for distributing the mixture evenly in front of

the screed. The paver shall have a vibratory or tamping bar screed capable of vibrating the full width of mix placed. Construction of windrows and use of material pick-up equipment shall not be allowed.

5.1.5 Compaction Equipment. The Contractor shall select the appropriate compaction equipment to achieve the required compaction. Along curbs, manholes and similar structures and locations not accessible to full size rollers, the mix shall be compacted with smaller compaction equipment, such as vibrating plate tampers, or by hand tampers.

5.1.6 Tankers for the Supply of Emulsified Asphalt. Only tankers with a capacity exceeding 10,000 litres shall be employed to supply the recycling machine with emulsion. Each tanker shall be fitted with two recessed pin-type tow hitches, one in front and the other behind, thereby allowing the tanker to be pushed from behind by the recycling machine, and to push a water tanker in front. Leaking tankers shall not be permitted on the site. In addition, each tanker shall be equipped with:

- A thermometer to show the temperature of the contents in the bottom third of the tank;
- A rear feed valve, with a minimum internal diameter of 75 mm when fully opened, that is capable of draining the contents of the tank;
- All-round cladding to retain heat; and
- A heating system capable of raising the temperature of the contents of the tank 200 C per hour; and A calibrated dipstick, marked at intervals of no more than 100 litres, for measuring the contents of the tank.

5.1.7 Water Tankers. The number of tankers shall be balanced with the size of the job; Pumps for filling with water shall have a minimum capacity of 500 litres per minute. The minimum internal capacity of the supply hoses shall be 100 mm. The hoses shall be flexible and non-collapsing under suction. The hoses shall also have quick-release couplings.

5.2 Placement and Compaction. The surface of the stabilized mix shall be uniform in texture and free of segregation, contamination, ravelling, rutting, potholing, cracking and other surface defects. The mix shall be spread to the profile and cross section as directed by the Engineer. The compacted surface of the mix shall be smooth and true to the specified crown and grade.

The stabilized mix shall be compacted to ensure that the density of the mix is in accordance with Section 6.6 determined from the recovery and testing of representative field samples.

5.3 Operational Constraints. The Contractor shall ensure the temperature of the emulsion is maintained in accordance with the manufacturer's recommendation. In no case shall the temperature of the emulsion fall below 60°C. Temperature of emulsion shall be checked on every load. The emulsion stabilized mix shall cure for a minimum of 48 hours.

Soft spots or areas of compacted emulsified asphalt mix exhibiting deflection, rutting, sagging or cracking shall be removed full depth and repaired with suitable, free-draining granular material. The repair work shall be approved by the Engineer prior to placement of the wearing surface.

The Contractor shall not place the emulsified asphalt mix during rain, when the surface is frozen, when there is free-standing water present, or when the ambient temperature is below 10°C.

Traffic, including construction traffic, shall be kept off the freshly placed emulsion stabilized mat until it is able to carry traffic without damage. The Contractor shall be responsible for repair of the damaged mat. Placement of the surfacing course may commence at such time when the stabilized mix can support a fully loaded, tandem truck with minimum deflection, extracted representative specimens have met mix design targets, and all defective areas, including contamination, ravelling, rutting, pot-holing, cracking, have been repaired to the satisfaction of the Engineer. Asphalt concrete repaving shall commence, in a continuous operation until completion, within a time limit of ten (10) calendar days of completion of the Partial Depth Reclamation operation provided the mix meets the requirements of this specification.

Asphalt pavement in areas inaccessible to the reclaiming equipment shall be removed and replaced with an equivalent thickness of Type B-HF or Type CHF asphalt concrete mix or equivalent mix approved by the Engineer.

5.4 Joint Preparation. All deleterious and loose milled material shall be removed from the milled surfaces at longitudinal and transverse joints after reclaiming operations are completed and before placing the stabilized mix.

5.5 Surface Appearance. The surface of the mat shall be of uniform texture and free of segregation, longitudinal streaks, fat spots, oil spills, roller marks, and other defects. Final smoothness is the responsibility of the Contractor.

5.6 Heating. The stabilized mix may be heated with drying units. Overheating or charring of the mix shall not be allowed.

6.0 QUALITY CONTROL / QUALITY ASSURANCE

At the completion of a 48-hour curing period, representative specimens measuring 150 mm by 150 mm will be extracted from the stabilized mix. Testing shall be carried out by the Department. Samples will be used to determine compliance for thickness, tensile strength, asphalt binder content and compaction. In-situ moisture contents and compacted density shall be determined by the recovery and testing of slab samples of the cured mixture at locations and frequencies determined by the Department.

6.1 Mix Design Formulation. Sample recovery and mix design formulation will be conducted by the Department or its representative. Mix designs will be conducted in accordance with procedures outlined in the latest version of the Wirtgen Cold Recycling Manual.

6.2 Emulsified Asphalt. The supplied emulsified asphalt samples shall be in accordance with the Department's Standard Specification, Division 4 Section 1 or as outlined in this Specification.

Failure of the sample to conform to any of the material requirements shall be cause for rejection of the material. The mix that has incorporated emulsified asphalt represented by the failed test result shall be deemed unacceptable and remedial measures shall include removal and replacement of the deficient mix shall apply, as directed by the Engineer.

Samples of emulsified asphalt shall be taken by the Contractor at the job site from the tanker(s). The number of tankers sampled will be at the Engineer's discretion. The sampling will be witnessed by the Engineer or the Engineer's representative. The sample shall be taken from a sampling spigot on the transfer line, if available, or from the end of the transfer line. The sample will comprise two full 4 litre containers, and shall be properly labelled. Samples shall be delivered within three (3) days of sampling to the designated testing laboratory at no additional cost to the Department.

The sample containers as supplied by the Contractor shall be triple tight epoxy lined pails or suitable leak proof plastic containers.

6.3 Sampling and Testing of Corrective Aggregate. The Department shall conduct sampling and testing to ensure that corrective aggregate incorporated into the mix meets the physical property requirements of Division 4 Section 4.

6.4 Sampling and Testing of the Emulsified Asphalt Mix. The Department or its representative shall conduct sampling and testing to ensure that the Emulsified Asphalt Mix meets the requirements of this specification. Samples shall be taken at a frequency determined by the Engineer.

6.5 Thickness. The Department or its representative shall conduct all testing to ensure that the Emulsified Asphalt Mix meets the thickness requirements specified in the Contract Documents. Thickness measurements will be taken by the Engineer at a frequency determined by the Engineer. Thickness will be checked during production by hand excavation and also will be measured by collecting representative specimens measuring 150 mm by 150 mm. Thickness requirements are met when no individual thickness measurement is 20 mm less that the specified thickness. Individual sub-lots failing to meet the requirements shall be subject to reprocessing to the satisfaction of the Engineer.

6.6 Compaction. The Department or its representative shall conduct all testing to ensure that the Emulsified Asphalt Mix meets 83% of the maximum theoretical density. The frequency of maximum theoretical density testing as well as the frequency of compaction testing shall be determined by the Engineer. The testing shall be conducted by the use of a properly calibrated nuclear gauge in accordance with ASTM D2950 using the direct transmission procedure. At each test location the material will be tested at a depth of at least 50 mm above the bottom of the stabilised layer. At least 4 readings will be taken at each test location, each reading being 90$_{o}$ to the previous reading. The field moisture content will be determined by procedures outlined in ASTM D2216. Compaction will also be measured by collecting representative specimens measuring 150 mm by 150 mm. Individual sub-lots failing to meet the requirements, shall be subject to reprocessing to the satisfaction of the Engineer. Compaction requirements are met when:

- The mean compaction is greater than or equal to 83% of the maximum theoretical density; and
- No individual compaction measurement for the lot is less than 79% of the maximum theoretical density.

6.7 Emulsified Asphalt Mix. The Department will test retrieved Emulsified Asphalt Mix samples for total asphalt binder content, aggregate gradation and tensile strength with the relevant ASTM Test Methods outlined in this specification. Samples of Emulsified Asphalt Mix will also be tested for bulk density, maximum theoretical density, and air void content. Field samples shall be tested for wet and dry indirect tensile strength.

6.8 Surface Defects. The Department will assess the completed work prior to application of the riding surface. Defects such as ravelling, segregation, contamination, bleeding shall be evaluated by the Engineer. Corrective action shall be undertaken by the Contractor in accordance with the required remedial action outlined in Table 6.1 and at no cost to the Department. It is the responsibility of the Contractor to meet the established cross-slopes and grades. After compaction, the surface of the mat shall be free from deviations exceeding 6 mm, as measured in any direction with a 3 metre straight edge. Final smoothness of the recycled mat is the full responsibility of the Contractor. Repairs shall be for the full width of the recycled area to the depth specified in the Contract documents. Reprocessing may be considered as a repair method, upon submission of a proposal by the Contractor and approval by the Engineer.

7.0 METHOD OF MEASUREMENT

The quantity of Emulsified Asphalt Mix to be measured for payment will be the area in square metres placed at the specified depth outlined in the Contract Documents. The quantity of emulsion and corrective aggregate to be measured for payment shall be in tonnes.

8.0 BASIS OF PAYMENT

Partial Depth Reclamation with Emulsified Asphalt Stabilization will be paid for at the Contract unit price per square metre for the stabilized mix actually incorporated and accepted in the work which price shall be full compensation for furnishing and transporting all of the materials including, handling, placing and compacting of all materials, water where required, the supply of all equipment, labour and incidentals necessary to complete the work. The Contractor is also responsible for costs associated with providing a fully loaded tandem truck and appropriate traffic control for the purposes of proof rolling. Payment also includes removal of existing asphalt concrete and supply and placement of hot mix asphalt concrete in areas inaccessible to the reclaiming equipment.

Asphalt emulsion will be paid as a separate item, based on residual asphalt content, and verified by the Contractor's daily weigh slips plus appropriate documentation from the supplier to verify the amount in the last tanker.

Hot mix asphalt required to replace unacceptable stabilized mix shall be considered incidental to this item and no additional payment shall be made. Corrective aggregate, for gradation modification, will be paid up to a maximum allowable unit price per tonne, as detailed in the Contract Special Provisions, plus the truck haul rate per tonne for gravel, established in the Special Provisions, for approved corrective aggregate incorporated and accepted in the work. The price shall be full compensation for furnishing of all materials, equipment, plant, labour and incidentals, including traffic control, necessary to complete the work to the satisfaction of the Engineer.

The Contractor is fully responsible to bear all costs associated with repair of areas rejected by the Engineer, including all materials, equipment, plant, labour, traffic control and incidentals necessary to complete the to the satisfaction of the Engineer.

9.0 WARRANTY

Table 6.1 – Required Remedial Actions

Defect	Severity	Remedial Action
Ravelling / Coarse Aggregate Loss	Very Slight to Slight	Correction action required
	Moderate to Severe (1)	Mill 50 mm and replace with the same asphalt concrete mix and spread rate specified for the surface course
	Very Severe (2)	Remove all stabilized mix and return to grade with asphalt concrete mix specified for the surface course
Segregation	Slight to Moderate	Correction action required
	Severe (3)	Mill 50 mm and replace with the same asphalt concrete mix and spread rate specified for the surface course

(1) Moderate to severe ravelling is defined as shallow disintegration of pavement structure with shallow pot-holes.
(2) Very severe ravelling is defined as significant disintegration of pavement structure with full depth pot-holes.
(3) Severe segregation is defined as a distinctly inconsistent texture, having an absence of aggregate fines in the matrix and coarse aggregate (stone on stone contact).

Alternate repair methods proposed by the Contractor must be approved by Highway Construction Services

SECTION 21 - PARTIAL DEPTH RECLAMATION WITH EXPANDED ASPHALT MIX (MS)

1.0 DESCRIPTION

This item covers requirements for the in-place partial depth reclamation with expanded asphalt stabilization of the existing asphalt concrete pavement, sizing, and mixing with binder and water. The work consists of spreading and compacting the recycled bituminous mixture, in accordance with this specification, to the lines, grades, thicknesses and cross sections as directed by the Engineer. The reclaimed asphalt pavement shall be recycled using a mobile recycling unit which performs all operations simultaneously. The Contractor is equally responsible for all other related operations that are necessary for completion of the work.

2.0 REFERENCES

All reference standards shall be the current issue or latest revision at the first date of the tender advertisement. This specification refers to the following standards, specifications or publications:

• Division 4, Section 2, Performance Graded Asphalt Binder (PGAB)
• Division 4, Section 4, Asphalt Concrete Hot Mixed – Hot Placed
• Superpave Asphalt Concrete End Product Specification
• AARA Basic Asphalt Recycling Manual
• Wirtgen Cold Recycling Manual
• ASTM C117, Test Method for Material Finer Than 75 ìm Sieve in Mineral Aggregates by Washing
• ASTM C127, Test Method for Specific Gravity and Absorption of Coarse Aggregate
• ASTM C131, Test Method for Resistance to Degradation of Small Size Coarse Aggregate by Abrasion and Impact in the Los Angeles Machine
• ASTM C136, Test Method for Sieve Analysis of Fine and Coarse Aggregates
• ASTM D75, Practices for Sampling Aggregates
• ASTM D1188, Bulk Specific Gravity and Density of Compacted Bituminous Mixtures Using Paraffincoated specimens
• ASTM D1557, Test Method for Laboratory Compaction Characteristics of Soil Using Modified Effort
• ASTM D2041, Standard Test Method for Theoretical Maximum Specific Gravity and Density of Bituminous Paving Mixtures
• ASTM D2950, Test Method for Density of Bituminous Concrete in Place by Nuclear Methods
• ASTM D4791, Flat Particles, Elongated Particles, or Flat and Elongated Particles in Coarse Aggregate
• ASTM D5444, Test Method for Mechanical Size Analysis of Extracted Aggregate
• ASTM D5821, Standard Test Method for Determining the Percentage of Fractured Particles in Coarse Aggregate
• ASTM D6928, Standard Test Method for Resistance of Coarse Aggregate to Degradation by Abrasion in the Micro-Deval Apparatus
• ASTM D7428, Standard Test Method for Resistance of Fine Aggregate to Degradation by Abrasion in the Micro-Deval Apparatus
• CSA-A23.1M
• Occupational Health and Safety Act of Nova Scotia
• TPW TM-2, Test Method for the Petrographic Analysis of Coarse Aggregate
• TPW TM-12, Test Method for Determination of Indirect Tensile Strength of Recycled Asphalt Mixes

3.0 SUBMISSION AND DESIGN REQUIREMENTS

3.1 PGAB Requirements. The Contractor shall be responsible for sampling and providing the samples to the Department's representative and ensuring that the Performance Graded Asphalt Binder (PGAB) meets the requirements of the Departments Standard Specification, Division 4, Section 2.

4.0 MATERIALS

4.1 Reclaimed Asphalt Pavement. The reclaimed asphalt pavement material shall have one hundred percent (100 %) passing the 37.5 mm sieve.

4.2 Performance Graded Asphalt Binder (PGAB). The Contractor shall utilize a PG58-28 Asphalt Binder with suitable expansion characteristics. The PG58-28 shall conform to the requirements of Division 4, Section 2 of the Department's Standard Specification.

4.3 Corrective Aggregate. Corrective aggregate includes imported granular material spread on the road

in order to improve the grading of the recycled material. The corrective aggregate shall conform to the physical requirements stipulated in Division 4, Section 4 of the Standard Specification and a maximum 25% loss during the Micro-Deval test.

4.4 Expanded Asphalt Mix (EAM). The total asphalt binder content of the design mix includes the existing aged binder and virgin expanded PG58-28. The percent by mass of the virgin PG58-28 added to the unstabilized material shall be determined by mix design. The combined material constituents shall produce a mix conforming to the gradation requirements of Table 4.1. The Marshall air void content of the compacted Expanded Asphalt Mix shall be within 9-15%. Corrective aggregate shall be incorporated into the mix if the existing aggregate blend does not conform to the specified gradation as referenced in Table 4.1.

Table 4.1 - Combined Gradation

Sieve Designation (mm)	Cumulative Percent Passing (%)
37.5	100
4.75	35 - 65

Samples of Expanded Asphalt Mix will be tested for bulk density, maximum theoretical density, air void content, dry indirect tensile strength, wet indirect tensile strength and tensile strength ratio. Laboratory prepared samples shall be prepared and cured in accordance with the Wirtgen Cold Recycling Manual before determining the strength properties. The Expanded Asphalt Mix shall meet the requirements of Table 4.2.

Table 4.2 - EAM Strength Requirements

Property	Minimum Requirement
Dry Indirect Tensile Strength	200 kPa
Wet indirect Tensile Strength	100 kPa
Tensile Strength Ratio	50%

4.5 Water. Water shall conform to CSA-A23.1M (latest edition).

4.6 Supplementary Additives. At the discretion of the Department, and as identified in the Mix Design, conditions at the time of stabilization, may require the addition of hydrated lime or Portland cement.

5.0 CONSTRUCTION METHODS

5.1 Equipment

5.1.1 Partial Depth Reclamation and Stabilizing Equipment. Partial Depth Reclamation shall be undertaken by use of a single unit or multi-unit recycling train. The recycling unit shall consist of a cold milling machine, material sizing and mixing capability and a means to convey the processed material directly to the paver. The single unit or multi-unit recycling train shall be capable of ensuring that 100% of the reclaimed asphalt concrete passes the 37.5 mm sieve by way of sizing or screening the oversize material.

5.1.2 Cold Milling Machine. A self-propelled cold milling unit with a cutting drum capable of reclaiming a lane width of asphalt pavement in a single pass, to the depth specified in the Special Provisions, shall be used. The unit shall also be automatically controlled for grade and slope.

5.1.3 Mixing Unit. The mixing unit shall be equipped with a means of measuring the mass or volume of material being mixed with the PGAB. The mixing unit must have a PGAB expansion system capable of producing optimum expansion and an injection system capable of injecting and blending expanded asphalt uniformly throughout the reclaimed material. The mixing unit shall be equipped with a system to control and regulate the application of expanded asphalt in relation to travel speed and mass of material within a tolerance of 0.2% by mass of reclaimed material. A system of nozzles will provide a uniform application of expanded asphalt across the full width of treated area. The system shall be adjustable for varying treatment widths. The mixing unit must have a means of monitoring and controlling the addition of water to the mix. The mixing unit shall be equipped with a device capable of producing a uniform and thoroughly blended expanded asphalt mix.

5.1.4 Placement Equipment. Placement of the Expanded Asphalt Mix (EAM) shall be carried out by means of a self-propelled mechanical paver capable of spreading the material in one continuous pass. The paver shall be equipped with distributing screws for distributing the mixture evenly in front of the screed. The paver shall have a vibratory or tamping bar screed capable of consolidating the full width of mix placed. Construction of windrows and use of material pick-up equipment shall not be allowed.

5.1.5 Compaction Equipment. The Contractor shall select the appropriate compaction equipment to achieve the required compaction. Along curbs, manholes and similar structures and locations not accessible to full size rollers, the mix shall be compacted with smaller compaction equipment, such as vibrating plate tampers, or by hand tampers.

5.1.6 Tankers for the Supply of PGAB. Only tankers with a capacity exceeding 10,000 litres shall be employed to supply the recycling machine with PGAB. Each tanker shall be fitted with two recessed pin-type tow hitches, one in front and the other behind, thereby allowing the tanker to be pushed from behind by the recycling machine, and to push a water tanker in front. Leaking tankers shall not be permitted on the site. In addition, each tanker shall be equipped with:

- A thermometer to show the temperature of the contents in the bottom third of the tank;
- A rear feed valve, with a minimum internal diameter of 75 mm when fully opened, that is capable of draining the contents of the tank;
- All-round cladding to retain heat; and
- A calibrated dipstick, marked at intervals of no more than 100 litres, for measuring the contents of the tank.

The Contractor shall ensure that the supplier of the PGAB certify that anti-foaming agents have not been added to loads destined for use in expanded asphalt.

5.1.7 Water Tankers. The number of tankers shall be balanced with the size of the job; Pumps for filling with water shall have a minimum capacity of 500 litres per minute. The minimum internal capacity of the supply hoses shall be 100 mm. The hoses shall be flexible and non-collapsing under suction. The hoses shall also have quick-release couplings.

5.2 Placement and Compaction. The surface of the EAM shall be uniform in texture and free of segregation, contamination, raveling, rutting, pot-holing, cracking, and other surface defects. The expanded asphalt mix shall be spread to the profile and cross section as specified in the Contract Documents or as approved by the Engineer. The compacted surface of the mix shall be smooth and true to the specified crown and grade.

The stabilized mix shall be compacted to ensure that the density of the mix is in accordance with Section 6.6 determined from the recovery and testing of representative field samples.

5.3 Operational Constraints. Soft spots or areas of compacted expanded asphalt mix exhibiting deflection, rutting, sagging or cracking shall be removed full depth and repaired with suitable, free-draining granular material. The repair work shall be approved by the Engineer prior to placement of the wearing surface.

The Contractor shall not place the emulsified asphalt mix during rain, when the surface is frozen, when there is free-standing water present, or when the ambient temperature is below 10°C.

Traffic, including construction traffic, shall not be allowed on the freshly placed expanded asphalt mix until such time as it is able to carry traffic without damage. The Contractor shall be responsible for repair of the damaged mat.

Placement of the surfacing course may commence at such time when the stabilized mix can support a fully loaded, tandem truck with minimum deflection, and all defective areas, including contamination, raveling, rutting, pot-holing, cracking, have been repaired to the satisfaction of the Engineer. Asphalt concrete repaving shall commence, in a continuous operation until completion, within a time limit of ten (10) calendar days of completion of the Partial Depth Reclamation operation provided the mix meets the requirements of this specification.

Asphalt pavement in areas inaccessible to the reclaiming equipment shall be removed and replaced with an equivalent thickness of Type B-HF or Type CHF asphalt concrete mix or equivalent mix approved by the Engineer.

5.4 Joint Preparation. All deleterious and loose milled material shall be removed from the milled surfaces at longitudinal and transverse joints after reclaiming operations are completed and before placing the EAM.

5.5 Surface Appearance. The surface of the mat shall be of uniform texture and free of segregation, longitudinal streaks, fat spots, oil spills, roller marks, and other defects. Final smoothness is the responsibility of the Contractor.

6.0 QUALITY CONTROL / QUALITY ASSURANCE

Testing shall be carried out by the Department. Samples will be used to determine compliance for thickness, tensile strength, asphalt binder content and compaction. In-situ moisture contents and compacted density shall be determined by the recovery and testing of slab samples of the cured expanded asphalt at locations and frequencies determined by the Department.

6.1 Mix Design Formulation. Sample recovery and mix design formulation will be conducted by the Department or its representative. Mix designs will be conducted in accordance with procedures outlined in the latest version of the Wirtgen Cold Recycling Manual.

6.2 PGAB Testing. The Contractor shall be responsible for all sampling and ensuring that the PGAB meets the requirements of this specification**.** QA Samples of PGAB shall be taken by the Contractor at the job site from one tanker randomly selected by the Engineer. The sample shall be taken from a sampling spigot on the tanker. Alternative sampling procedure may be considered at the Contractor's request and as approved by the Engineer.

The sample will comprise two full 1 Litre containers, and shall be properly labelled.

Sample containers shall be supplied by the Contractor and shall consist of triple tight steel containers or suitable leak-proof containers, which can be sealed to prevent leakage.

QA samples shall be delivered within three (3) working days of sampling to the designated QA testing laboratory.

6.3 Sampling and Testing of Corrective Aggregate. The Department shall conduct sampling and testing to ensure that corrective aggregate incorporated into the mix meets the physical property requirements of Division 4 Section 4.

6.4 Sampling and Testing of the Expanded Asphalt Mix. The Department or its representative shall conduct sampling and testing to ensure that the Expanded Asphalt Mix meets the requirements of this specification. Samples shall be taken at a frequency determined by the Engineer.

6.5 Thickness. The Department or its representative shall conduct all testing to ensure that the Expanded Asphalt Mix meets the thickness requirements specified in the Contract Documents. Thickness measurements will be taken by the Engineer at a frequency determined by the Engineer. Thickness will be checked during production by hand excavation and also will be measured by collecting representative specimens measuring 150 mm by 150 mm. Thickness requirements are met when no individual thickness measurement is 20 mm less that the specified thickness. Individual sub-lots failing to meet the requirements shall be subject to reprocessing to the satisfaction of the Engineer.

6.6 Compaction. The Department or its representative shall conduct all testing to ensure that the Expanded Asphalt Mix meets 83% of the maximum theoretical density. The frequency of maximum theoretical density testing as well as the frequency of compaction testing hall be determined by the Engineer. The testing shall be conducted by the use of a properly calibrated nuclear gauge in accordance with ASTM D2950 using the direct transmission procedure. At each test location the material will be tested at a depth of at least 50 mm above the bottom of the stabilised layer. At least 4 readings will be taken at each test location, each reading being 90_{o} to the previous reading. The field moisture content will be determined by procedures outlined in ASTM D2216. Compaction will also be measured by collecting representative specimens measuring 150 mm by 150 mm. Individual sub-lots failing to meet the requirements, shall be subject to reprocessing to the satisfaction of the Engineer. Compaction requirements are met when:

- The mean compaction is greater than or equal to 83% of the maximum theoretical density; and
- No individual compaction measurement for the lot is less than 79% of the maximum theoretical density.

6.7 Expanded Asphalt Mix. The Department will test retrieved Expanded Asphalt Mix samples for total asphalt binder content, aggregate gradation and tensile strength with the relevant ASTM Test Methods outlined in this specification. The percent by mass of new asphalt binder added to the Expanded Asphalt Mix will be determined from companion samples collected before and after the addition of expanded asphalt. Samples of Expanded Asphalt Mix will also be tested for bulk density, maximum theoretical density, and air void content. Field samples shall be tested for wet and dry indirect tensile strength.

6.8 Surface Defects. The Department will assess the completed work prior to application of the riding surface. Defects such as ravelling, segregation, contamination, bleeding shall be evaluated by the Engineer. Corrective action shall be undertaken by the Contractor in accordance with the required remedial action outlined in Table 6.1 and at no cost to the Department. It is the responsibility of the Contractor to meet the established cross-slopes and grades. After compaction, the surface of the mat shall be free from deviations exceeding 6 mm, as measured in any direction with a 3 metre straight edge. Final smoothness of the recycled mat is the full responsibility of the Contractor. Repairs shall be for the full width of the recycled area to the depth specified in the Contract documents. Reprocessing may be considered as a repair method, upon submission of a proposal by the Contractor and approval by the Engineer.

7.0 METHOD OF MEASUREMENT

The quantity of Expanded Asphalt Mix to be measured for payment will be the area in square metres placed at the specified depth outlined in the Contract Documents. The quantity of PGAB and corrective aggregate to be measured for payment shall be in tonnes.

8.0 BASIS OF PAYMENT

Partial Depth Reclamation with Expanded Asphalt Stabilization will be paid for at the contract unit price per square metre for the expanded asphalt mix actually incorporated and accepted in the work which price shall be full compensation for furnishing and transporting all of the materials including handling, placing and compacting of all materials, the supply of all equipment, labour and incidentals necessary to complete the work. The Contractor is also responsible for costs associated with providing a fully loaded tandem truck and appropriate traffic control for the purposes of proof rolling. Payment also includes removal of existing asphalt concrete material and supply and placement of hot mix asphalt in areas not accessible to the reclaiming equipment.

Performance Graded Asphalt Binder (PGAB) will be paid as a separate item. Compensation to the Contractor will be based on the Contractor's daily weigh slips plus appropriate documentation from the supplier to verify the amount in the last tanker.

Hot mix asphalt required to replace unacceptable EAM shall be considered incidental to this item and no additional payment shall be made.

Corrective aggregate, for gradation modification, will be paid up to a maximum allowable unit price per tonne, as detailed in the Contract Special Provisions, plus the truck haul rate per tonne for gravel, established in the Special Provisions, for approved corrective aggregate incorporated and accepted in the work. The price shall be full compensation for furnishing of all materials, equipment, plant, labour and incidentals, including traffic control, necessary to complete the work to the satisfaction of the Engineer.

The Contractor is fully responsible to bear all costs associated with repair of areas rejected by the Engineer, including all materials, equipment, plant, labour, traffic control and incidentals necessary to complete the to the satisfaction of the Engineer.

9.0 WARRANTY

Table 6.1 – Required Remedial Actions

Defect	Severity	Remedial Action
Ravelling / Coarse Aggregate Loss	Very Slight to Slight	Correction action required
	Moderate to Severe (1)	Mill 50 mm and replace with the same asphalt concrete mix and spread rate specified for the surface course
	Very Severe (2)	Remove all stabilized mix and return to grade with asphalt concrete mix specified for the surface course
Segregation	Slight to Moderate	Correction action required
	Severe (3)	Mill 50 mm and replace with the same asphalt concrete mix and spread rate specified for the surface course

(1) Moderate to severe ravelling is defined as shallow disintegration of pavement structure with shallow pot-holes.
(2) Very severe ravelling is defined as significant disintegration of pavement structure with full depth pot-holes.
(3) Severe segregation is defined as a distinctly inconsistent texture, having an absence of aggregate fines in the matrix and coarse aggregate (stone on stone contact).

Alternate repair methods proposed by the Contractor must be approved by Highway Construction Services

SECTION 22 - FULL DEPTH RECLAMATION WITH EXPANDED ASPHALT MIX (MS)

1.0 DESCRIPTION

This item covers requirements for the in-place full depth reclamation of the existing asphalt concrete pavement and underlying granular base; shaping and compacting the unstabilized material, adding and blending corrective aggregate if required, adding expanded asphalt, mixing, placing and compacting the expanded asphalt mix in accordance with the following specifications and the lines, grades, thicknesses, and cross-sections described in the Contract. The Contractor is equally responsible for all other related operations that are necessary for completion of the work.

2.0 REFERENCES

All reference standards shall be the current issue or latest revision at the first date of the tender advertisement. This specification refers to the following standards, specifications or publications:

- Division 4, Section 2, Performance Graded Asphalt Binder (PGAB)
- Division 4, Section 4, Asphalt Concrete Hot Mixed – Hot Placed
- Superpave Asphalt Concrete End Product Specification
- AARA Basic Asphalt Recycling Manual
- Wirtgen Cold Recycling Manual
- ASTM C117, Test Method for Material Finer Than 75 ìm Sieve in Mineral Aggregates by Washing
- ASTM C127, Test Method for Specific Gravity and Absorption of Coarse Aggregate
- ASTM C131, Test Method for Resistance to Degradation of Small Size Coarse Aggregate by Abrasion and Impact in the Los Angeles Machine
- ASTM C136, Test Method for Sieve Analysis of Fine and Coarse Aggregates
- ASTM D75, Practices for Sampling Aggregates
- ASTM D1188, Bulk Specific Gravity and Density of Compacted Bituminous Mixtures Using Paraffincoated specimens
- ASTM D1557, Test Method for Laboratory Compaction Characteristics of Soil Using Modified Effort
- ASTM D2041, Standard Test Method for Theoretical Maximum Specific Gravity and Density of Bituminous Paving Mixtures
- ASTM D2950, Test Method for Density of Bituminous Concrete in Place by Nuclear Methods
- ASTM D4791, Flat Particles, Elongated Particles, or Flat and Elongated Particles in Coarse Aggregate
- ASTM D5444, Test Method for Mechanical Size Analysis of Extracted Aggregate
- ASTM D5821, Standard Test Method for Determining the Percentage of Fractured Particles in Coarse Aggregate
- ASTM D6928, Standard Test Method for Resistance of Coarse Aggregate to Degradation by Abrasion in the Micro-Deval Apparatus
- ASTM D7428, Standard Test Method for Resistance of Fine Aggregate to Degradation by Abrasion in the Micro-Deval Apparatus
- CSA-A23.1M
- Occupational Health and Safety Act of Nova Scotia
- TPW TM-2, Test Method for the Petrographic Analysis of Coarse Aggregate
- TPW TM-12, Test Method for Determination of Indirect Tensile Strength of Recycled Asphalt Mixes

3.0 SUBMISSION AND DESIGN REQUIREMENTS

3.1 PGAB Requirements. The Contractor shall be responsible for sampling and providing the samples to the Department's representative and ensuring that the Performance Graded Asphalt Binder (PGAB) meets the requirements of the Departments Standard Specification, Division 4, Section 2.

4.0 MATERIALS

4.1 Reclaimed Asphalt Pavement. The reclaimed asphalt pavement material shall have one hundred percent (100 %) passing the 37.5 mm sieve.

4.2 Performance Graded Asphalt Binder (PGAB). The Contractor shall utilize a PG58-28 Asphalt Binder with suitable expansion characteristics. The PG58-28 shall conform to the requirements of Division 4, Section 2 of the Department's Standard Specification.

4.3 Corrective Aggregate. Corrective aggregate includes imported granular material spread on the road in order to improve the grading of the recycled material. The corrective aggregate shall conform to the physical requirements stipulated in Division 4, Section 4 of the Standard Specification and a maximum 25% loss during the Micro-Deval test.

4.4 Expanded Asphalt Mix (EAM). The total asphalt binder content of the design mix includes the existing aged binder and virgin expanded PG58-28. The percent by mass of the virgin PG58-28 added to the unstabilized material shall be determined by mix design. The combined material constituents shall produce a mix conforming to the gradation requirements of Table 4.1. The Marshall air void content of the compacted Expanded Asphalt Mix shall be within 9-15%. Corrective aggregate shall be incorporated into the mix if the existing aggregate blend does not conform to the specified gradation as referenced in Table 4.1.

Table 4.1 - Combined Gradation

Sieve Designation (mm)	Cumulative Percent Passing (%)
37.5	100
4.75	35 - 65

Samples of Expanded Asphalt Mix will be tested for bulk density, maximum theoretical density, air void content, dry indirect tensile strength, wet indirect tensile strength and tensile strength ratio. Laboratory prepared samples shall be prepared and cured in accordance with the Wirtgen Cold Recycling Manual before determining the strength properties. The Expanded Asphalt Mix shall meet the requirements of Table 4.2.

Table 4.2 - EAM Strength Requirements

Property	Minimum Requirement
Dry Indirect Tensile Strength	300 kPa
Wet indirect Tensile Strength	150 kPa
Tensile Strength Ratio	50%

4.5 Water. Water shall conform to CSA-A23.1M (latest edition).

4.6 Supplementary Additives. At the discretion of the Department, and as identified in the Mix Design, conditions at the time of stabilization, may require the addition of hydrated lime or Portland cement.

5.0 CONSTRUCTION METHODS

5.1 Equipment

5.1.1 Full Depth Reclamation and Stabilizing Equipment. The reclaimer / stabilizer shall be capable of reclaiming the existing pavement and underlying granular material to a minimum depth of 300 mm, incorporating the corrective aggregate into the mix if required, adding expanded asphalt in a controlled manner, and producing a uniform mix.

The reclaimer / stabilizer shall be fitted with an automatic sensor system to accurately maintain a preset depth of cut and have a minimum 2.0 m wide cutting drum.

The aggregate delivery vehicle shall have a system for controlled applications of the corrective aggregates to be incorporated into the mix.

The reclaimer / stabilizer shall have an expanded asphalt injection system capable of injecting and blending expanded asphalt uniformly throughout the unstabilized material.

In order to mix the unstabilized material with the expanded asphalt, the reclaimer / stabilizer shall include the following features:

- A system to control and regulate the application of expanded asphalt in relation to the travel speed and mass of material
- A system to monitor and control all aspects of the mixing process (% of asphalt binder, rate of application, % water for optimum compaction)
- A heating system to maintain operating temperature

- A system of nozzles that provides a uniform application of the expanded asphalt across the full width of the treatment area. The application system shall be adjustable for varying widths of treatment
- The system shall be equipped with a test nozzle capable of producing a replicate sample of the foamed bitumen being injected into the recycling machine.

5.1.2 Spreading Equipment. Distribution of the processed material shall be carried out by a means of a grader capable of spreading the mix to the specified cross-fall and grade. The grader shall be equipped with an automated grade control system. Construction of windrows and use of material pick-up equipment shall not be allowed.

5.1.3 Placement Equipment. Placement of the Expanded Asphalt Mix (EAM) shall be carried out by means of a self-propelled mechanical paver capable of spreading the material in one continuous pass or a grader as specified in section 5.1.2 of this specification. The paver shall be equipped with distributing screws for distributing the mixture evenly in front of the screed. The paver shall have a vibratory or tamping bar screed capable of consolidating the full width of mix placed. Construction of windrows and use of material pick-up equipment shall not be allowed.

5.1.4 Compaction Equipment. The Contractor shall select the appropriate compaction equipment to achieve the required compaction. Along curbs, manholes and similar structures and locations not accessible to full size rollers, the mix shall be compacted with smaller compaction equipment, such as vibrating plate tampers, or by hand tampers. The compaction process shall also include a vibrating/tamping foot roller in the compaction train as specified in table 5.1.

Table 5.1 - Equipment for Compacting and Finishing

Thickness of Compacted Layer (mm)	Min. Static Mass (tonne)	Drum Type
≤ 150	12	Smooth
> 150 and < 200	15	Smooth or Padfoot
≥ 200 and < 250	18	Padfoot
≥ 250	20	Padfoot

5.1.5 Tankers for the Supply of PGAB. Only tankers with a capacity exceeding 10,000 litres shall be employed to supply the recycling machine with PGAB. Each tanker shall be fitted with two recessed pin-type tow hitches, one in front and the other behind, thereby allowing the tanker to be pushed from behind by the recycling machine, and to push a water tanker in front. Leaking tankers shall not be permitted on the site. In addition, each tanker shall be equipped with:

- A thermometer to show the temperature of the contents in the bottom third of the tank;
- A rear feed valve, with a minimum internal diameter of 75 mm when fully opened, that is capable of draining the contents of the tank;
- All-round cladding to retain heat;
- A calibrated dipstick, marked at intervals of no more than 100 litres, for measuring the contents of the tank.

The Contractor shall ensure that the supplier of the PGAB certify that anti-foaming agents have not been added to loads destined for use in expanded asphalt.

5.1.6 Water Tankers. The number of tankers shall be balanced with the size of the job; generally, at least two 10,000 litre capacity tankers for the supply of compaction water such that one tanker is coupled to the recycling train while the other is filling from the nearest suitable water source. Pumps for filling with water shall have a minimum capacity of 500 litres per minute. The minimum internal capacity of the supply hoses shall be 100 mm. The hoses shall be flexible and non-collapsing under suction. The hoses shall also have quick-release couplings.

5.2 Full Depth Reclamation and Stabilization. The Contractor shall reclaim and stabilize the existing asphalt concrete pavement and underlying granular base to the limits described in the Contract Documents. Corrective aggregate, if required, shall be added to the roadway prior to stabilization. The existing material shall be stabilized to a depth of 150 mm, or as specified in the Contract. The overlap between successive passes of the reclaimer / stabilizer shall be a minimum of 100 mm. Unstabilized material exceeding 37.5 mm in size shall be removed from the surface of the reclaimed material.

The Contractor shall be required to recycle the entire roadway pavement area, including the tapers, radii and widening. This may require modifications or specially adapted equipment to complete the work. All areas not recycled must have existing pavement excavated and replaced with Type C-HF or Type B-HF asphalt concrete, all at the unit price for Expanded Asphalt Stabilization.

5.3 Placing, Grading and Compacting. The surface of the expanded asphalt mix shall be uniform in texture and free of segregation, contamination, ravelling, rutting, pot-holing, cracking, and other surface defects. The expanded asphalt mix shall be spread to the profile and cross section as specified in the Contract Documents or as approved by the Engineer. The compacted surface of the expanded asphalt surface shall be smooth and true to the specified crown and grade.

The stabilized mix shall be compacted to ensure that the density of the mix is in accordance with Section 6.6 determined from the recovery and testing of representative field samples.

5.4 Operational Constraints. Soft spots or areas of compacted expanded asphalt mix exhibiting deflection, rutting, sagging or cracking shall be removed full depth and repaired with suitable, free-draining granular material. The repair work shall be approved by the Engineer prior to placement of the wearing surface.

The Contractor shall not place the expanded asphalt mix during rain, when the surface is frozen, when there is free-standing water present, or when the ambient temperature is below 10°C.

Traffic, including construction traffic, shall not be allowed on the freshly placed expanded asphalt mix until such time as it is able to carry traffic without damage.

Placement of the surfacing course may commence at such time when the stabilized mix can support a fully loaded, tandem truck with minimum deflection, and all defective areas, including contamination, raveling, rutting, pot-holing, cracking, have been repaired to the satisfaction of the Engineer. Asphalt concrete repaving shall commence, in a continuous operation until completion, within a time limit of ten (10) calendar days of completion of the Full Depth Reclamation operation provided the mix meets the requirements of this specification.

Asphalt pavement in areas inaccessible to the reclaiming equipment shall be removed and replaced with an equivalent thickness of Type B-HF and/or Type C-HF asphalt concrete mix or equivalent mix approved by the Engineer.

5.5 Joint Preparation. All deleterious and loose milled material shall be removed from the milled surfaces at longitudinal and transverse joints after reclaiming operations are completed and before placing the EAM.

5.6 Surface Appearance. The surface of the mat shall be of uniform texture and free of segregation, longitudinal streaks, fat spots, oil spills, roller marks, and other defects. Final smoothness is the responsibility of the Contractor.

6.0 QUALITY CONTROL / QUALITY ASSURANCE

6.1 Mix Design Formulation. Sample recovery and mix design formulation will be conducted by the Department or its representative. Mix designs will be conducted in accordance with procedures outlined in the latest version of the Wirtgen Cold Recycling Manual.

6.2 PGAB Testing. The Contractor shall be responsible for all sampling and ensuring that the PGAB meets the requirements of this specification**.** QA Samples of PGAB shall be taken by the Contractor at the job site from one tanker randomly selected by the Engineer. The sample shall be taken from a sampling spigot on the tanker. Alternative sampling procedure may be considered at the Contractor's request and as approved by the Engineer.

The sample will comprise two full one (1) litre containers, and shall be properly labelled.

Sample containers shall be supplied by the Contractor and shall consist of triple tight steel containers or suitable leak-proof containers, which can be sealed to prevent leakage.

QA samples shall be delivered within three (3) working days of sampling to the designated QA testing laboratory.

6.3 Sampling and Testing of Corrective Aggregate. The Department shall conduct sampling and testing to ensure that corrective aggregate incorporated into the mix meets the physical property requirements of Division 4 Section 4.

6.4 Sampling and Testing of the Expanded Asphalt Mix. The Department or its representative shall conduct sampling and testing to ensure that the Expanded Asphalt Mix meets the requirements of this specification. Samples shall be taken at a frequency determined by the Engineer.

6.5 Thickness. The Department or its representative shall conduct all testing to ensure that the Emulsified Asphalt Mix meets the thickness requirements specified in the Contract Documents. Thickness measurements will be taken by the Engineer at a frequency determined by the Engineer. Thickness will be checked during production by hand excavation and also will be measured by collecting representative specimens measuring 150 mm by 150 mm. Thickness requirements are met when no individual thickness measurement is 20 mm less that the specified thickness. Individual sub-lots failing to meet the requirements shall be subject to reprocessing to the satisfaction of the Engineer.

6.6 Compaction. The Department or its representative shall conduct all testing to ensure that the Expanded Asphalt Mix meets 83% of the maximum theoretical density. The frequency of maximum theoretical density testing as well as the frequency of compaction testing shall be determined by the Engineer. The testing shall be conducted by the use of a properly calibrated nuclear gauge in accordance with ASTM D2950 using the direct transmission procedure. At each test location the material will be tested at a depth of at least 50 mm above the bottom of the stabilised layer. At least 4 readings will be taken at each test location, each reading being 90$_{o}$ to the previous reading. The field moisture content will be determined by procedures outlined in ASTM D2216. Individual sub-lots failing to meet the requirements, shall be subject to reprocessing to the satisfaction of the Engineer. Compaction requirements are met when:

- The mean compaction is greater than or equal to 83% of the maximum theoretical density; and
- No individual compaction measurement for the lot is less than 79% of the maximum theoretical density.

6.7 Expanded Asphalt Mix. The Department will test retrieved Expanded Asphalt Mix samples for total asphalt binder content, aggregate gradation and tensile strength with the relevant ASTM Test Methods outlined in this specification. The percent by mass of new asphalt binder added to the Expanded Asphalt Mix will be determined from companion samples collected before and after the addition of expanded asphalt. Samples of Expanded Asphalt Mix will also be tested for bulk density, maximum theoretical density, and air void content. Field samples shall be tested for wet and dry indirect tensile strength.

6.8 Surface Defects. The Department will assess the completed work prior to application of the riding surface. Defects such as ravelling, segregation, contamination, bleeding shall be evaluated by the Engineer. Corrective action shall be undertaken by the Contractor in accordance with the required remedial action outlined in Table 6.1 and at no cost to the Department. It is the responsibility of the Contractor to meet the established cross-slopes and grades. After compaction, the surface of the mat shall be free from deviations exceeding 6 mm, as measured in any direction with a 3 metre straight edge. Final smoothness of the recycled mat is the full responsibility of the Contractor. Repairs shall be for the full width of the recycled area to the depth specified in the Contract documents. Reprocessing may be considered as a repair method, upon submission of a proposal by the Contractor and approval by the Engineer.

7.0 METHOD OF MEASUREMENT

The quantity of Expanded Asphalt Mix to be measured for payment will be the area in square metres placed at the specified depth outlined in the Contract Documents. The quantity of PGAB and corrective aggregate to be measured for payment shall be in tonnes.

8.0 BASIS OF PAYMENT

Full Depth Reclamation with Expanded Asphalt will be paid for at the contract unit price per square metre at the specified depth for mix incorporated and accepted in the work, which price will be full compensation for, mobilization of all equipment, pulverizing the existing asphalt concrete to the specified depth, supply and addition of water to maintain Optimum Moisture Content, supply and addition of water to suppress dust, grading, compaction of mix to the specified density, regrading and repair as directed by the Engineer, the supply of all equipment, plant, labour and incidentals, including traffic control necessary to complete the work to the satisfaction of the Engineer. The Contractor is also responsible for costs associated with providing a fully loaded tandem truck and appropriate traffic control for the purposes of proof rolling. Payment also includes removal of existing asphalt concrete material and supply and placement of hot mix asphalt in areas not accessible to the reclaiming equipment. Performance Graded Asphalt Binder (PGAB) will be paid as a separate item. Compensation to the Contractor will be based on the Contractor's daily weigh slips plus appropriate documentation from the supplier to verify the amount in the last tanker. Hot mix

asphalt required to replace unacceptable EAM shall be considered incidental to this item and no additional payment shall be made.

Corrective aggregate, for gradation modification, will be paid up to a maximum allowable unit price per tonne, as detailed in the Contract Special Provisions, plus the truck haul rate per tonne for gravel, established in the Special Provisions, for approved corrective aggregate incorporated and accepted in the work. The price shall be full compensation for furnishing of all materials, equipment, plant, labour and incidentals, including traffic control, necessary to complete the work to the satisfaction of the Engineer.

The Contractor is fully responsible to bear all costs associated with repair of areas rejected by the Engineer, including all materials, equipment, plant, labour, traffic control and incidentals necessary to complete the to the satisfaction of the Engineer.

9.0 WARRANTY

Table 6.1 – Required Remedial Actions

Defect	Severity	Remedial Action
Ravelling / Coarse Aggregate Loss	Very Slight to Slight	Correction action required
	Moderate to Severe (1)	Mill 50 mm and replace with the same asphalt concrete mix and spread rate specified for the surface course
	Very Severe (2)	Remove all stabilized mix and return to grade with asphalt concrete mix specified for the surface course
Segregation	Slight to Moderate	Correction action required
	Severe (3)	Mill 50 mm and replace with the same asphalt concrete mix and spread rate specified for the surface course

(1) Moderate to severe ravelling is defined as shallow disintegration of pavement structure with shallow pot-holes.
(2) Very severe ravelling is defined as significant disintegration of pavement structure with full depth pot-holes.
(3) Severe segregation is defined as a distinctly inconsistent texture, having an absence of aggregate fines in the matrix and coarse aggregate (stone on stone contact).

Alternate repair methods proposed by the Contractor must be approved by Highway Construction Services

SECTION 23 - FULL DEPTH RECLAMATION WITH PORTLAND CEMENT (MS)

1.0 DESCRIPTION

This item covers requirements for the in-place full depth reclamation with cement consisting of pulverization and mixing the existing asphalt concrete pavement and underlying granular base with Portland cement, soil and water to produce dense, hard cement treated base. It shall be proportioned, mixed, placed, compacted, and cured in accordance with this specification and shall conform to the lines, grades, thicknesses, and cross-sections described in the Contract.

2.0 REFERENCES

All reference standards shall be current issue or latest revision at the first date of tender advertisement. This specification refers to the following standards, specifications or publications:

- AASHTO T134, Standard Test Method for Moisture - Density Relations of Soil Cement Mixtures
- AASHTO T310, Standard Test Method for In-Place Density and Moisture Content of Soil and Soil Aggregate by Nuclear Methods (Shallow Depth)
- ASTM D1633, Standard Test Method for Compressive Strength of Moulded Soil-Cement Cylinders
- ASTM C136, Test Method for Sieve Analysis of Fine and Coarse Aggregates
- ASTM D75, Practices for Sampling Aggregates
- ASTM D4791, Flat Particles, Elongated Particles, or Flat and Elongated Particles in Coarse Aggregate
- ASTM D5444, Test Method for Mechanical Size Analysis of Extracted Aggregate
- ASTM D5821, Standard Test Method for Determining the Percentage of Fractured Particles in Coarse Aggregate
- ASTM D6928, Standard Test Method for Resistance of Coarse Aggregate to Degradation by Abrasion in the Micro-Deval Apparatus
- ASTM D7428, Standard Test Method for Resistance of Fine Aggregate to Degradation by Abrasion in the Micro-Deval Apparatus
- CAN/CSA A 3001, Cementitious Materials for use in Cement
- Occupational Health and Safety Act
- PCA EB052, Soil-Cement Laboratory Handbook
- PCA EB068, Thickness Design for Soil-Cement Pavements
- TPW TM-2, Test Method for the Petrographic Analysis of Coarse Aggregate
- TPW TM-12, Test Method for Determination of Indirect Tensile Strength of Recycled Asphalt Mixes

3.0 SUBMISSION AND DESIGN REQUIREMENTS

3.1 Mix Design. Preparation and submission of the Full Depth Reclamation with Portland cement (FDR-PC) mix design will be the responsibility of the Department. The Department or its representative will assess the in situ asphalt concrete pavement and underlying base gravels and soils. The determination if corrective aggregate is required will be the responsibility of the Department or its representative as well as the development of the design of the cement stabilized mix.

3.2 Requirements for Mix Design. A FDR-PC mix design will be conducted in accordance with the procedures outlined in the latest edition of the Portland Cement Association's Soil-Cement Laboratory Handbook.

For mix design purposes, prior to commencing the work, the Department or its representative will obtain samples that are representative of the materials that will be produced during the in-place processing operation. As a minimum the Department or its representative will retrieve a sample of the surface course materials, underlying base gravels and soils to a depth no greater than the proposed depth of recycling, at an interval such that a minimum of ten (10) samples are recovered. These samples will be used to establish the design rate(s) of the cement content as a percentage of mass of the dry unstabilized material.

The mix design(s) will identify the type, manufacturer and supplier of the Portland cement, total cement content, total water content, optimum moisture content, maximum dry density and seven (7) day compressive strength. The mix design(s) will identify the area(s) that it applies to. Using the optimum moisture content from the initial moisture density test, a series of FDR-PC specimens will be developed at varying cement contents. For each cement content, a minimum of two (2) specimens will be prepared, moist cured for a period of seven (7) days and be tested for unconfined compressive strength. The mix design(s) will include a copy of all calculations performed to determine the

design rate(s) of cement. The mix design(s) will also identify the type, source, gradation and quantity of any corrective aggregate if required to be used in the mix.

The mix design report will also contain a summary of the sample locations with approximate stationing and depth and will include photos of the samples recovered. The report will contain information on the type, manufacturer and supplier of the Portland cement with the technical specifications of the product, details of the moisture-density characteristics, including a graph plotting moisture versus density, graphical plots of strength with incremental changes in cement content and the design cement content.

4.0 MATERIALS

4.1 Corrective Aggregate. Corrective aggregate includes imported granular material spread on the road in order to improve the grading of the recycled material. The corrective aggregate shall conform to the physical requirements stipulated in Division 4 Section 4 of the Standard Specification and a maximum 25% loss resulting from the Micro-Deval test.

4.2 Cementitious Materials. All cementitious materials used shall comply with the latest specifications for Portland cement (CAN/CSA A 3001).

4.3 Water. Water shall be free from substances deleterious to the hardening of the cement-treated material.

4.4 Cement Treated Mixture. The combined material constituents shall produce a mix conforming to the gradation requirements of Table 4.1. Corrective aggregate shall be incorporated into the mix if the existing aggregate blend does not conform to the specified gradation as referenced in Table 4.1.

Table 4.1 - Combined Gradation

Sieve Designation (mm)	Cumulative Percent Passing (%)
37.5	95 - 100
4.75	35 - 65

5.0 CONSTRUCTION METHODS

5.1 Equipment

5.1.1 Pulverizer. The pulverizer shall be a self-propelled machine, specifically manufactured for Full Depth recycling work and capable of reducing the existing materials to a size that will pass a 75 millimeter (mm) sieve. The pulverizer shall be capable of processing to a minimum depth of 300 mm. The specified depth of pulverization will be identified in the Special Provision of the Contract. The machine shall be equipped with standard depth control and must maintain a consistent cutting depth and width. The machine shall also be equipped with a gauge to show the depth of the material being processed.

5.1.2 Cement Spreader. The cement shall be incorporated into the mix by means of a bulk spreader. Application of cement using a bulk spreader will be subject to approval by the Engineer following an assessment of the current or anticipated environmental conditions. For bulk spreading, the Contractor shall provide a method for verifying that the proper amount of cement is being applied. The Contractor shall provide proof of calibration if the cement spreader.

5.1.3 Spreading Equipment. Distribution of the processed material shall be carried out by means of a grader capable of spreading the mix to the specified cross-fall and grade. The grader shall be equipped with an automated grade control system.

5.1.4 Aggregate Delivery Vehicle. The aggregate delivery vehicle shall have a system for controlled applications of any corrective aggregate to be incorporated into the mix.

5.1.5 Compaction Equipment. Compaction equipment shall be appropriate to achieve the required compaction. Along curbs, manholes and similar structures and locations not accessible to full size rollers, the mix shall be densified with smaller compaction equipment, such as vibrating plate tampers or by hand tampers. The FDR-PC process shall also include a vibrating pad/tamping foot roller in the compaction train.

5.1.6 Water Tankers. The number and size of the water tankers shall be balanced with the size of the work.

5.2 Full Depth Reclamation and Stabilization. The Contractor shall reclaim and stabilize the existing asphalt concrete pavement and underlying granular base and/or soil to the limits described in the Contact's Special Provisions. The pulverized material shall be reduced in size such that 100% of the materials pass the 75 mm sieve. Where the Contractor opts to prepulverize the roadway prior to stabilization, the depth of the pre-pulverization shall be 50 mm less than the depth of stabilization. Corrective aggregate, if required, shall be added to the roadway prior to stabilization. The mixture shall be comprised only of materials that are identified in the mix design unless otherwise approved by the Engineer.

5.2.1 Scarification. Before the cement is applied, scarification may be required to the full depth of mixing. Scarification is a required when the processed material is more than 2% above or below the optimum moisture content. When the material is below optimum moisture content water shall be added to the material. The prepulverized material shall be sealed and properly drained at the end of the day or if rain is anticipated.

5.2.2 Application of Cement. The specified quantity of cement applied shall be that which is identified in the mix design and shall be applied uniformly in a manner that minimizes dust and is satisfactory to the Engineer. The time from cement placement on the soil to start of mixing shall not exceed 30 minutes. The overlap of successive passes of cement shall be a maximum of 100 mm.

5.2.3 Mixing. Mixing shall begin as soon as possible after the cement has been spread and shall continue until a uniform mixture is produced. The mixed material shall meet the following gradation conditions:

The final mixture (bituminous surface, granular base and subgrade soil) shall be pulverized to the blend ratio as per the mix design. Additional material can be added to the top of from the subgrade to improve the mixture gradation, as long as the material was included in the mix design.

Mixing shall be continued until the product is uniform in colour, meets gradation requirements and is at the required moisture content throughout. The entire operation of cement spreading, water application and mixing shall result in a uniform pulverized mixture for the full design depth and width.

The Contractor shall be required to recycle the entire roadway pavement area, including tapers, radii and widening. This may require modifications or specially adapted equipment to complete the work. All areas not recycled must have the existing pavement excavated and replaced with Type C-HF and/or B-HF asphalt concrete or riding surface approved by the Engineer, all at the unit price for FDR-PC.

5.3 Compaction. Field density of the compacted material shall be determined by nuclear method in the direct transmission mode. Optimum moisture and maximum dry density shall be determined prior to the start of construction and in the field during construction by moisture-density testing.

At the start of compaction, the moisture content of the material shall be within 2% of the specified optimum moisture content. No section shall be left undisturbed for longer than 30 minutes during compaction operations. All compaction operations shall be completed with two (2) hours from the start of mixing.

The processed material shall be uniformly compacted to a minimum of 98% of the maximum dry density established during the mix design procedure.

5.4 Finishing. As the compaction operation nears completion, the surface material shall be shaped to the specified lines, grades and cross sections. If necessary, the surface shall be lightly scarified or broom dragged to remove imprints left by the equipment.

Compaction shall then be continued until a uniform and adequate density is obtained.

During the finishing process, the surface shall be maintained at optimum moisture content by means of water spray devices that will not erode the surface. All finishing operations shall be completed within four (4) hours from the start of mixing.

5.5 Curing. Finished portions of the FDR-PC base that are travelled on by equipment used in constructing an adjoining section shall be protected in a manner as to prevent equipment from damaging completed work.

After completion of final finishing, the surface shall be cured by application of a bituminous or other approved

sealing membrane. The curing material shall be applied as soon as possible, but not later than twenty-four (24) hours after completing finishing operations. The surface shall be kept continuously moist prior to the application of the curing material.

For bituminous curing material, the FDR-PC base shall be dense and free of all loose and extraneous materials and shall contain sufficient moisture to prevent excess penetration of the bituminous material. The bituminous material shall be uniformly applied to the surface of the completed cement treated material. The exact rate and temperature of application for complete coverage, without undue run-off, shall be specified by the Engineer.

Should it be necessary for construction equipment or other traffic to transit the covered surface before the bituminous material has cured sufficiently to prevent pickup, sufficient sand cover shall be applied before such use.

Sufficient protection from freezing shall be given to the FDR-PC base for 7 days after its construction or as approved by the Engineer.

5.6 Traffic. Completed section of the FDR-PC base can be opened to low speed local traffic and to construction equipment provided that the curing material is not impaired and the FDR-PC base is sufficiently stable to withstand marring or permanent deformation. The section can be opened to all traffic after the FDR-PC base has received a curing compound or subsequent surface and is sufficiently stable to withstand marring or permanent deformation.

5.7 Micro-cracking. The Department or its representative will monitor the strength gain of the FDRPC material. Micro-cracking will begin when the modulus of the FDR-PC base is within the range of 1000 to 1400 MPa, approximately 24 to 72 hours after construction.

The Contractor shall perform the micro-cracking operation using the same (or equivalent tonnage) steel wheel roller that has a minimum mass of 12 tonne. The Contractor shall operate the roller at maximum amplitude and a speed between 3 and 5 kilometers per hour. The Contractor shall take care to maintain the lines, grades and cross section established during finishing operations. The Contractor shall not bridge the centerline crown during the micro-cracking operation.

The micro-cracking operation is completed when the modulus of the FDR-PC base is reduced by 50 to 70 percent.

5.8 Surfacing. Subsequent pavement layers (asphalt concrete, seal coat or concrete) can be placed at any time after finishing operations, as long as the FDR-PC base is sufficiently stable to support the required construction equipment without marring or permanent deformation of the surface.

5.9 Maintenance. The Contractor shall maintain the FDR-PC base in good condition until all work is completed and accepted. Such maintenance shall be performed by the Contractor and at the Contractor's own expense.

Maintenance shall include immediate repairs of any defects that may occur. If it necessary to replace any processed material, the replacement shall be to full depth, with vertical cuts, using either cement-treated material or asphalt concrete approved by the Engineer.

5.10 Operational Constraints. The Contractor shall not place the FDR-PC mix or apply curing seal coat during rain, or when the surface is frozen, nor when the mix shows signs of free-standing water or when the ambient temperature is below 10°C.

6.0 QUALITY CONTROL / QUALITY ASSURANCE

Quality Control (QC) testing will be carried out by the Department or its representative for the purpose of ensuring that the material placed in the work conforms to the requirements of this specification.

6.1 Cementitious Materials Testing. The Contractor shall be responsible for ensuring that the Portland cement meets the requirements of this specification and shall submit documentation verifying that the cement meets the requirements outlined in CAN/CSA A-3001.

6.2 Sampling and Testing of Corrective Aggregate. The Department or its representative will conduct sampling and testing to ensure that any corrective aggregate incorporated into the mix meets the physical property requirements as outlined in Table 4.1: Physical Requirements of Corrective Aggregate.

6.3 Lot Size. The lot size shall as determined by the Engineer.

6.4 Sampling and Testing of FDR-PC. The Department or its representative shall conduct sampling and testing to ensure that the FDR-PC meets the requirements of this specification. Samples shall be taken at a frequency determined by the Engineer.

6.5 Thickness. The Department or its representative shall conduct all testing to ensure that the Emulsified Asphalt Mix meets the thickness requirements specified in the Contract Documents. Thickness measurements will be taken by the Engineer at a frequency determined by the Engineer. Thickness will be checked during production by hand excavation and also will be measured by collecting representative specimens measuring 150 mm by 150 mm. Thickness requirements are met when no individual thickness measurement is 20 mm less that the specified thickness. Individual sub-lots failing to meet the requirements shall be subject to reprocessing to the satisfaction of the Engineer.

6.6 Compaction. The processed material shall be uniformly compacted to a minimum of 98% of maximum dry density as per AASHTO T134. The frequency of compaction testing shall be ten (10) per sub-lot. The testing shall be conducted by the use of a properly calibrated nuclear gauge in accordance with AASHTO T 310. Compaction testing will be conducted with the gauge in direct transmission mode. At each location, the material will be tested at a depth no less than 50 mm above the bottom of the stabilized layer. Four readings will be taken at each location, each 90° from the previous. QC compaction tests will be submitted to the Engineer within three (3) working days of testing. Compaction measurements will be taken at a minimum frequency of ten (10) locations per sub-lot. Compaction requirements for the lot are met when no individual compaction measurement for the lot is less than 98% of the maximum dry density. Individual sub-lots failing to meet the requirements shall be subject to reprocessing to the satisfaction of the Engineer.

6.7 Surface Defects. The Department will assess the completed work prior to application of the riding surface. Defects such as ravelling, segregation, contamination shall be evaluated by the Engineer. Corrective action shall be undertaken by the Contractor in accordance with the required remedial action outlined in Table 6.1. It is the responsibility of the Contractor to meet the established cross-slopes and grades. Smoothness of the recycled mat is the full responsibility of the Contractor. Repairs shall be for the full width of the recycled area to the depth specified in the Contract documents. Reprocessing may be considered as a repair method, upon submission of a proposal by the Contractor and approval by the Engineer.

7.0 METHOD OF MEASUREMENT

The quantity of FDR-PC mix is to be measured for payment will be the area in square meters placed at the specified depth outlined in the Contract's Special Provisions. The quantity of corrective aggregate to be measure for payment will be in tonnes.

8.0 BASIS OF PAYMENT

8.1 Stabilized Mix. The FDR-PC mix will be paid for at the Contract unit price per square meter at the specified depth for mix incorporated and accepted in the work, which price will be full compensation for mobilization of all equipment, pulverizing the existing asphalt concrete, granular and soils to the specified depth, supply and addition of water to maintain optimum moisture content, supply and addition of water to suppress dust, grading, compaction of the mix to the specified density, curing, micro-cracking, re-grading and repair as directed by the Engineer, the supply of all equipment, plant, labour and incidentals, including traffic control necessary to complete the work to the satisfaction of the Engineer.

Portland cement will be paid as a separate item. Compensation to the Contractor or the Owner for differences between actual Portland cement content, as verified by the Contractor's daily weigh slips plus appropriate documentation from the supplier, to verify the amount in the last tanker for the total payable tonnage, will be as follows:

Payment to the Contractor will be made for Portland cement identified in the mix design. Payment will be based on the actual unit bid price per tonne as invoiced by the Contractor by the supplier for the work.

Corrective aggregate, for gradation modification, will be paid up to a maximum allowable unit price per tonne, as detailed in the Contract Special Provisions, plus the truck haul rate per tonne for gravel, established in the Special Provisions, for approved corrective aggregate incorporated and accepted in the work. The price shall be full compensation for furnishing of all materials, equipment, plant, labour and incidentals, including traffic control, necessary to complete the work to the satisfaction of the Engineer.

8.2 Payment for Rejected Mix. The Department will pay for only the original FDR-PC mix. The Contractor is fully responsible to bear all costs associated with repair of areas rejected by the Engineer, including all materials, equipment, plant, labour, traffic control and incidentals necessary to complete the work to the satisfaction of the Engineer.

9.0 WARRANTY

Table 6.1 – Required Remedial Actions

Defect	Severity	Remedial Action
Ravelling / Coarse Aggregate Loss	Very Slight to Slight	Correction action required
	Moderate to Severe (1)	Mill 50 mm and replace with the same asphalt concrete mix and spread rate specified for the surface course
	Very Severe (2)	Remove all stabilized mix and return to grade with asphalt concrete mix specified for the surface course
Segregation	Slight to Moderate	Correction action required
	Severe (3)	Mill 50 mm and replace with the same asphalt concrete mix and spread rate specified for the surface course

(1) Moderate to severe ravelling is defined as shallow disintegration of pavement structure with shallow pot-holes.
(2) Very severe ravelling is defined as significant disintegration of pavement structure with full depth pot-holes.
(3) Severe segregation is defined as a distinctly inconsistent texture, having an absence of aggregate fines in the matrix and coarse aggregate (stone on stone contact).

Alternate repair methods proposed by the Contractor must be approved by Highway Construction Services

SECTION 1 - PILES

1.0 DESCRIPTION

This section details the supply, delivery, handling, storing and driving of timber piles, steel H-piles, steel pipe piles and steel sheet piles. In all cases piles shall be of the type and size as indicated on the plans and shall be driven in the location(s), to the lines and grades and to the depths as indicated on the plans or as otherwise directed by the Engineer.

2.0 REFERENCES

All reference standards shall be current issue or latest revision at the first date of tender advertisement. This specification refers to the following standards, specifications or publications:

- CAN3-056, Round Wood Piles
- CSA-080, Wood Preservation
- CAN/CSA-G40.20/G40.21-M, Grade 300W, General Requirements for Rolled or Welded Structural Quality Steel/Structural Quality Steel
- ASTM A 328, Steel Sheet Piling
- ASTM D 1143, Method of Testing Piles Under Static Axial Compressive Load
- National Building Code of Canada
- CSA-W47.1, Certification of Companies for Fusion Welding of Steel
- CSA-W59-M, Welded Steel Construction (Metal Arc Welding)
- CAN/CSA S6, Canadian Highway Bridge design Code

3.0 SUBMISSIONS AND DESIGN REQUIREMENTS

The Contractor shall submit, at least 7 days in advance of the commencement of the work, the manufacturer's certification that the materials supplied meet the specified requirements.

3.1 Timber Piles. The Contractor shall supply certification of conformance with CAN3-056 and CSA-080.

3.2 Steel Piles. The Contractor shall supply mill certificates for H-piles, pipe piles and sheet piles.

3.2.1 Welding. The Contractor shall supply the CWB approved welding procedure for steel H-pile and pipe pile splices and cap plate and pile point connections.

The Contractor shall submit proof of certification for the welders conducting the work, prior to commencing the work. All welders shall be certified by the CWB to CAN/CSA W47.1 specifications.

3.3 Pile Driving System. The Contractor shall submit, for approval, at least 14 days in advance of any pile installation, a detailed description and drawing of the proposed driving system(s) including, the manufacturer's specifications for the hammer and driving system including the leads proposed. The submission shall provide the full scale details of characteristics necessary to evaluate performance, including, but not limited to, the manufacturer's name, type of hammer, rated energy per blow at the normal working rate, the mass of the striking parts of the hammer, the mass of the driving cap and the type and elastic properties of the hammer and pile cushion materials. The submission shall also include, but not be limited to, the following requirements: The leads employed shall be supported independent of the pile. Impact of the pile driving hammer shall be axial and square with respect to the pile axis. Leads shall be immobile during hammer operation but shall be capable of adjustment to accommodate changing the centre of gravity of the driving system during driving.

4.0 MATERIALS

Piles shall be stored at or near the site, in an organized, straight and horizontal fashion to avoid permanent distortion, in a manner satisfactory to the Engineer. Caps and points shall be acceptably stored on pallets or blocked at least 150 mm off the ground.

The method of handling and storing piles shall be such as to avoid damage to the piles. Nylon or canvas slings shall be used to handle treated timber and coated/galvanized steel piles. Cant-hooks or pike poles shall not be used. Cuts or breaks in the surface of treated timber piles and damages to coating systems for steel piles shall be remedied in accordance with applicable standards, and to the full satisfaction of the Engineer. Piles damaged during handling, transportation or storage shall be replaced by the Contractor at their own expense.

4.1 Timber Piles. All timber piles shall conform to CAN3-056 and shall be cut from live, sound and solid trees, preferably when the sap is down. They shall contain no unsound knots. Sound knots will be permitted provided the diameter of the knot does not exceed 100 mm or 30% of the diameter of the pile at the point where it occurs. Any defect or combination of defects which will impair the strength of the pile more than the maximum allowable knot, shall not be permitted. All knots shall be trimmed close to the body of the pile. The butts shall be sawed square and the tips shall be tapered to a point not less than 100 mm in diameter unless otherwise directed by the Engineer. Unless otherwise specified, all piles shall be peeled by removing all the rough bark and at least 80% of the inner bark. No strip of the inner bark remaining on the stick shall be over 20 mm wide or over 200 mm long, and there shall be at least 25 mm of clean wood surface between any two such strips. Not less than 80% of the surface on any circumference shall be clean wood. In untreated piling for use in exposed work, the diameter of the heartwood shall be not less than 80% of the required diameter of the pile.

Piles shall be cut above the ground swell and shall taper from butt to tip. A line drawn from the center of the tip to the center of the butt shall not fall outside of the center of the pile at any point more than 1% of the length of the pile. Piles shall be treated according to CSA-080.

Round piles shall have a diameter at the tip and butt after peeling, as stipulated in CAN3-056.

4.2 Steel Piles. All piles shall be new material, straight and in accordance with CSA-G40.21-M 300W for steel H-piles and pipe piles and ASTM A 328 for steel sheet piles. The length, size, and type of piles shall be as shown on the plans or as approved by the Engineer.

4.2.1 Pile Caps and Points. The Contractor shall fabricate/supply cap plates and pile points in accordance with the details presented in the contract documents. In the absence of details in the contract documents, the Contractor shall propose pile cap and point details for approval. Steel used for pile cap plates shall meet the requirements of CAN/CSA G40.21, Grade 300W.

4.2.2 Welding Electrodes. Electrodes for the Shielded Metal Arc Welding (SMAW) process shall be certified to CAN/CSA W48.1 and shall be basic (low hydrogen) electrodes E48016 or E48018.

Electrodes for the Flux Cored Arc Welding (FCAW) Process shall be certified to CAN/CSA W48.5-E4801T-X-CH with a minimum Charpy V-Notch Impact Property equal to 27 Joules at -30℃.

5.0 CONSTRUCTION METHODS

5.1 Timber Piles

5.1.1 General. In general, the penetration for any pile shall be not less than 3 m in hard material, and not less than 30% the length of the pile nor less than 6 m in soft material. For foundation work, piling used to penetrate a very soft upper stratum overlying a hard stratum, shall penetrate the hard stratum a sufficient distance to rigidly fix the ends.

5.1.2 Equipment. All equipment for pile driving shall be subject to the approval of the Engineer. Timber piles shall be driven with a gravity hammer or diesel hammer. Gravity hammers shall weigh not less than 907 kg. The height of fall shall be so regulated as to avoid injury to the pile and shall in no case exceed 5 m. Pile driver leads shall be constructed in such a manner as to afford freedom of movement to the hammer and shall be held in position by guys or stiff braces to insure support to the pile during driving. The leads shall preferably be of sufficient length so that the use of a follower will not be necessary.

The driving of piling with followers shall be avoided, if practicable, and shall be done only with the written approval of the Engineer. When followers are used one pile from every group of ten shall be a long pile driven without a follower, and shall be used as a test pile to determine the average bearing capacity of the group.

Water jets shall not be used unless approved in writing by the Engineer, in which case jetting shall be subjected to all such conditions as may be required or specified by the Engineer.

5.1.3 Preparation for Driving. Foundation piles shall not be driven until after the excavation is completed to 300 mm below final grade.

When necessary to avoid injury to the heads of piles, they shall be protected by caps of approved design and shall preferably have a rope or other suitable suction and timber shock block. Iron collars or bands shall be used on the heads of piles when necessary to protect against splitting or booming during driving. When necessary, the tips of the piles shall be shod with metal shoes of an approved design, the tips of the piles being carefully shaped to secure even

and uniform bearing on the shoes.

The Engineer shall be given not less than 48 hours notice before driving of piling in any unit is started, in order that an inspector may be placed on the work. Piling shall be driven only when an inspector is present and payment will not be allowed for piling driven in violation of this provision.

5.1.4 Driving of Piles. Piles shall be driven with variation of not more than 5 mm per 250 mm from the vertical or from the batter line indicated, and with a deviation of not more than 150 mm from the position indicated on the plans at elevation of cutoff. Any piles which do not meet these requirements shall be drawn and redriven.

Any material forced up between the piles shall be removed to correct elevation before concrete is placed.

Piles shall be driven to the distance below cutoff elevation shown on the plans or as ordered, or shall be driven until the required bearing capacity is obtained. Piles driven with heads below the cutoff elevation shall be withdrawn and replaced by new and larger piles at the expense of the Contractor. Broken, split, misplaced, or otherwise unsatisfactory piles, shall be drawn and replaced by satisfactory piles if so ordered by the Engineer. All piles raised during the process of driving adjacent piles, shall be driven down again without additional compensation, if required by the Engineer.

Full length piles shall always be used where practicable, and piles shall be spliced only with the written approval of the Engineer. If splices cannot be avoided, an approved method of splicing shall be used.

The tops of piles shall be sawed to a true plane as shown on the plans and at the cutoff elevation fixed by the Engineer, with a tolerance of not more than 25 mm.

The tops of treated piles shall after final cutoff, be treated, as directed by the Engineer, with at least 3 applications of a preservative as specified in CSA 080-M or until satisfactory penetration has been obtained, and the top shall then be covered if required, with 4.5 kg sheet lead of sufficient size to cover the top of the pile and to be bent around the sides of the pile not less than 100 mm below the top of the pile for its entire circumference. Lead pile caps shall be wired with at least 6 turns of strong wire and stapled with at least 24 staples and afterwards covered up with coal tar.

Holes bored in treated piles shall be treated as stipulated in CSA 080-M.

5.1.5 Determination of Bearing Capacity. The bearing capacity of piles shall be determined by actual loading tests conducted according to ASTM D 1143 by the Engineer. In the absence of loading tests, the allowable bearing capacity of piles shall be as noted in the Special Provisions or on the plans and shall be determined by the Hiley Pile Formula as detailed in the National Building Code of Canada, unless otherwise directed by the Engineer.

In case piling is to be driven by means other than a gravity hammer, the piles shall be driven to the penetration determined from the results of test piles driven by the gravity hammer, regardless of the bearing capacities computed from the air or diesel hammer formulas. Bearing capacities shall be computed from the applicable hammer formula. However, to serve as a check on the results being obtained, and in case of any discrepancy between the computed capacities, another pile shall be driven as directed by the Engineer.

In case water jets are used in connection with the driving, the bearing capacity shall be determined by the above formulae from the results of driving after the jets have been withdrawn.

When piles with bearing capacity less than 14 t are specified, and when the pay length necessary to secure 14 t capacity does not exceed the pay length required for the specified capacity by more than 10%, piles shall be driven to 14 t capacity if directed by the Engineer.

5.1.6 Test Piles. When required, the Contractor shall drive test piles or other extra piles at the locations designated by the Engineer. These piles shall be of such length as will accommodate any variation in soil conditions from that indicated on the plans or in the proposal.

When piles are to be driven by means other than a gravity hammer, test piles shall be driven with a gravity hammer to determine the penetration necessary to secure the required bearing capacity. Such test piles shall not be driven until excavation is completed to 300 mm below grade. Two or more such test piles shall be driven in each major substructure unit, and the number driven shall be as specified by the Engineer. They shall be driven in the locations directed by the Engineer. Additional test piles of this nature shall be driven at any time and in such locations as directed by the Engineer.

5.1.7 List of Piles. Prior to starting footing excavation, the Contractor shall drive such test piles as may be required at

that time by the Engineer. The Engineer will then estimate the penetrations required and will make a list of piling lengths to be ordered, furnishing the Contractor with a copy of this list. The lengths given in the list shall be based on the lengths which are assumed to remain in the completed structure plus an allowance to provide for fresh heading, which allowance will not exceed 1200 mm unless a greater allowance shall be requested by the Contractor in writing. The Engineer will not order more than a portion of the piles on the list until piles in the first shipment shall have been driven and have demonstrated the accuracy of the list. The list may be revised for the remaining portion of the piles if found necessary or desirable.

5.2 Steel Piles

5.2.1 Steel H-Piles and Steel Pipe Piles. The Contractor shall carry out the work as indicated in the contract documents and/or as specifically directed by the Engineer.

The Contractor shall carry out the work with a pile driving system(s) capable of developing the capacity as indicated in the contract documents and/or as specifically directed by the Engineer.

The Contractor shall fabricate/supply and install cap plates and pile points in accordance with the details presented in the contract documents. In the absence of details in the contract documents, the Contractor shall propose pile cap and point details for approval.

The Contractor shall splice the pile sections in accordance with the details presented in the contract documents. In the absence of details in the contract documents, the Contractor shall propose pile splice details for approval.

The Contractor shall take special care during handling and driving operations to minimize damage to the pile protective coatings. Any damage done to the coatings of piles shall be repaired to the full satisfaction of the Engineer prior to driving the pile.

5.2.2 Pile Installation. The installation of each pile shall be subject to the approval of the Engineer who shall be the sole judge of the acceptability of each pile with respect to the final driving resistance, depth of penetration or other criteria used to determine the capacity of the pile.

The Contractor shall ensure that the piles are installed in accordance with the specified criteria, provided by the Engineer and based on the Contractor's approved driving system(s).

During driving, pile heads showing evidence of damage such as curled flange tips, curled pipe wall (driving pipe piles with an external hammer), etc. which indicate that the pipe stiffness is compromised, shall be trimmed immediately prior to finalizing, and immediately prior to each retapping sequence. When the pile damage is evident only after removal of the hammer from the pile, the pile head shall be trimmed and the pile redriven to the specified capacity. If, in the opinion of the Engineer, the pile head damage causes excessive uncertainty in estimating pile capacity; and is a result of misaligned, worn, or poorly fitting driving equipment, or improper pile driving technique; the Contractor shall adjust, modify or replace the driving equipment or methods so that further damage does not occur.

Immediately prior to internal driving of a pipe pile, a plug of dry concrete having a compacted height of 2.5 times the pile diameter shall be deposited in the base of the pile. The ratio of cement to stone to sand shall be 1:2:4, with a maximum water-to-cementing materials ratio of 0.25. Driving shall be discontinued on a plug after 90 minutes from the time of mixing. After 90 minutes a smaller charge (50% of initial volume) of fresh concrete shall be added.

Followers shall only be used with the expressed written consent of the Engineer.

The first pile driven at any pile group location shall be driven to finalization, prior to commencing the driving of other pile(s) within the same group.

Any piles which become displaced as the result of driving of adjacent piles shall be retapped to re-establish the finalization criteria and the specified capacity.

Piles which are subject to relaxation shall be retapped and/or driven until it can be demonstrated that the permanent pile capacity meets or exceeds the specified capacity. All retaps shall be conducted with a hammer warmed by applying a minimum of 20 blows on a pile other than the pile to be tested or any adjacent piles. Retaps shall not be carried out within 24 hours of the end of the previous driving of that pile or any adjacent pile(s) within a clear distance of 3 m and forming part of the group. Retaps shall, as a minimum, advance the pile a distance of 150 mm or reach a total of 50

blows, whichever occurs first. The Contractor shall keep detailed field notes on retapping tests to confirm that the above provisions have been met, prior to cutting the piles to final grade.

The Contractor shall ensure that a minimum of 500 mm of pile length remains above the specified cut-off elevation after finalization and the Contractor shall cut all piles at the specified grade in a horizontal plane only after finalization of the pile has been approved by the Engineer.

For pipe piles, the Contractor shall remove all foreign materials and water from the entire length of the pile.

5.2.3 Pile Installation Tolerances. The Contractor shall ensure that the pile remains within the specified tolerances throughout the entire length of the driven pile. All piles shall be driven with a variation of not more than 10 mm/m from vertical or from the incline specified in the contract documents. In no case shall the total variation exceed 100 mm from the specified location. Pile tolerances shall be measured at the ground line and at the cut-off elevation and in no cases shall piles be loaded horizontally to move the pile within specified tolerances. For piles outside the specified tolerances, the Contractor shall submit a report, for the approval of the Engineer, stamped and signed by a Professional Engineer registered or licensed to practice in the Province of Nova Scotia, detailing the findings and, if required, any proposed corrective measure(s) to remedy the work. The Contractor shall carry out all remedial work at their costs.

5.2.4 Pile Splices, Cap Plate and Pile Point Connections, and Welds. Welding of field and shop splices for steel H-piles, pipe piles, cap plates and pile point connections shall be by the SMAW or FCAW process. Pile splices shall be complete penetration butt splice welds, following CWB approved welding procedures. The Engineer may request to test or otherwise have the welder approved on the procedures outlined in the specifications. For all welding, the workmanship of the assembly shall meet the standards of CAN/CSA W59.

The Contractor shall submit shop drawings indicating pile shoes, splice details and pile head reinforcement. The piles shall be delivered in lengths as long as practical to make up the total pile lengths as detailed in the tender documents. If the individual pile length detailed in tender documents is shorter than 18 m, splices not will be accepted. If the individual pile length detailed in tender documents is longer than 18 m, one splice shall be permitted per pile and all costs shall be borne by the Contractor. If a longer pile is required from what is indicated in the tender documents to achieve specified refusal criteria, the Department will pay for additional splices at the fixed rate of $500.00 each. Only one splice shall be permitted per pile unless otherwise approved by the Engineer.

The basic electrodes of E480 classification that are not used within 4 hours after removal from ovens shall be dried for at least one hour at a temperature between 370°C and 430°C before being used. Roughness of oxygen cut surfaces shall not be greater than that defined by the ANSI Surface Roughness Value of 1000. Roughness exceeding this value and occasional notches or gouges, not more than 5 mm deep on otherwise satisfactory surfaces, shall be removed by machining or grinding. Oxygen cut surfaces and edges shall be left free of adhering slag. Corrections of defects shall be flared to the oxygen cut surface with a slope not exceeding 1 in 10. Defects of oxygen cut surfaces shall not be repaired by welding except with the express approval of the Engineer for correction of occasional notches or gouges less than 10 mm deep. These weld repairs shall be made by suitably preparing non-conforming surfaces, welding with basic electrodes not exceeding 4 mm in diameter, observing applicable SMAW requirements Subsection 5.2.5 and grinding the completed weld smooth and flush with adjacent surface to produce a satisfactory finish.

Welding of steel H-piles made of CAN/CSA G40.21, Grade 300W, of 20 mm thickness and under, and welding of steel pipe piles shall not require preheating when base metal temperature is above 0°C. When base metal temperature is 0°C or lower, the base metal shall be preheated to at least 10°C and maintained at this minimum temperature during welding. Steel over 20 mm thick shall be preheated to 10°C before any welding is done. No welding shall be done when the ambient temperature is lower than -18°C. The preheating zone shall be a minimum of 75 mm on each side of the joint.

No welding shall be done when there is wind and/or when it is raining unless proper protection is provided. All methods of protection shall be subject to the approval of the Engineer prior to any welding being carried out. When piles have been welded within a heated enclosure during cold weather, the pile shall not be removed from this enclosure until the welded joint has cooled so that it is warm to the bare hand.

No pile shall be driven until the welded joint has been inspected and approved by the Engineer.

5.2.5 Procedure for Shielded Metal Arc Welding and Flux Cored Arc Welding. The details of welding procedure, workmanship and technique shall conform to CAN/CSA W59. The design and construction provisions for Dynamically Loaded Structures of Clause 12 of CAN/CSA W59 shall apply.

The work shall be positioned for flat position welding whenever practical. When welding in vertical positions progression for all passes shall be upward.

Before welding over previously deposited metal, slag shall be removed and welds and adjacent base metal shall be brushed clean. This requirement shall apply not only to successive layers but also to successive beads and to the crater area when welding is resumed after interruption.

Classification and size of electrodes, arc length, voltage and amperage shall be suitable for thickness of material, type of groove, welding positions and other circumstances pertaining to the work. Welding current shall be within the range recommended by the electrode manufacturer.

Butt joint groove welds except those produced with the aid of backing shall have the root of the initial weld air carbon-arc gouged, chipped or ground to sound metal before welding is started from the second side. Particular care shall be taken in the gouging, chipping or grinding operation so that the remaining weld metal or base metal is not nicked or undercut. Defective portions of the weld shall be removed without substantial removal of the base metal. Groove welds made with the use of backing shall have the weld metal thoroughly fused with the backing.

Steel H-pile splice groove welds shall be terminated at the ends of a joint in a manner to ensure sound welds by use of extension bars or runoff tabs. Extensions shall be removed upon completion and cooling of the weld, and the ends of the weld made smooth and flush with the edges of the abutting parts.

When tack welds are used for alignment, care shall be exercised by properly grinding or preparing stops and starts to make continuous welding satisfactory.

Flux, pin holes, craters, visual surface defects and excessive crown shall be removed before depositing the next layer of weld.

Stringer beads shall be used for horizontal welds.

5.3 Steel Sheet Piles. Piles shall be driven with a diesel hammer or others adequate for the purpose and subject to the Engineer's approval. They shall be driven to an elevation as shown on the plans or as approved by the Engineer. If considered necessary by the Engineer, the hammer shall be equipped with a driving cap to suit the piling. After being driven to the approved elevation, piles shall be cut off neatly and uniformly at the elevation indicated on the plans or as directed by the Engineer. All surplus piling and cut offs shall become the property of the Department and shall be stored as directed by the Engineer.

Piles damaged during handling, transporting, or driving shall be replaced by the Contractor at the Contractor’s expense.

Piles shall be erected and driven true to alignment with the individual piles plumb in both directions at locations and to dimensions as shown on the plans. If necessary, they shall be pulled and redriven. Each pile shall be within 100 mm of its true position at all points above the ground line and also within 100 mm of plumb for its entire height.

The piling for each individual sheet pile structure is to be erected and driven around a falsework supporting one or more templates. The Contractor shall prepare drawings showing the proposed method of supporting the piling during erection, driving, excavation, unwatering and concrete work, against any possible action of hydrostatic water pressure, wind, current or ice during the construction period. These drawings shall be submitted to the Engineer for their approval in advance of any construction or the purchase of any material for this purpose. The Contractor shall be held responsible for any loss or damage which may occur to the sheet pile structure during construction, due to any cause whatsoever, and shall replace or repair the sheet pile structure entirely at their own cost. Timber shall not be permitted to remain in the finished work. All falsework shall be completely removed, as directed, upon completion of the concrete work.

All piles of an individual sheet pile structure shall be set up before driving and then driven in steps, the distance being suitable to the piling and to the resistance being offered by the materials being penetrated. This distance shall not exceed 900 mm for moderate resistance and 1500 mm for easy driving as determined by the Engineer. Driving shall not be continued if difficulties are encountered. The piles adjoining the obstruction are to be driven first before returning to those offering difficulty. If they still cannot be driven, the obstruction shall be removed by suitable means. The Contractor shall provide holes on the piling for anchor bolts, reinforcing steel and handling and erecting the piles as required. Holes shall not be larger than absolutely necessary.

6.0 QUALITY CONTROL / QUALITY ASSURANCE

6.1 Inspection and Testing of Welds. Inspection and testing of welds will be carried out by the Engineer, unless noted otherwise in the contract documents.

The procedure and technique for visual and non-destructive testing shall be in accordance with CAN/CSA W59, Clauses 7 and 8. The acceptance criteria for all inspections shall be based on CAN/CSA W59, Section 12, Dynamically Loaded Structures.

Inspection and testing organizations shall demonstrate to the Engineer that the methods they propose to use for non-destructive testing are suitable, and the Welding Inspection Organization shall be certified to CAN/CSA W178, Qualification Code for Welding Inspection Organizations.

The methods, types and amounts of weld inspection and testing will follow the specified requirements from Division 5, Section 3, Structural Steel, Subsection 6.1, Welding. If defects are identified, the Engineer shall determine the additional percentage of testing that will be carried out to ensure the soundness and quality level of all the welds. All corrected welds are to be retested.

Guided bend tests shall be carried out on coupons in accordance with CAN/CSA W47.1 Section 8.5 and will be tested by the Engineer. Runoff tabs required for bend tests shall be made of the same material and thickness as the H-pile. Guided bend test coupons may be taken from the actual pile splice by removing the coupon from a steel pile splice. These specimens shall have the backing removed by mechanical means or by flame cutting to within 3 mm of its thickness followed by grinding or machining. If the Engineer determines that a guided bend test coupon fails to meet the standard, they may then test sufficient coupons as they feel are necessary to provide assurance that the balance of the welding is satisfactory. The preparation of these test coupons shall be done by the Contractor before the pile splice is driven below the ground. The Contractor shall restore the pile to its original condition, if the weld is acceptable. The length of the weld on 75 mm long runoff tabs shall be a minimum of 65 mm. All guided bend test coupons shall be stamped by the welder. Non-destructive testing may be performed on the coupons in lieu of guided bend tests.

The quality of welds in steel pile splices shall be in accordance with CAN/CSA W59, Section 12, Clause 12.5.4. The acceptance criteria for defects shall be in accordance with CAN/CSA W59, Clause 12.5.4 and shall meet the limits described in this clause for tension welds. The quality of weld required for guided bend tests shall be in accordance with CAN/CSA W47.1, Clauses 8.5 and 8.6.

6.2 Dynamic Pile Testing. Piles, as identified in the contract documents and/or as specifically directed by the Engineer, shall be dynamically tested during driving for measurement and estimation of mobilized resistance, hammer performance, pile stress and soil dynamic properties at the end of initial driving and during all retaps. The Engineer, based on the results of dynamic testing and analysis, will determine the pile acceptance criteria.

The testing procedure will be carried out in accordance with AASHTO T298-99.

The Contractor shall notify the Engineer at least 7 days in advance of the pile driving operations. The Contractor shall assist the Engineer in carrying out testing. The Contractor shall provide the Engineer with reasonable means of access to the pile for attaching instruments, with the pile in the leads. The Contractor shall provide a work platform, minimum size of 1.2 m by 1.2 m, capable of being raised to the top of the pile. The Engineer will require approximately one hour per pile, per test, to attach the instruments. The Contractor shall supply an electrical power supply of 20 Amperes, 115 Volts, 60 Hz, AC, for use by the Engineer during the tests. Field generators shall be equipped with functioning voltage and frequency meters, and shall only supply electrical power for the pile testing. The Contractor shall provide the Engineer with access for a motor vehicle (van/truck) within 15 m of the pile test or a shelter within the same distance. The shelter shall have a minimum floor size of 2.5 m by 2 m, a minimum ceiling height of 2 m, and the interior temperature shall be maintained above 10°C. With the dynamic testing equipment attached to the pile, the Contractor shall drive to end of initial driving and retap the pile with a hammer of the specified size, as directed by the Engineer.

Stresses in the pile will be monitored during driving to ensure that the stresses do not exceed 90% of the pile yield stress. If directed by the Engineer, the Contractor shall reduce the driving energy delivered to the pile by means of cushion or helmet modifications, or by reducing the energy output of the hammer. If non-axial driving is indicated by the measurements, the Contractor shall immediately realign the driving system.

7.0 METHOD OF MEASUREMENT

7.1 General. A record will be kept by the Engineer or representative for each pile showing the following information:

- actual length in metres delivered to the job site
- length in meters before driving
- date driven
- position or location referenced to plan
- length in meters after driving (sound length if timber)
- penetration in millimetres under the last blows of the hammer
- lengths in meters cut off during and after driving (broken down into sound and unsound lengths if timber)
- final cut off elevation

7.2 Steel Sheet Piling Delivered Driven. The quantity on which payment is based is the area remaining in place below the theoretical cut-off elevation. The area is calculated as the product of the average length of pile remaining in place (determined from driving records) below the theoretical cut-off elevation and the perimeter of the cofferdam at the inner flange line of the piling.

7.3 Steel H-Piling and Steel Pipe Piling Delivered. The length for payment is the sum of the lengths delivered and as specified on the plans. In cases where piles are driven beyond the tip elevations shown on the plans, the quantity for payment may be increased if it is determined that the piling delivered to the site and as shown on the plans was not of sufficient length to complete the work.

7.4 Driving Steel H-Piles, Steel Pipe Piles and Timber Piling. The quantity on which payment is based is the sum of the lengths of piles remaining in place (determined from the driving records) below the cut-off elevation shown on the plans.

8.0 BASIS OF PAYMENT

8.1 Timber Piles. Timber piles will be paid for at the contract unit bid price per metre of pile in place for Timber Piles for sound lengths of piles in the completed structure, which price shall include supply, storage, field treatment and preparation, placement and driving of piles, pile shoes, lead pile caps where required and the transportation of all such material to the job site and all equipment, plant, falsework, centering, bracing, tools, labor and incidentals necessary to complete work. Where an allowance in excess of 1200 mm for fresh heading has been furnished by the Department at the request of the Contractor, such excess allowance in meters shall be deducted from the lengths of piling paid for under this item.

Piling shall be driven only when an inspector is present and payment will not be allowed for piling driven in violation of this provision.

All piles raised during the process of driving adjacent piles, shall be driven down again without additional compensation, if required by the Engineer.

Payment will not be made for unauthorized piles, unsatisfactory driven piles, portions of piles cut off, any piles not driven, or any other costs to the Contractor.

Test piles or other extra piles ordered driven by the Engineer, which do not form part of the completed structure will be paid for as above.

Pile Load Tests will be paid for at the contract unit bid price for Pile Loading Tests which price shall include supply of all materials and all equipment, labor and incidentals necessary to conduct the tests to the satisfaction of the Engineer.

8.2 Steel Piles Delivered. Steel piles delivered will be paid for at the contract unit bid price per metre for Steel H-Piles Delivered, Steel Pipe Piles Delivered and per square metre for Steel Sheet Piles Delivered which prices shall include the supply, delivery and handling of the piles on the job site, steel plates used to reinforce pile tips, pile caps, pile splices, and all equipment, plant, tools, labour, and incidentals necessary to complete the work to the satisfaction of the Engineer.

8.3 Steel Piles Driven. Steel piles driven in place in the finished work will be paid for at the contract unit bid price per metre for Steel H-Piles Driven, Steel Pipe Piles Driven and per square metre for Steel Sheet Piles Driven which prices shall include all handling and storing; falsework; placing; erecting; driving; cutting; supply, fabrication and fastening of splice plates; supply, fabrication, and fastening of reinforcing plates to the pile tips; supply, fabrication and fastening of steel pile caps and all labour, material, plant, equipment, tools, and incidentals necessary to complete the work to the satisfaction of the Engineer. Corner sheet piles shall be considered as standard piles for payment.

Payment will not be made for unauthorized piles, unsatisfactory driven piles, portions of piles cut off, any piles not driven, or any related costs to the Contractor.

The unit bid prices for Steel H Piles Driven and Steel Pipe Piles Driven shall be a minimum of 50% of the unit price of Steel H Piles Delivered and Steel Pipe Piles delivered, respectively. If the unit price is less than the minimum allowable, the Contractor's unit bid price will be increased to 50% of the unit price of Steel H Piles Delivered and Steel Pipe Pile Delivered, and the respective aggregate amounts of the tender will be adjusted accordingly.

9.0 WARRANTY

SECTION 2 - TIMBER STRUCTURES

1.0 DESCRIPTION

This section details the supply of timber and the construction of timber bridges and timber cribs.

2.0 REFERENCES

All reference standards shall be current issue or latest revision at the first date of tender advertisement. This specification refers to the following standards, specifications or publications:

- CSA-O80, Wood Preservation
- ASTM A 307A, Carbon Steel Bolts and Studs, 60000 psi Tensile
- NLGA Standard Grading Rules for Canadian Lumber
- CSA-G164-M, Hot Dip Galvanizing of Irregularly Shaped Articles
- CSA-B111, Spikes

3.0 SUBMISSIONS AND DESIGN REQUIREMENTS

4.0 MATERIALS

4.1 Timber. All timber shall be graded and stamped to NLGA No. 1 Structural Eastern Hemlock, Western Hemlock or Douglas Fir species only. It shall be square sawn as shown on the plans or to the dimensions as directed by the Engineer.

All timber shall be given a plant pressure treatment in accordance with CSA-O80.

4.2 Hardware. Hardware shall meet the following specifications:

- Machine bolts, lag bolts, drift bolts, anchor bolts, nuts, and round plate washers: to ASTM A 307A
- Spikes: to CSA-B111
- Hot dip galvanized hardware, bolts, nuts, washers and spikes: to CSA-G164-M

All hardware shall be galvanized unless otherwise shown on the plans.

5.0 CONSTRUCTION METHODS

5.1 Timber Bridges. The bridge shall be built in accordance with the plans or to the lines and grades as directed by the Engineer.

When additional framing is required at the job site, the new surfaces shall be satisfactorily treated with three brush coats of preservative as specified in CSA-O80. No structure shall be commenced until the foundation upon which it is to rest has been approved by the Engineer. The transportation, storage, handling, and placement of timber shall be completed in a manner that does not damage the material.

Under marine conditions special treatment, conforming to CSA-O80 shall be required.

5.2 Timber Cribs. Timber Cribs shall be constructed in accordance with the approved plans and specifications or as directed by the Engineer.

6.0 QUALITY CONTROL / QUALITY ASSURANCE

7.0 METHOD OF MEASUREMENT

The timber in any structure shall be measured by the cubic metres of timber in place.

8.0 BASIS OF PAYMENT

8.1 Timber Structures. Timber in structures will be paid for at the contract unit bid price per cubic metre of timber for Timber in Structures, which price shall include supply and placing of timber, treating and framing (when required) at the job site, supply of the treating compound, transportation of all such material to the job site and all labour, tools,

equipment, and incidentals necessary to complete the work to the satisfaction of the Engineer. Foundation excavation, rock fill, gravels and water control will be paid for as separate items of work in accordance with other sections of the Standard Specifications.

8.2 Hardware. Hardware used in timber structures will be paid for at the contract unit bid price per kilogram for Miscellaneous Metal, which price shall include the supply and placing of nails, spikes, drift bolts, washers, iron, etc., and all labour, tools, equipment, transportation and incidentals necessary to complete the work to the satisfaction of the Engineer.

9.0 WARRANTY

SECTION 3 - STRUCTURAL STEEL

1.0 DESCRIPTION

This section details the supply, fabrication and delivery of structural steel to the site. This section also applies to the complete erection of the structural steel and all field work in conjunction with erection including field painting, erection and removal of all falsework and site clean up.

2.0 REFERENCES

All reference standards shall be current issue or latest revision at the first date of tender advertisement. This specification refers to the following standards, specifications or publications:

- ANSI/AASHTO/AWS, Specification D1.5 Bridge Welding Code and D1.1 Structural Welding Code- Steel
- ASTM A 242, Specification for High-Strength Low-Alloy Structural Steel
- ASTM A 325, Specification for High-Strength Bolts for Structural Steel Joints
- ASTM A 588, Specification for High-Strength Low-Alloy Structural Steel with 50 ksi Minimum Yield Point to 100 mm
- ASTM D 3359, Method for Measuring Adhesion by Test Tape
- ASTM D 4752, Test Method for Measuring MEK Resistance of Ethyl Silicate (Inorganic) Zinc-Rich Primers by Solvent Rub
- CGSB 1-GP-12C, Standard Paint Colours, Parts 1 to 3
- CGSB 1-GP-171M, Coating, Inorganic Zinc
- CGSB 1-GP-180Ma, Coating, Polyurethane, Two-Package, General Purpose
- CSA W59-M, Welded Steel Construction
- CSA W47.1, Certification of Companies for Fusion Welding of Steel Structures
- CSA W48 Series, Electrodes
- CSA-G40.20-M, General Requirements for Rolled or Welded Structural Quality Steel
- CSA-G40.21-M Structural Quality Steel
- CSA-S6 - Latest Edition, Canadian Highway Bridge Design Code
- CSA-S6.1- Latest Edition, Commentary on CSA Standard S6, Canadian Highway Bridge Design Code
- Division 5 section 17, Coatings for Steel Structures
- SSPC, (Steel Structure Painting Council), Steel Structures Painting Manuals - Volumes 1 and 2, "Good Painting Practice" and "Systems and Specifications"

3.0 SUBMISSIONS AND DESIGN REQUIREMENTS

The order of priority for the documents of this specification shall be:

- Reviewed Shop Drawings
- Special Provisions
- Structural Steel Standard Specification

3.1 Submissions. One month prior to the start of fabrication, the Fabricator shall submit seven copies to the Department, of the following documents:

- Verification of CSA W47.1 certification
- Welding procedures to be used for the shop fabrication
- General outline of schedule for fabrication
- Should the Contractor change the schedule for fabrication, where practical, they shall provide 24 hour notice to the Department to allow for additional inspection personnel
- Shop Drawings
- Structural Steel Erection Design

Prior to the start of welding, the Contractor shall submit to the Department:

- Material test reports for all materials
- Valid Canadian Welding Bureau certification for each welder and welding operator for the positions and processes intended

Prior to the start of coating operations, the Contractor shall submit Manufacturer's Specifications and product data sheets.

3.2 Shop Drawings

3.2.1 Review. Shop drawing review by the Designer is for the sole purpose of ascertaining conformance with the general design concept. This review shall not mean that the Designer approves the detail design inherent in the shop drawings, responsibility for which shall remain with the Fabricator submitting the shop drawings, and such review shall not relieve the Fabricator of the responsibility for meeting all requirements of the contract documents. The Contractor shall be responsible for dimensions to be confirmed and correlated at the job site, for information that pertains solely to fabrication processes or construction and for the installation of the work.

3.2.2 Details and Revisions. Shop drawings shall show the following details:

- Clear and obvious notes of any proposed changes from contract drawings and Specifications
- Fabrication and erection dimensions
- Details to indicate construction arrangements of the parts and their connections, and interconnections with other work
- Materials, coating system and finishes
- Dimensions and dimensioned locations of chases, sleeves, cuts, and holes in structural members

Shop drawings which require extensive correction will be sent back to the Contractor for revisions and resubmission, otherwise shop drawings will be sent back with review comments only. Only drawings noted for revision require resubmission.

New details or information added to shop drawings after they have been finally reviewed shall be approved by the Department.

If shop practice dictates that revisions to approved drawings are required, drawings shall be revised and resubmitted.

4.0 MATERIALS

All materials shall be supplied in new condition by the Contractor.

4.1 Structural Steel. All structural steel, with the exception of rolled angle, channels, WT shapes and sole plates, shall meet the requirements of CSA G40.21M Grade 350WT - Category 2 as specified on the plans.

All rolled angle shapes, sole plates and pintle assemblies shall conform to CSA G40.21M Grade 350A or ASTM A588.

4.2 Shear Stud Connectors. Shear stud connectors shall comply with CSA W59-M, Section 5. Acceptable studs are produced by Nelson Stud Welding or Continental Studwelding Limited.

4.3 Anchor Bolts. Anchor bolts shall conform to CSA G40.21M, Grade 300W and shall be hot dip galvanized.

4.4 Bolts, Nuts and Washers. Bolts, nuts and washers shall conform to ASTM A325M, Type 1.

4.5 Coatings. Please refer to Division 5 Section 17.

4.6 Welding Electrodes and Filler Metal. Welding electrodes shall conform to CSA W48.3, W48.4, W48.5 and W48.6. Filler metal shall be in accordance with Table 5-1, "Filler Requirements for Exposed Bare Applications of CAN3-G40.21-M 350A, 350AT, 400AT and ASTM A242 and A588 Steels" of the CSA W59 Specification.

Deposited weld metals in full penetration welds are required to have a minimum Charpy Impact Energy of 27 Joules at -30°C in accordance with Appendix A of CSA-S6. Certification shall be provided by the Contractor at no cost to the Department.

5.0 CONSTRUCTION METHODS

5.1 Fabrication. Fabrication shall not commence prior to the review of shop drawings by the Engineer or the Department’s representative. Any fabrication done without the reviewed shop drawings may be rejected. All steel

fabrication shall be done in accordance with CSA W59 and in accordance with the reviewed shop drawings.

5.2 Workmanship. Workmanship and finish shall be of the best modern general practice in the bridge fabrication and construction industry. Shearing, flame cutting and planing shall be done carefully and accurately. Particular attention shall be paid to the neatness and uniformity of finish of all parts of the work exposed to view.

5.3 Welding. The steel Fabricator shall be a member in good standing of the Canadian Institute of Steel Construction.

All welding shall be performed by companies certified by the Canadian Welding Bureau (CWB) in accordance with the requirements of CSA W47.1 Division 1. The company shall have the organization, personnel, welding procedures and equipment required to produce satisfactory welds and weldments consistent with good bridge engineering practices.

Except with the express consent of the Design Engineer, there shall be no temporary welds in primary tension members nor in tension flanges of beams or girders.

The tolerances for fabrication shall be as detailed in CSA W59 or other applicable specifications. For tolerances not specified, the tolerance shall be 3 mm or one half the material thickness, whichever is smaller.

5.4 Assembly. In the event that the Department's representative is not present at the fabrication facility the Contractor shall provide 24 hours notice to the Department's representative to allow for the witnessing and verification of the final camber/sweep. Bolted girder splices shall be trial assembled prior to shipment. Trial assembly shall be witnessed by the Department or it’s representative.

5.5 Protective Coating System. Please refer to Division 5 Section 17.

5.6 Transportation, On-Site Storage and Erection. Structural steel components shall be transported in such a manner so as to avoid development of fatigue cracks and deformation.

When the components are stored on the jobsite they shall be placed on timbers so that they do not make contact with the ground and are supported to avoid fatigue cracking, deformation or over stressing. They shall be stored in a location where they will not be subject to damage or surface contamination.

The Fabricator shall erect the whole of the fabricated structural steel work supplied under the contract. The Contractor shall supply all materials, tools, equipment, plant and labour necessary for the erection of the steelwork. The Fabricator shall erect the structural steel in accordance with the requirements of the AASHTO Specifications and CSA S6 specifications. Erection Design shall be prepared and stamped by a professional engineer registered to practice in Nova Scotia if erection requires more than a simple crane lift. Erection design shall be provided to the department for information.

After the structural steel and associated bracing has been erected, and before deck forming is started, elevations of the tops of the girders will be determined by the Department at intervals specified by the Engineer.

It shall be the Contractor's responsibility to provide, at their own expense, an experienced steel worker to do the necessary survey rod work involved in obtaining the elevations.

The in-place elevations will be reviewed by Department staff and approval given to the Contractor by the Engineer before the deck forming is commenced.

6.0 QUALITY CONTROL / QUALITY ASSURANCE

Inspection by the Engineer, or representative, may extend to all or any part of the works and to the preparation, fabrication or manufacture of any of the materials. Any work done or materials used without supervision or inspection may be ordered to be removed and replaced at the Contractor's expense.

6.1 Welding. The acceptance criteria for all inspections shall be based on CSA W 59, Section 12, Dynamic Steel Structures. All welds shall be visually inspected.

All full penetration welds, except those specified in webs, shall be 100% inspected by Radiographic or Ultrasonic methods. When welds are tested by the Ultrasonic method, spot Radiography shall be performed on 10% of those welds tested.

All full penetration welds in webs shall be inspected by Radiographic or Ultrasonic methods for at least 25% of the weld

length. The inspection shall be performed nearest the tension flange. If defects are identified, additional inspections shall be done to determine the extent of these defects.

Web-to-flange fillet welds shall be subject to magnetic particle inspection in accordance with the following:

- Submerged arc welds: 25 percent of length
- Semi-automatic welds: 50 percent of length
- Manual welds: 100 percent of length

Fillet welds for attaching gusset plates, diaphragms and stiffeners shall have 25 percent of the total weld length tested by magnetic particle inspection.

All gusset plates and stiffeners for attaching diaphragms and/or bracing shall be tested for 100 percent of the weld length, from the mid-depth of the web to the tension flange.

6.2 Coatings. Please refer to Division 5 Section 17.

6.3 Dimensions. The dimensions of all structural members including the overall girder, girder splices, bracing and diaphragms shall be inspected for compliance with the approved shop drawings. In addition any camber specified for girders shall be verified.

Contractor shall provide vertical profiles at the centerline of each girder top flange after erection. Profiles shall be provided to engineer for review.

7.0 METHOD OF MEASUREMENT

The preparation of all shop drawings, erection drawings, welding procedures, calculations, etc., shall not be measured for payment but shall be considered as incidental to the work.

The furnishing of certified test reports for the qualification of paint manufacturers, if deemed necessary by the Engineer, shall not be measured for payment but shall be considered as incidental to the work.

The supply of any additional structural steel not shown on the drawings, deemed necessary for the erection condition, including falsework and guys that may be required to maintain stability, shall not be measured for payment but shall be considered as incidental to the work.

8.0 BASIS OF PAYMENT

Structural steel will be paid for at the contract lump sum bid price for Structural Steel which price shall include all labour, equipment and materials required for the supply, fabrication, surface preparation, coating, loading, shipping, delivery and erection of the complete steel superstructure in accordance with the plans and Specifications.

The cost of additional inspection and testing made necessary by the Contractor's work not meeting these specifications shall be the responsibility of the Contractor.

The Contractor may be granted partial progress payments as determined by the Engineer for this item on the basis of committed materials delivered to the Fabricator's shop and for fabrication satisfactorily completed.

The Engineer's decision as to the value of the work completed for partial progress payment shall be final. Upon payment, the material (before and after fabrication) for which payment has been made shall become the property of the Department with the Contractor assuming full responsibility for safe storage and transport to the erection site.

9.0 WARRANTY

SECTION 4 - MISCELLANEOUS METAL

1.0 DESCRIPTION

This section details the supply, fabrication and erection of all miscellaneous metal, including deck drains, not specifically referred to elsewhere in these specifications or Special Provisions, as shown on the plans or as directed by the Engineer.

2.0 REFERENCES

All reference standards shall be current issue or latest revision at the first date of tender advertisement. This specification refers to the following standards, specifications or publications:

- CSA-G164-M, Hot Dip Galvanizing of Irregularly Shaped Articles

3.0 SUBMISSIONS AND DESIGN REQUIREMENTS

4.0 MATERIALS

Miscellaneous metal shall include the following: anchors, bolts, nuts, bearing plates, expansion plates, metal conduits, scuppers, pipes, drains, lead, and similar metal items not specifically referred to elsewhere in these specifications or Special Provisions, regardless of the type of metal specified.

All miscellaneous metal shall be subject to the approval of the Engineer as to their type, make, and finish; and this item shall include all necessary shop and field work such as machining, drilling, reaming, cutting, welding, and any other work that may be required to be done on these materials, subject to the approval of the Engineer. All material shall be new materials.

All items shall be galvanized in accordance with CSA -G164-M. A minimum of 763 g/m^2 of zinc is required on the surface of all galvanized sections.

5.0 CONSTRUCTION METHODS

All anchors, whether for the main structure or for railings, shall be carefully and accurately set as shown on the plans or as directed by the Engineer. In case anchor bolts have to be set or reset in concrete, holes shall be drilled in the concrete and anchor bolts placed and secured in place with portland cement grout, or by other means, where and as directed by the Engineer.

6.0 QUALITY CONTROL / QUALITY ASSURANCE

All miscellaneous metal shall be inspected and approved by the Engineer before being used.

7.0 METHOD OF MEASUREMENT

The weight of miscellaneous metal shall be the total computed weight in kilograms of the various parts and to the finished dimensions as shown on the plans or as directed by the Engineer in writing. Deductions shall be made for all cuts, copes and open holes. No allowance in weight shall be made for galvanizing, painting or for welding rods and any metal used temporarily and not forming part of the completed structure. The weight of rolled shapes and of plates up to and including 900 mm in width shall be computed on the basis of the nominal weight and dimensions.

The weights of all other miscellaneous metal shall be based on the following table:

Table 5.4.1 - Miscellaneous Metal

Metal	Unit Weight (kg/m^3)
Aluminum	2755
Brass, Bronze	8490
Copper	8890
Iron, cast	7208
Iron, wrought	7800
Lead	11 373
Steel, all kinds	7850
Tin	7290
Zinc	7208

8.0 BASIS OF PAYMENT

Miscellaneous metal will be paid for at the contract unit bid price per kilogram for Miscellaneous Metal complete in place which price shall include supply and placing of all materials, and all equipment, tools, labour, shop, transportation, and incidentals necessary to complete the work to the satisfaction of the Engineer.

9.0 WARRANTY

SECTION 5 - REINFORCING

1.0 DESCRIPTION

This section details the supply, delivery and placing of uncoated, galvanized and Glass Fibre Reinforced Polymer (GFRP) Reinforcing as shown on the plans or as directed by the Engineer.

2.0 REFERENCES

All reference standards shall be current issue or latest revision at the first date of tender advertisement. This specification refers to the following standards, specifications or publications:

- CSA-G30.18M, Billet Steel Bars for Concrete Reinforcement, Grade 400
- CSA-A23.3, Design of Concrete Structures
- ASTM A780, Repair of Damaged and Uncoated Areas of Hot-Dip Galvanized Coatings.
- CSA-G164-Latest Edition, Hot Dip Galvanizing of Irregularly Shaped Articles.
- CSA A23.1/A23.2, Concrete Materials and Methods of Concrete Construction/Methods of Test for Concrete.
- ASTM A143/A143M, Safeguard Against Embrittlement of Hot-Dipped Structural Steel Products and Procedure for Detecting Embrittlement
- CSA-S6-Latest Edition, Canadian Highway Bridge Design Code
- CSA-S6.1-Latest Edition M90, Commentary on CSA Standard S6, Canadian Highway Bridge Design Code
- CSA S806-Latest Edition: Design and Construction of Building Structures with Fibre-Reinforced Polymers
- CSA S807-Latest Edition: Specifications for Fibre-Reinforced Polymers
- The Reinforcing Steel Institute of Canada (RSIC), Reinforcing Steel Manual of Standard Practice

3.0 SUBMISSIONS AND DESIGN REQUIREMENTS

3.1 Bridge Construction. All reinforcing steel used in cast in place concrete for new construction shall be hot dipped galvanized in accordance with CSA-G164-Latest Edition, and/or Glass Fibre Reinforced Polymer (GFRP) Reinforcing in accordance with CSA S807-Latest Edition: Specifications for Fibre-Reinforced Polymers unless otherwise approved by the engineer.

3.2 Submissions. At least four (4) weeks prior to commencing fabrication, the Contractor shall submit shop drawings directly to the department for review and approval. Fabrication shall not proceed until the final approval of shop drawings. Shop drawings shall be stamped by an Engineer registered to practice in Nova Scotia. Shop drawings shall include all bar sizes, locations, spacing's, shapes, finish, pin diameters used for bar bends, etc. Bend diameters shall be in accordance with Table 5.1.

A reinforcing bar schedule shall be included and all detailing shall be in accordance with the RSIC Reinforcing Steel Manual of Standard Practice and the Departments Standard Specification.

4.0 MATERIALS

4.1 Reinforcing Steel. All reinforcing steel shall be deformed and shall conform to CSA-G30.18M and CSA A23.1/A23.2, Grade 400W (Weldable).

4.2 Galvanized Reinforcing Steel. Galvanized Reinforcing Steel shall be hot dipped galvanized in accordance with CSA-G164-M92. Galvanized Reinforcing Steel shall conform to ASTM A143/A143M. Upon request of the Engineer, test results for embrittlement shall be provided in advance of placement. All minor damage to the galvanizing shall be repaired as per ASTM A780.

4.3 GFRP Reinforcing. All GFRP reinforcement shall conform to CSA S807-Latest Edition and CSA-S6-Latest Edition, Canadian Highway Bridge Design Code. Bars shall have a minimum tensile strength of 1000 MPa and a minimum modulus of elasticity of 60 GPa. The surface of the bars shall be deformed or sand coated.

4.4 Mill Certificates. The Contractor shall provide mill certificates to the Engineer at least two weeks in advance of placement.

5.0 CONSTRUCTION METHODS

5.1 General. All reinforcing bars shall have the necessary net sectional area, and shall be cut to the exact lengths, and

bent to the exact forms and dimensions, shown on the approved plans, or otherwise required, before being placed in position. Reinforcing shall not be bent cold or in the field. Bending shall be accurately done, in a bending machine and no welding or heating of any bars shall be allowed, except with written approval from the Engineer. All stirrups and hoops shall accurately fit the rods, and all bends shall be taken out of bars to be used as straight members.

All reinforcing bars shall be placed and held rigidly in the exact positions in the forms as shown on the approved plans, or otherwise required, and there shall be no displacement of the same by the placing and tamping of the concrete. Reinforcement shall be supported as per manufacturer's recommendations using non-corrosive chairs. Adjusting or moving the bars, while the concrete is being placed, shall not be permitted, unless specified on the plans. Concrete protection required for reinforcing steel shall be in accordance with the plans, Department Specifications, or CSA-A23.3. All bars shall be tied and properly braced to prevent displacement. No concrete shall be placed until the reinforcement, after being cleaned and placed in position, has been examined and approved by the Engineer or representative.

The minimum bend diameter shall conform to the Table 5.1. Bending of galvanized or reinforcing steel will not be permitted after coating.

The yield strength of bent GFRP reinforcing bars must be at least 400 MPa at the bend in accordance with CSA-S806, Annex E, Test Method for FRP Bent Bars and FRP Stirrups. Field bending of GFRP bars is not permitted.

Table 5.1

Minimum Bend Diameter for Reinforcing Steel (400W), Galvanized and Uncoated Bar	
Bar Size(mm)	**Bend Diameter(mm)**
10	70
15	90
20	150
25	200
30	250
35	300
45	450
55	600

5.2 Tying Reinforcing. All tie-wires, chairs and bar supports and other material used for the installation of galvanized reinforcing bars shall be covered, either with powdered epoxy resin or acceptable material, at all contact points and within 50 mm of exposed faces, or be comprised of an acceptable non-metallic material. For uncoated steel reinforcing bars, plain tie-wire is acceptable.

GFRP reinforcing bars shall be fastened together at all joints and intersections using coated tie wire, stainless steel, plastic, or nylon ties. GRRP bars shall be accurately placed in the positions shown in the shop drawings and held in the correct location during the operations of placing and consolidating concrete. Bars shall be supported as per manufacturer's recommendations using non-corrosive chairs.

GFRP Bars shall be tied at least at every third intersection. The maximum untied length of any bar shall be 900 mm. Bar support chairs shall not exceed 900 mm average spacing in each direction.

GFRP bars within the formwork shall be secured to prevent movement during concrete placement. The bars shall be supported or tied to resist settlement, floating upward, or movement in any direction during concrete placement. For overlays and other horizontal placement where there is no bottom mat of steel reinforcement to tie down the GFRP, the GFRP mat shall be anchored down directly to the concrete or formwork to prevent it from floating upward.

For lapping uncoated reinforcing steel bars at the joints and intersections, an ample supply of annealed wire at least

1.5 mm in diameter shall be provided. Proper cutting pliers shall be used and the bending and tying of the wires done as neatly as possible.

5.3 GFRP Reinforcing. Obtain Engineer's approval for any substitution or modification to reinforcement shown including substitution of alternative bar marks due to limitations in the manufacturing system. Substitute different bar sizes only if permitted in writing by the Engineer. Do not substitute steel reinforcing for GFRP reinforcing.

Ship bundles of bar reinforcement, clearly identified in accordance with bar bending details and lists. All GFRP bars shall be legibly stamped by the manufacturer with the following information at no more than 2.0 m spacing for straight bars, and at least once for bent bars and anchor headed bars: Manufacturer's name and symbol, type of fibre, designated bar diameter, grade designation, designated modulus of elasticity, and production lot or batch number, and bend fabrication method (where applicable).

The Contractor shall transport, handle, lift and store the GFRP reinforcing bars according to the manufacturer's recommendations to ensure they are not damaged or contaminated with dirt or other materials. The GFRP bars shall be covered with opaque white polythene during storage. When the exposure time is expected to exceed or exceeds 30 days, exposed GFRP bars installed in the structure, or formwork, including bars partially embedded in concrete, shall be protected from the elements by covering with opaque polyethylene sheeting or equivalent protective material. The protection shall be adequately supported and secured in place. This protection shall be maintained until its removal is required for preparation for subsequent concrete placement.

All reinforcement and accessories shall be kept clean of all mud, oil and other deleterious materials and stored clear of ground contact. Delivery, storage and handling of GFRP bars shall be in accordance with the manufacturer's instructions to prevent damage.

The GFRP bars shall be uniform in diameter/size and free of defects that would be detrimental to the mechanical properties and durability. The surface finish shall be uniform, free of voids and air pockets, and similar to the product tested for qualification. Defects include, but are not limited to, exposed fibres, cracks, kinks, surface pitting, and discoloration.

The bars shall be lifted using multiple pickup points to prevent sags. Nylon slings or padded wire rope slings shall be used to lift bars. Lifting of bundles of bars shall be with a strong back, spreader bar, multiple supports or a platform bridge. The bars shall not be dragged or dropped.

The bars shall be stored clear of the ground on timbers or other suitable protective cribbing spaced to prevent sags in the bundles. Stacks of bundles of straight bars shall have adequate blocking to prevent contact between the layers of bundles.

GFRP bars shall be stored separately from reinforcing steel bars, with the bar tags maintained and clearly visible until ready for placing.

GFRP bars shall not be dragged against other GFRP or other steel reinforcement. Bent bars shall not be field cut. Field cutting of straight bars will be permitted only with the approval of the Engineer. The field cutting shall be with a high speed cutter, fine blade saw, diamond blade or masonry saw. The bars shall not be shear cut.

Examine all formwork to ensure that it has been completed and adequately braced in place before starting reinforcement placing. Replace bars which develop cracks or splits. Take care to ensure that the position of the bars does not alter during concreting and that the correct cover is maintained at all times. Prior to placing concrete, obtain Engineer's approval of the reinforcing material and placement. Clean all reinforcing of deleterious material before and after erection.

All GFRP bars in the same structural component shall be supplied by the same manufacturer; there shall be no mixing of products from different manufacturers in a component unless permitted in the Contract Drawings.

GFRP at the top mat of a deck slab, after placing, shall be protected from construction traffic such that the finishing is not damaged.

GFRP bars at the time the concrete is placed shall be free of mud, oil, concrete or other contaminants, and surface finish defects that adversely affect bonding strength or other properties. All formwork shall be cleaned prior to concrete pour.

6.0 QUALITY CONTROL / QUALITY ASSURANCE

After all reinforcing is in place a final inspection shall be made to locate any damage or deficiencies. All visible damage or any deficiencies shall be repaired to the satisfaction of the Engineer before the concrete is poured.

All GFRP materials shall meet the mechanical, physical and durability properties required by this specification.

7.0 METHOD OF MEASUREMENT

Delivery and placement of all Reinforcing Steel shall be measured for payment by the kilogram. The total mass is to be determined based on the actual length of bar accepted for payment and the mass per unit of length as stated in CSA-G30.18M or ASTM A 615M.

8.0 BASIS OF PAYMENT

Reinforcing steel will be paid for by one of the following:

- The contract unit bid price per kilogram for: Uncoated Reinforcing Steel Delivered and Placed or Galvanized Reinforcing Steel Delivered and Placed which shall include all materials, transportation, equipment, plant, tools, labour and incidentals necessary to complete the job to the satisfaction of the Engineer. No allowance will be made for the clips, wire or other mechanical means for fastening the uncoated or galvanized reinforcing steel in place.

- The contract lump sum bid price which shall include but not be limited to: shop drawings, the supply, delivery, and installation of reinforcing steel as herein specified. For galvanized reinforcing, galvanizing is considered incidental for payment purposes.

Payment shall be based on the uncoated theoretical weight/length published in the Canadian Reinforcing Institute Manual of Standard Practice for any type of reinforcing steel.

The Contractor shall be responsible for the reinforcing steel during transportation and after delivery to the job site until the complete structure has been accepted by the Engineer. The Department will not be liable for the replacement of any parts if such becomes necessary at any time during the contract.

9.0 WARRANTY

SECTION 6 - STEEL GUARD RAIL SYSTEMS AND WOODEN GUIDE POSTS

1.0 DESCRIPTION

This section details the supply, erection, removal, salvage and reinstallation or disposal, and adjustment of galvanized steel guard rail systems, treated wooden guide posts, EAGRT Systems and all related materials.

A guard rail system includes all rail elements, related hardware, reflectors, posts and blocks and is used to protect the motorist from a roadside hazard.

2.0 REFERENCES

All reference standards shall be current issue or latest revision at the first date of tender advertisement. This specification refers to the following standards, specifications or publications:

- ASTM A 307, Specification for Carbon Steel Bolts and Studs 60,000 psi Tensile Strength
- CSA-080, Wood Preservation
- CAN/CSA-G40.20/G40.21, General Requirements for Rolled or Welded Structural Quality Steel/ Structural Quality Steels
- AASHTO M180, Corrugated Sheet Steel Beams for Highway Guardrail
- CSA-G164-M, Hot Dip Galvanizing of Irregularly Shaped Articles
- ASTM A780, Standard Practice for Repair of Damaged and Uncoated Areas of Hot-Dip Galvanized Coatings
- ASTM E316.3, Magnetic Gauge Testing of Galvanizing Coating
- CSA-S136, Cold Formed Steel Structural Members
- CSA-W59, Welded Steel Construction (Metal Arc Welding)
- Drawings S-2009-071 to S-2009-076.
- National Lumber Grades Authority (NLGA), Standard Grading Rules for Canadian Lumber
- NCHRP Report 350 - Recommended Procedures for the Safety Performance Evaluation of Highway Features
- FHWA Technical Advisory T5040.33
- AASHTO Roadside Design Guide, 2002
- CSA - G40.21 - M, Structural Quality Steels

3.0 SUBMISSIONS AND DESIGN REQUIREMENTS

The Contractor shall submit, upon request, prior to incorporating the material in the Work, the product name and manufacturer's specifications for the preservative to be applied to the post field cuts and zinc-rich paint to repair minor damage to galvanized coating, and to coat cut ends and field drilled holes.

The Contractor shall submit, upon request and in advance of the commencement of the Work, the manufacturer's certification that the materials supplied meet the specified requirements as detailed on the Contract Documents.

3.1 Energy-Absorbing Guide Rail Terminal (EAGRT) System. If Energy - Absorbing Guide Rail Terminal (EAGRT) systems are used the contractor shall submit, at least 14 days in advance of the work, the type of EAGRT system proposed for the work, the name of the manufacturer, and at least three copies of Shop Drawings stamped by a professional Engineer clearly showing in detail the components and installation of the system.

Certified test results, meeting requirements of NCHRP 350, TL-3 for redirective, gating terminals.

Prior to delivery of the EAGRT systems to the Work Site, the contractor shall submit written certification that they have been designed to meet the requirements of NCHRP Report 350 for the required Test Level; they have been fabricated of materials consistent with the design; and will function as designed. The test level is determined by the design speed as indicated in the table below:

Test Level (TL)	Design Speed (km/h)
TL-1	50
TL-2	70
TL-3	100

The manufacturer shall certify that their system is compatible with any horizontal curves that may be present at the installation site.

3.2 Guide Posts. Prior to order and installation of flexible guide posts, the Contractor shall provide a complete report of the physical properties of the post to the Engineer. The report shall include properties such as low temperature impact resistance, after-impact recoverability and weather resistance.

4.0 MATERIALS

Unless noted otherwise, all materials shall be supplied by the Contractor. When the Contract specifies the removal, salvage and reinstallation of guard rail, only materials from the existing installations shall be used. Contractor stockpiles of used material from other sources will not be considered acceptable.

4.1 Posts and Blocks. The acceptable species for guard rail posts and guide posts and blocks shall be:

- Eastern hemlock
- Red Pine
- Mixed Hardwood (birch, maple, oak or ash)

The posts shall be sound and rot-free, and shall conform with the requirements for No. 1 Structural Posts and Timbers, graded in accordance with the National Lumber Grading Authority (NLGA) Standard Grading Rules for Canadian Lumber. Posts and blocks shall be subject to inspection by the Engineer when the bundles are opened immediately prior to use.

The dimensions of eastern hemlock or red pine (softwood) guard rail posts shall be 200 x 200 x 2100 mm and hardwood guard rail posts shall be 150 x 200 x 2100 mm. Matching softwood blocks shall be 200 x 200 x 440 mm and matching hardwood blocks shall be 150 x 200 x 440 mm as shown on Drawing S-2009-071 in Division 8 of these specifications. The tops of wooden posts shall be cut as specified.

The dimensions of wooden guide posts shall be 140 x 140 x 1800 mm. Guide posts shall extend 1000 mm into the ground below the finished grade.

Post delineators shall be supplied by the Department free of charge from the Truro Sign Shop.

Prior to pressure-treating, posts and blocks shall be incised on all four sides and dried to their fibre saturation point of 25 to 30% at 25 mm depth.

For pressure treating, preservative treatment of posts and blocks shall be chromated copper arsenate (CCA). For field cut surfaces, preservative shall be 2% copper naphthenate wood preservative, applied in two coats.

Posts and blocks shall be bored as shown on plan HS519 in Division 8 of these specifications before treatment. Upon completion of treatment, all excess material shall be removed from the surface prior to shipping.

Treatment shall be completed in accordance with requirements of CSA-080. The penetration and retention of preservatives shall conform to the requirements of CSA Standard O80.14, Table 1, Minimum Retention of Preservatives in Pressure Treated Wood for Highway Construction, under the headings “Post-Guardrail, Guide, Sign and Sight” for posts, and “Bridge Hand Rails, Guard Rails and Posts” (not in contact with ground or water). The Engineer may verify the penetration and retention of the preservative by the assay method.

4.2 Guard Rail Units

4.2.1 Beam. The rails and terminal elements shall be manufactured from open hearth, electric furnace or basic oxygen semi-spring steel sheet and hot dip galvanized after fabrication. The steel beam shall be in accordance with the cross-section and dimensions as shown on plan S-2009-071 in Division 8 of these specifications. The rail shall be Class A, Type 2, W-beam steel beams, conforming to AASHTO M180.

Rails shall be punched for splice and post bolts in strict conformity with the AASHTO Standard to the designated number and centre-to-centre spacing of posts. No punching, cutting or welding will be permitted on site.

Each beam element shall be identified by the following marking in accordance with AASHTO M 180:

- Name or brand of manufacturer,
- Identification symbols or code for heat,
- Number and coating lot,
- AASHTO specification number, and
- Class, type, and thickness

If any guard rail installation requires curved W-beam rails, the Contractor shall form these to the radius specified by the Engineer prior to galvanizing.

The rails and terminal elements shall be manufactured according to the following standards:

- Mechanical properties of the base metal for the rails shall conform to the following requirements:
  - Minimum Yield Point: 345 MPa
  - Minimum Tensile Strength: 483 MPa
  - Minimum Elongation: 12% in 50 mm length
- Sheet thickness shall be in accordance with Table 2 (Class A, Type 2) of AASHTO Standard M180 of the latest edition, with a nominal base metal thickness of 2.82 mm (2.59 mm minimum).

Welding for the fabrication of terminal elements shall conform to the requirements of CSA-W59.

4.2.2 Channel. The steel channel shall be manufactured to the cross-section and dimensions as shown on plan S-2009-075 in Division 8 of these specifications. The channel shall be a cold-rolled steel section, manufactured from base metal with a minimum thickness of 3.8 mm and conforming to CSA-S136 and providing at least 345 MPa yield strength. Sections shall be hot-dip galvanized according to CSA -G164-M.

If any guard rail installation requires curved channels, the Contractor shall form these to the radius specified by the Engineer prior to galvanizing.

4.2.3 Bolts, Nuts and Washers. All bolts, nuts and washers shall conform to ASTM A 307 and shall be hot dip galvanized conforming to CSA-G164-M.

4.2.4 Hot Dip Galvanizing. Hot dip galvanized coating shall be smooth, free of beading or sharp projections at edges. Coating adherence shall prevent the peeling of any portion of the zinc coating so as to expose the base metal by cutting or prying with a stout knife under considerable pressure (bond check). A magnetic gauge will be used for checking thickness, in accordance with ASTM Standard E316.38.

Warped or otherwise deformed rails and terminal elements will be rejected, as will those with injurious defects or excessive roughness of the zinc coating. When the rail is laid on a flat surface, the warpage shall not be greater than 50 mm.

4.3 Energy-Absorbing Guide Rail Terminal (EAGRT) System. The EAGRT systems shall meet the requirements of National Cooperative Highway Research Program (NCHRP) Report 350, Test Level 3.

All EAGRT systems shall be the straight type.

All blocks shall be wood or plastic as referenced in NCHRP 350 Test Level 3.

Retroflective tabs shall be installed on all posts. Yellow tabs shall be installed for all median installations and white tabs on all outside lane posts.

Only proprietary EAGRT systems approved by the Department will be acceptable. The approved systems are:

- Road system Inc., Big Spring, Texas.
- Trinity Industries Inc., Dallas, Texas.

“Mixing and Matching” of parts are not acceptable.

All posts shall be a steel “breakaway” type designed for the EAGRT system to be supplied on the contract.

A yellow and black hazard marker, minimum 300 mm x 600 mm and made from 3M Hi-Intensity reflective sheeting or equivalent, shall be supplied with each EAGRT. The manufacturer shall be consulted prior to the installation of hazard markers (if installed on the impact head) to ensure that these installations will not comprise the performance of the end treatment system.

Backfill material shall be the material excavated form the Roadbed for the installation of the EAGRT system, or the material otherwise specified by the manufacturer

4.4 Guide Posts. Flexible guide posts shall be constructed of materials which return to upright positions following repeated impacts and passages of vehicles over them. Such collisions shall not cause serious damage to the post or vehicle. Failure to conform to these requirements specified herein shall be cause for rejection. The posts shall be of uniform high quality and workmanship and be free from defects.

The round flexible posts shall have a minimum outer diameter of 90 mm and an overall length of 1.67 metres. The semi flat flexible posts shall have a minimum width of 90 mm and an overall length of 1.67 metres. The top 250 mm of the post length shall be black and the remainder shall be white. The posts shall be straight - no point along the post shall be any more than 6 mm removed from a perfectly straight edge placed parallel to any side of the post. Round posts shall be open at the top and the bottom. The surface of the post shall be free from irregularities or defects. The surface of the post shall not be affected by cleaning using scrapers, detergent and water, or solvent. The black portion of the post shall accept and securely hold high-intensity reflectorized sheeting applied to its surface with heavy-duty stainless steel staples, glue or other adhesives deemed suitable by the manufacturer. If one piece construction is not used, then the connections between the pieces shall be at least as strong as if constructed of a single piece. The strength shall exist at temperatures ranging from - 50°C to + 50°C.

The post shall not be seriously affected by ozone, exhaust fumes, asphalt or road oils, dirt, vegetation, de-icing salts or any other types of air contamination or materials likely to be encountered after installation. The posts shall withstand without serous damage all elements likely to be encountered after installation including extremes of temperature (+50°C to - 50°C), rain, snow, hail, abrasion, and physical abuse.

The posts shall resist, without breaking, tearing, shattering or other serious damage, one highway vehicle impact at a speed of 100 km/hour at a test temperature of - 33°C. The post shall not bend, warp or distort when installed at temperatures up to + 50°C or installed in wind velocities up to 120 km/hour.

Each post shall have a 50 mm wide high-intensity white, reflectorized sheeting material (3M#9880 Scotchlite or equivalent) installed between 100 mm and 150 mm from the top of the post. Reflectorized material shall only be visible from one face.

5.0 CONSTRUCTION METHODS

5.1 Installation. Prior to commencing work, the Engineer shall locate in the field all proposed areas for installing new guard rail including special or curved installations. These locations shall be reviewed by the Contractor, with the Engineer, to confirm locations and extents. The contractor shall contact the Project Engineer 24 hours prior to any work being done.

The Contractor shall erect Steel Guard Rail in accordance with the following plans located in Division 8 of these specifications:

- S-2009-071 Guard Rail and Post Details
- HS519 Guard Rail Post Details
- S-2009-072 Steel Beam Guard Rail Buried End Treatment
- S-2009-073 Roadside Barrier At Concrete Bridge Approach
- S-2009-074 Michigan Shoe Details
- S-2009-075 Guard Rail Channel Details
- S-2009-076 Guardrail Mitigation of Roadside Hazards
- S-2009-078 Guardrail Anchor Base on Concrete

Guard rail installations designated by the Department as “strong post” require a post spacing of 1.905 m and the W-beam railing shall be blocked out at posts in accordance with plans HS519 and S-2009-073 in these specifications.

Bridge approach and departure guard rail shall consist of four standard W-beam elements at each end and each side of bridges, unless shown otherwise on the contract drawings, or as directed by the Engineer. Additional posts shall be placed at the mid-point of the first three lengths of guard rail adjacent to the ends of bridges and at the quarter points of the guard rail sections adjacent to the ends of bridges as shown on plan S-2009-073 in Division 8 of these specifications. Also, blocks shall be installed on each post for the first five lengths of guard rail adjacent to the ends of bridges. Posts shall only be located at the standard bolt hole locations in the standard W-beam elements, other than

for bridge approach/departure guard rail, where posts are required at quarter points.

To maintain consistency throughout a project, only one size post and block shall be used on any one section of a contract. 200 x 200 x 440 mm blocks shall only be used with 200 x 200 x 2100 mm posts and 150 x 200 x 440 mm blocks shall only be used with 150 x 200 x 2100 mm posts.

In addition to being used to support steel guard rail sections, posts may be used alone for shoulder delineation. In both cases, posts shall be placed at such distance as to conform to the alignment of the road, or as directed by the Engineer. Post holes shall be dug and/or augured and posts set to a depth of 1320 mm below grade, following horizontal lines, vertical lines and grades as shown on the plans. Care shall be exercised when installing posts to minimize disturbance to the shoulder. The backfill material shall be the same material that is excavated for the post and it shall be well compacted to the satisfaction of the Engineer.

Unsuitable material at the bottom of the holes excavated for guard rail shall be replaced with granular material, as directed by the Engineer. The Contractor shall thoroughly compact the bottom of the hole. The guard rail posts shall rest directly and solidly on the bottom of the hole at the time of installation.

Excavated material which is unsuitable for use as a backfill shall be substituted with granular material, as directed by the Engineer. Backfill shall be thoroughly compacted, in layers not exceeding 150 mm, for the full depth of the excavation. For augured post installation, hand compaction of backfill in layers not exceeding 150 mm is acceptable.

Care shall be taken during the transport, treatment and handling of posts and blocks to prevent damage. Any damage occurring to the posts and blocks prior to delivery and during delivery and installation shall be repaired to the satisfaction of the Engineer and shall be considered as incidental to construction for the purpose of payment.

No alterations to treated posts and blocks shall be permitted without the approval of the Engineer. Blocks shall not be manufactured from posts. Any exposed cuts shall be treated with two coats of 2% copper naphthenate wood preservative. Field applied wood preservative which comes in contact with any galvanized components shall be removed immediately.

Guard rail and guide posts shall be installed plumb, and set according to alignment and grade, regardless of the material encountered, as shown on the drawings or as directed by the Engineer. The rail elements shall be erected to produce a smooth continuous rail paralleling the line and grade of the highway surface as directed by the Engineer. All rail elements shall be lapped in the direction of traffic.

Standard W-beam rail sections shall not be modified to suit post locations; posts shall be located to match W-beam pre-punched bolt hole locations. If Contractor wishes to use two crews, on a given section, the crews shall work from the middle of the job outwards to avoid modifications of standard W-beam rail sections due to varying post spacings. Only at the approval of the engineer, can holes be drilled or cuts be made to W-beam rail sections. Holes and cut ends shall be treated with a zinc-rich paint that has been approved by the Engineer. Bolts shall be tightened to a torque of 100 Nm.

Two 50 mm x 75 mm delineators are required for each post. A white delineator shall be placed on the side of the post facing traffic; a yellow delineator shall be placed on the opposite side. The delineators shall be located at the edge of the post nearest the road, vertical, with the top 75 mm below the lowest point of the guard rail panel. The delineators shall be attached with galvanized nails. (See Figure 5.1.1)



Figure 5.1.1 - Delineators

The Contractor shall take all necessary precautions to eliminate damage to galvanizing. Cut ends, field drilled holes (permitted on bridge approach/departure elements only) and other areas where the galvanizing has minor damage shall be repaired with a minimum of two coats of zinc-rich paint according to ASTM A 780, at no additional cost to the Department. The coating thickness for the repair shall at least comply with the requirements of AASHTO M180 respecting hot dip galvanizing. Major abrasions shall be repaired by re-galvanizing. The method to be used for repair of any damage shall be approved by the Engineer before such work is commenced. The Contractor, at their cost, shall carry out the repair or replace components to the satisfaction of the Engineer.

All damage to pavement, shoulders, ditches, slopes, lawns and any other surfaces and areas within or outside of the Department's right-of-way, arising from the Contractor's work, shall be repaired to the satisfaction of the Engineer, within five working days, at the expense of the Contractor.

The guard rail shall be connected to new or existing bridge walls or parapets as shown on the drawings. Surplus excavated material and debris shall be removed from the site by the Contractor, at their expense.

All end termination of guard rail installations shall be buried as shown on plan S-2009-072 in these specifications, unless otherwise directed by the Engineer. For divided highways and ramps, the guardrail opposite the direction of traffic, shall not be buried.

5.2 Energy-Absorbing Guide Rail Terminal (EAGRT) System. The Contractor shall carry out the Work as indicated in the Contract Documents and /or as specifically directed by the Engineer.

The Work shall be carried out as indicated in the Shop Drawings.

The impact end of each EAGRT system may be offset up to 300 mm away from the line of the guide rail installation if the line is not on a curve, as determined by the Engineer. The manufacturer shall be consulted prior to any offset to ensure that the offset will not compromise the performance of the end treatment system.

The impact head of each EAGRT shall be cleaned thoroughly as recommended by the manufacturer of the reflective sheeting hazard marker.

The hazard marker shall be secured squarely to the impact head.

The Contractor shall ensure that no obstructions are present behind the gated portion of the end treatment. The Contractor shall ensure a smooth run-out are is provided to accommodate vehicles passing through the gating terminal.

The installation shall be carried out in a manner so as to avoid damage to the adjacent and surrounding Roadway. The Contractor shall be responsible, at their own expense, to repair any such damage resulting from the Work.

Areas around guide posts shall be backfilled with approved material, compacted during placement and shall be finished to match the surrounding grade.

For Highways in use by the public, the installation of any EAGRT system shall be performed within 2 Days of the guide rail installation to which is will be attached.

5.3 Removal/Salvage/Adjustment/Repair. Wooden posts and steel guard rail systems shall be removed where and as directed by the Engineer and shall be stored for future use at the nearest Department Depot or where directed by the Engineer and to the satisfaction of the Engineer. The Contractor shall fill and compact all holes left from post removal with gravel type 1S before nightfall.

Steel guard rail systems shall be adjusted/repaired according to the lines and grades as directed by the Engineer. This operation shall consist of removal or adjustment of the damaged or misaligned steel guard rail system components, discarding those that are damaged beyond repair, repairing those as required and replacing the necessary components with either repaired or new components as directed by the Engineer. Adjustment is the raising or lowering of guardrail to meet the finished grade of roadway surface.

The Engineer will decide which guard rail system components are reusable and which are to be discarded and shall

provide a list to the contractor of salvageable components in the pre-job meeting. Material damaged by the Contractor during removal shall be replaced with new material by the Contractor at their own expense.

Every effort shall be made to avoid damage to reusable guard rail system components during the removal operation, especially the galvanized surfaces. The use of heat to remove bolts and the cutting of rail sections and bolts shall not be permitted unless approved by the Engineer.

Any minor damage to galvanized surfaces as a result of the removal or repair operations shall be repaired with a minimum of two coats of zinc-rich paint according to ASTM A 780, at no additional cost to the Department. The coating thickness for the repair shall at least comply with the requirements of AASHTO M180 respecting hot dip galvanizing.

Damaged posts and blocks shall be treated with two coats of 2% copper naphthenate wood preservative. Field applied wood preservative which comes in contact with any galvanized components shall be removed immediately.

To maintain consistency throughout a project, damaged posts and blocks shall be replaced with the same size posts and blocks in accordance with plan S-2009-071. Removal of steel guard rail shall include rough grading of the existing shoulder (in areas where guard has been removed) prior to placement of Gravel Type 1S and installation of new steel guard rail. Rough grading shall be as directed by the Engineer.

All materials designated for removal and disposal, those damaged during removal and any materials not required for reinstallation as determined by the Engineer, shall become the property of the Contractor and shall be disposed of in an approved manner and location, satisfactory to the Engineer, at the Contractor's own expense

6.0 QUALITY CONTROL / QUALITY ASSURANCE

The contractor shall provide a quality control program for posts and blocks. Contractors, at their own expense, shall hire a qualified firm acceptable to the Department to perform the required testing and inspection and provide all documentation as specified in Subsection 3.

Quality control test results shall be submitted in conjunction with the delivery of the posts and blocks. Where the delivery takes place in periodic intervals, the quality control results for the lots delivered shall be provided.

Representatives of the Department shall have access to the lumber before and after treatment for the purpose of quality assurance testing. Any lot or charge which does not meet the specifications when tested as part of the quality assurance program may be rejected by the Department. In such cases duplicate samples will be obtained and analyzed. The results of the duplicate tests shall be considered final for the purposes of acceptance. Failure to meet the specification does not preclude the Contractor from re-treating the posts and blocks so as to meet specification requirements.

The Contractor shall arrange for a technical representative of the supplier/ manufacturer of the EAGRT system to be on-site for the initial installation on the contract to ensure that correct procedures are established. Upon completion of all the installation in the contract the technical representative will inspect all the installations and shall supply the department with a letter certifying that the material used and the installations meet with their and the requirements of NCHRP Report 350, Test Level 3.

7.0 METHOD OF MEASUREMENT

7.1 Guide Posts. Wooden guide posts shall be measured for payment as one unit (each) for both installation or removal.

Flexible guide post delineators shall be measured for payment as one unit (each) supply and installation, or removal.

7.2 Guard Rail Systems. Steel guard rail systems shall be measured for payment in linear metres based on the length of rail plus the length of end wings and any appurtenances. The value used in the calculations for the length of standard rail is 3.81 m, that is the distance between support holes. The length of a standard end wing to be used in the calculations is 0.54 m with 9 bolts. Length of a Michigan shoe is 0.58 m. When more than one rail and/or a channel section is placed between posts or removed, the length used in the calculations for payment is 3.81 m.

7.3 EAGRT System. The Quantity to be measured for payment will be the number of EAGRT systems installed in accordance with this Item.

8.0 BASIS OF PAYMENT

8.1 Guide Posts. Wooden guide posts will be paid for at the appropriate contract unit bid price per post for:

- Installation of Wooden Guide Posts
- Removal of Wooden Guide Posts

Prices shall be full compensation for the transportation, handling and supply of treated wooden guide posts, digging and/or auguring of post holes, setting of posts, installing reflectors, backfilling and compacting, disposal of surplus material, removal of wooden guide posts, cleanup of the site and all equipment, plant, labor, quality control and any other incidentals necessary to complete the work to the satisfaction of the Engineer.

Payment for the supply and installation of flexible guide post delineators shall be at the Contract bid price for each and shall be considered full compensation for all labour, materials and incidentals as herein specified. Flexible guide post shall be installed at spacings and offsets as directed by the Engineer.

8.2 Guard Rail Systems. Steel guard rail systems will be paid for at the appropriate contract unit bid price per linear metre for:

- Erection of Steel Guard Rail System
- Erection of Steel Guard Rail System at Bridge
- Erection of steel Guard Rail system at Bridge (No channel)
- Erection of Steel Guard Rail System at Bridge Columns
- Erection of Steel Guard Rail System at Sign Trusses
- Removal of Steel Guard Rail System
- Adjustment of Steel Guard Rail System

which prices shall be full compensation for the transportation, handling and supply of treated posts and blocks (where required), rails, channels, wings, bolts, washers, all necessary appurtenances (including all incidentals required to attach the guard rail to the structure), digging and/or auguring of post holes, setting of posts, installing reflectors, backfilling and compacting, disposal of surplus material, removal of guard rail system, adjustment of guard rail system, rough grading, burial of guard rail at terminal ends, cleanup of the site and all equipment, plant, labour, quality control and any other incidentals necessary to complete the work to the satisfaction of the Engineer.

8.3 EAGRT Systems. Payment for Work under this Item shall be at the Contract unit bid price per each installation including all material, labour and equipment to do the work as herein described to the satisfaction of the Engineer.

9.0 WARRANTY

At the end of the one-year warranty period, the permissible tolerance for plumb and grade of all posts shall be 13 mm.

SECTION 7 - CAST IN PLACE CONCRETE

1.0 DESCRIPTION

This section details the requirements for materials and methods in the proportioning, mixing, transport, placement, finishing and inspection of cast in place Portland Cement Concrete (PCC).

2.0 REFERENCES

All reference standards shall be current issue or latest revision at the first date of tender advertisement. This specification refers to the following standards, specifications or publications:

- ANSI/ACI 117, Tolerances for Concrete Construction and Materials
- ASTM C260, Air-Entraining Admixtures for Concrete
- ASTM C309, Specification for Liquid Membrane-Forming Compounds for Curing Concrete
- ASTM C494, Chemical Admixtures for Concrete
- ASTM C1064, Temperature of Freshly Mixed Portland Cement Concrete
- ASTM D1751, Preformed Expansion Joint Filler for Concrete Paving and Structural Construction
- CGSB 37.2-M, Emulsified Asphalt Mineral Colloid Type Unfilled for Damp-Proofing, Water-Proofing and for Roof Coatings
- CGSB 37.3-M, Application of Emulsified Asphalts for Damp-Proofing or Water-Proofing
- CSA A3001, Cementitious Materials for Use in Concrete
- CSA A23.1, Concrete Materials and Methods of Concrete Construction
- CSA A23.2, Methods of Test for Concrete
- CSA S269.3, Concrete Formwork
- Drawing S-2009-019
- Drawing S-2009-021
- Drawing S-2009-051
- Drawing S-2009-022

3.0 SUBMISSIONS AND DESIGN REQUIREMENTS

3.1 Formwork and Falsework. One copy of drawings and design calculations for Formwork and related Work bearing a Registered Professional Engineer's seal shall be submitted by the Contractor to the Engineer for review at least four (4) weeks before construction. The submission is intended for information purposes only and shall in no way relieve the Contractor of full responsibility to carry out work related in accordance with CSA S269.3 for Concrete Formwork and CSA S269.1 for Falsework.

3.2 Notification of Ready Mix Supplier. At least two weeks in advance, the Contractor shall advise the Engineer of the qualified Ready Mixed Concrete Supplier which they propose to use. The Engineer will verify the acceptability of the Supplier and the mixture designs. Acceptance of the Supplier and the mixture designs by the Engineer does not relieve or reduce the responsibility of the Contractor or Supplier from the requirements of the specification.

3.3 Advance Qualification of Ready Mixed Concrete Suppliers. The Contractor shall recognize that the Department may qualify in advance, as detailed below, Ready Mixed Concrete Suppliers, however, the Department bears no responsibility for said advance qualification. Liability for the product supplied shall be the sole responsibility of the Contractor.

Ready Mixed Concrete Suppliers may become qualified prior to supplying concrete to Department projects. Qualification may be obtained by submitting current relevant acceptance test data and concrete mixture designs, typically specified for Cast in Place Concrete, to the Department for review prior to the first day of December. Current relevant acceptance test data is defined as data which has been obtained within ninety days prior to the first day of December. The Department will maintain a list of qualified Ready Mixed Concrete Suppliers including their concrete mixture designs. Ready Mix Concrete Suppliers who become qualified in the month of December, shall remain qualified to the thirty first day of December of the following year.

3.3.1 Required Test Information. The Ready Mixed Concrete Supplier shall provide relevant test data for all materials indicating conformance to the requirements of CSA-A23.1 and this specification. The sources and test results of all materials shall be clearly identified. The aggregate tests shall be conducted by a testing laboratory, approved by the Department, under the direction of a Professional Engineer registered to practice in Nova Scotia. Test data required

shall include, but not be limited to:

- Portland cement
- Blended hydraulic cement (if used)
- Supplementary cementing materials
- Admixtures
- Water
- Aggregates

Aggregate testing shall consist of:

- Sieve Analysis[(1)] of Fine and Coarse aggregate
- Amount of Material Finer[(1)] Than 80 µm in Aggregate
- Bulk Relative Density and Absorption of Fine and Coarse Aggregate (SSD basis)
- Fineness Modulus[(1)] of Fine Aggregate
- Clay Lumps and Light Weight Pieces
- Test for Organic Impurities in Fine Aggregate
- Flat and Elongated Particles in Coarse Aggregates
- Petrographic Analysis of Coarse Aggregate (PN - NS Test Method)
- Resistance to Degradation of Coarse Aggregate by Abrasion and Impact in the Los Angeles machine
- Micro-Deval test for Coarse and Fine Aggregate
- Soundness of Coarse & Fine Aggregate by Use of Magnesium Sulphate
- Test for Detection of Alkali-Aggregate Reactivity [(2)] (AAR) on Coarse and Fine Aggregate.
- Unconfined Freeze Thaw test.

[(1)]Prior to the first concrete placement, a washed sieve analysis shall be conducted on each proposed stockpiled aggregate at the ready mix plant, representative of the materials to be used in the work and the results submitted to the Engineer by the Contractor.
[(2)] If an aggregate is known to be reactive or has previously failed the AAR test when tested without a supplementary cementing material, the results of an AAR test incorporating sufficient supplementary cementing material content, or equivalent, shall be submitted demonstrating mitigation of the potential for reaction.

3.3.2 Certification and Membership. The Ready Mixed Concrete Supplier shall provide current plant certification and membership certificates issued by the Atlantic Concrete Association (ACA).

3.4 Ready Mix Concrete Suppliers (Not Qualified in Advance). In the event that the Contractor selects a Ready Mixed Concrete Supplier not qualified in advance by the Department, the Contractor shall, within four (4) weeks prior to starting concrete work, submit to the Engineer all of the required information detailed in Subsection 3.3 of this section. The Engineer will verify the acceptability of the Supplier and the mixture designs. Ready Mix Concrete Suppliers who become qualified after January first, shall remain qualified to the thirty first day of December in the same calendar year.

3.5 Use of Proprietary Products In the event a propriety product is selected as the repair material, the product shall be reviewed and accepted by the Department in advance.

Submissions shall be made to the Chair of the Department's Concrete Technical Committee between the period of September 1 and December 31 of the current calendar year. Submissions received outside of this time period may not be reviewed in a timely manner. Department representatives shall review all submissions once per calendar year. Upon completion of this review, the Chair will respond to the submitter indicating acceptance or rejection of the products proposed. The product(s) reviewed and accepted will be considered valid for a three (3) year period from the date noted on the Department's response.

Products will be reviewed for the following application types: vertical, horizontal, and overhead. The submitter shall indicate the intended application for each product submitted. A maximum of four (4) products can be submitted for each of the above applications. The submission shall be in the form of a letter stamped by a professional engineer licensed to practice in Nova Scotia. The letter shall include:

- Submission date,
- Verification of application types for each product proposed, and of specialized or unique applications,
- Manufacturer's technical data sheet and material safety data sheet (MSDS) for each proposed product as an appendix; verification of temperature range for application and curing period, list of at least three (3) different

projects where the proposed product, with current formulation, has been successfully used in similar applications complete with contact names, telephone numbers

Technical data sheets shall include technical attributes for the intended application such as plastic properties to suit placing conditions, shrinkage characteristics, compressive strength, and freeze thaw durability

On each project, prior to the use of a propriety product, the contractor shall submit to the Project Engineer a current copy of the Department's acceptance letter for the proposed products and application. The submittal to the Project Engineer shall be accompanied by a current technical data sheet and MSDS for each product intended for use on the project. Application to the Engineer shall be made a minimum of five (5) days prior to the use of the product. The Engineer will review and verify the submission prior to the product use.

In the event a contractor proposes a product that has not been accepted, the contractor shall submit the proposed product in the manner described above to the Project Engineer at least four (4) weeks prior to the scheduled use on a project. Proprietary products not reviewed and accepted shall not be used on Department projects.

Acceptance for the use of a propriety product shall not relieve the Contractor of any performance or warranty responsibilities for the performance of the product. TIR is not obligated to accept any or all proposed products. In the opinion of TIR, demonstrated unsatisfactory performance of a product could result in removal of the product from the acceptance process.

4.0 MATERIALS

4.1 General. All materials used in the production of concrete shall conform to the referenced standards.

4.2 Formwork. Formwork shall be constructed from lumber devoid of warp and defects in order to achieve a face alignment free from distortion. This shall apply to all panel forms including prefabricated boards, plywood and steel panels. Prior to assembly and placement of reinforcing steel all forms and panels shall be treated with a non-staining, non-reactive mineral oil or liquid, as approved by the Engineer. Patching shall be kept to a minimum.

Formwork shall be supported by shores to sustain all horizontal and vertical loads during placing of the PCC. Column forms shall be seamless heavy gauge galvanized steel and/or fibre column molds.

4.3 Concrete Mixture Designs

4.3.1 Proportioning. Concrete mixtures shall be proportioned in accordance with CSA A23.1, Alternative #2, and the Contractor shall accept responsibility for concrete strength. The physical properties for various structural elements are identified in Table 5.7.1 of this specification.

4.3.2 Mix Proportions. The Ready Mixed Concrete Supplier shall select mix proportions that shall produce concrete of specified quality, yield and strength complying with Alternative #2 CSA-A23.1, and Table 5.7.1 of this specification. Typical mixture designs include, but are not limited to:

- 20 mm 25 MPa
- 20 mm 30 MPa
- 20 mm 32 MPa
- 20 mm 35 MPa
- 20 mm 45 MPa

A report outlining the proposed mixture designs shall be signed by a Professional Engineer registered to practice in Nova Scotia. The Professional Engineer shall attest to the validity of the material test data stated in Subsection 3.3. Mix designs incorporating alkali reactive aggregate shall be adjusted to limit excessive expansions.

4.3.3 Changes to Mixture Designs or Material Properties. If material characteristics change after the Ready Mixed Concrete Supplier becomes qualified, the Contractor shall provide physical properties and certified test results as indicated in Subsection 3.3 of this specification. In the event mixture designs are modified without changing material characteristics, the revised mixture designs shall be submitted to the Engineer.

4.3.4 Concrete Mix Specifications. The mix design specifications can be found in Table 5.7.1

4.4 Aggregate Specification. The maximum Petrographic Number of coarse aggregate shall not exceed 140. The

maximum absorption of coarse aggregate shall not exceed 2%.

4.5 Curing Compounds. Membrane curing compound shall be white pigmented Type 2, meeting the requirements of ASTM C309.

4.6 Damp-Proofing. All damp-proofing material shall conform to CAN/CGSB-37.2-M and shall be applied in accordance with CGSB-37.3.

Table 5.7.1 - **Concrete Mixture Design Specifications**

Element	**Leveling Slab**		**Tremie**	**Roadway Curbs & Sidewalks, Jersey Barrier, Driveway Entrances, Abutment, Wingwall, Slope Protection, Culvert,**	**Bridge Rehabilitation**		**Non HPC Construction[5]**
Maximum Nominal Aggregate, mm	40	20[1]	20	20	20	10	*20*
Minimum 28 Day Compressive Strength, MPa	30		30	32	35		*45*
Maximum Water/cementing Material Ratio	0.5		0.45	0.45	0.4		*0.4*
Minimum Cementitious Content kg/m^3[2]	300		390	350	415		*415*
Air Content %	6 ± 1		6 ± 1	6 ± 1	6 ± 1	7.5 ± 1.5	*6 ± 1*
Slump, mm	80 ± 20		170 ± 30	80 ± 20[4]	80 ± 20		*80 ± 20*
Chloride Ion Penetrability, coulombs					1,500 within 91 days		
Required Admixtures[3]	Water Reducer, Air Entrainment						

[1] Either aggregate size may be utilized unless otherwise specified.
[2] Portland Cement shall be Type GU unless otherwise specified.
[3] Other admixtures such as Retarders, Accelerators or Superplasticizers may be used if approved by the Engineer.
[4] Lower slump may be required when a slip form machine is used to place concrete.
[5] For 45 MPa High Performance Concrete (HPC) structures, refer to Division 5, Section 18

5.0 CONSTRUCTION METHODS

5.1 Formwork Design. Formwork design and the proposed method of construction shall meet all necessary requirements in terms of strength and properties of material, rigidity and erection tolerances as presented in Subsection 5.1 of this specification.

Formwork shall be built with sufficient strength and rigidity to carry the mass or fluid pressure of the PCC as well as all construction loads including wind, equipment and runways which might be placed upon them. The fluid pressure on forms shall be correlated to the capacity and type of placing equipment, the rate of placing, slump and temperature of the PCC.

Formwork shall be supported by stiff members in two directions at right angles which are sufficiently rigid to hold the unit as a whole in line and in proper position and shape. Formwork shall be accurately located, rigidly tied or braced to resist vertical or horizontal movements and adequately supported. However, they shall be so arranged to allow for easy stripping to prevent damage of the PCC during removal. The use of twisted wires and wood spreaders are prohibited unless approved by the Engineer.

5.1.1 Formwork/Falsework Construction. The Contractor shall construct the falsework and formwork in accordance with the approved drawings. Variations from the drawings shall not be permitted unless such variations are approved by the Designer, and the Engineer is provided with revised drawings prior to construction. Both the falsework and formwork shall be designed and constructed to provide the necessary rigidity and to support the loads without settlement or excessive deflection.

All falsework and formwork used to support fresh concrete during construction of the following components shall be designed by a Registered Professional Engineer in accordance with CSA S269.3:

- Bridge decks and pier caps
- Columns over 3 m in height
- Retaining walls over 3 m in height
- Roofs of structures under which persons are required to work
- As required on the contract drawings

5.1.2 Construction Joints. The locations and details of vertical construction joints not indicated on the drawings shall be submitted by the Contractor to the Engineer for their approval. PCC in piers and abutments shall be placed without horizontal construction joints unless previously approved by the Engineer.

5.1.3 Removal/Re-Use of Formwork and Falsework. Formwork and falsework shall not be removed without the approval of the Engineer.

All formwork and falsework shall be completely removed from the structure. Formwork shall be removed progressively and with care so that corners of PCC members are not damaged or marred.

The formwork and falsework shall not be removed until 60% of the design strength has been achieved. Curing, protection and loadings shall be in accordance to CSA requirements.

Formwork material intended for re-use shall be clean and in satisfactory condition. Formwork shall not be re-used without the Engineer's approval.

5.1.4 Formwork Tolerances. The following tolerances in Table 5.7.2 are permitted for lines, grades or dimensions shown on the contract drawings:

5.2 Concrete Production. Concrete shall be produced at a stationary or portable plant. Concrete shall not be supplied to any Department project unless the Ready Mixed Concrete Supplier is qualified by the Department and so designated.

5.2.1 Mixing and Transporting. The concrete materials shall be mixed and transported in a manner which will not segregate or damage the mix in any fashion. Concrete shall be mixed utilizing stationary or truck mixers. The mixer shall carry the manufacturer's rating plate in a prominent position, indicating:

- The gross volume of the mixer
- The rated maximum mixing capacity
- The minimum and maximum speeds for mixing and agitating of the mixer

All mixers shall be capable of combining the concrete ingredients into a thoroughly mixed and uniform mass. In no case shall the mixer loading exceed its rated maximum mixing capacity.

Mixers shall be emptied before charging. The mixer shall be rotated at the Manufacturer's recommended mixing speed during charging and mixing.

Where ready mix trucks are used to transport the concrete, the Department reserves the right to subject any truck suspected of poor mixing to a uniformity test as outlined in CSA A23.1. If said truck fails the uniformity test, then the concrete and the truck shall be rejected unless otherwise directed by the Engineer. The truck shall not be permitted on a Department site until appropriate repairs have been completed and certified.

Table 5.7.2 - Formwork Tolerance

Variation from Contract Drawings	Tolerance
(I) For plumb or specified batter at columns, piers and walls	12 mm in 3 m for Exposed area 25 mm in 3 m for Backfilled area
(II) For level or specified grade in slabs, beams, horizontal groves, railing offset, etc.	12 mm in 3 m for Exposed area 25 mm in 3 m for Backfilled area
(III) X-Sectional dimensions for Piers, Columns, Beams, slabs, walls, etc.	No more than 12 mm No less than 6 mm
(IV) Bridge Deck Thickness	No more than 6 mm No less than 3 mm
(V) Footing Length & Width	No more than 50 mm No less than 12 mm
(VI) Footing thickness	minus 5% of the specified thickness

5.3 Form Preparation/Concrete Placement. The Contractor shall provide the Engineer with at least 24 hours' notice of intent to place concrete in order to permit the Engineer to schedule inspection services. All PCC placing methods shall be subject to the approval of the Engineer.

In preparation for the placing of concrete, all sawdust, chips, construction debris and other deleterious materials shall be removed from the interior of forms. The PCC shall be delivered to the point of final deposit in a manner satisfactory to the Engineer using means and equipment which will prevent segregation or loss of materials. The size of section to be placed in one continuous operation shall be as detailed on the drawings or as directed by the Engineer. PCC for deck slabs shall not be placed between November 15 and April 15, without the written approval of the Engineer.

Unless otherwise authorized by the Engineer, forms shall be kept dry during the placing of the PCC until the PCC has reached initial set. The Contractor shall be held responsible for the placing method used. PCC shall be deposited in the forms in maximum lifts of 500 mm and in layers that are approximately horizontal and as close as practicable to its final position. PCC shall not be moved horizontally with vibrators or by other methods which could cause segregation.

The conveying equipment shall be kept free from deleterious materials and cleaned at frequent intervals. Conveying equipment, if supported by formwork, shall not impart harmful vibration to PCC nor cause misalignment of forms.

Under adverse weather conditions the Contractor shall be prepared to provide suitable protection in order to prevent damage to PCC.

Unless otherwise authorized by the Engineer, wood spreaders shall not be used in any PCC where either face will be exposed or in any wall where water tightness is required.

If the PCC details are such that a feather edge or thin section might be created by the sequence of casting, a bulkhead should be introduced to maintain an edge thickness of at least 100 mm.

5.3.1 Placing Concrete Under Water (Tremie Method). Notwithstanding the provisions elsewhere stated in this specification, the following provisions shall apply to PCC deposited under water. PCC shall be deposited under water only when specifically authorized by the Engineer. The methods, equipment, materials, forms and cofferdams shall be approved by the Engineer before work is started, but such approval shall not in any way relieve the Contractor of liability in connection with the work.

Tremie Concrete shall comply with the provisions of CSA A23.1. The placing of PCC under water shall be carried on continuously until that portion of the structure is completed.

At the start of the concreting operation, the tremie pipe shall be sealed at the bottom with a plug or foot valve to prevent ingress of water.

All laitance, slime or other matter deposited or formed on the surface of any PCC under water shall be removed before any additional PCC is placed on same.

5.3.2 Placing and Finishing Bridge Deck Concrete. The finished surface of the deck concrete shall conform to grades and elevations shown on the contract drawings. Prior to placing deck concrete, the Contractor shall submit to the Engineer detailed information on the method and equipment proposed for handling, placing and finishing of the

concrete. The Contractor shall also demonstrate to the satisfaction of the Engineer that all necessary adjustments have been made to provide the required camber, crown, slab thickness and concrete cover over reinforcement, prior to placement.

The surface shall be finished with a mechanical screed machine, which shall be supported by guide rails and span the full width of the deck. Guide rails shall be located outside the finished surface of the deck. Supports for the guide rails shall be capable of fine adjustment and not be fixed to, or located upon, the reinforcing steel. The quantity of supports shall be such that the screed rails do not deflect more than 1 mm during the screeding operation.

Immediately prior to placement of deck concrete, the formwork shall be cleaned and thoroughly moistened. The Contractor shall also moisten the reinforcing steel with water at the request of the Engineer. Deck concrete shall be placed continuously between transverse joints until completion of the section. The placing sequence for continuous structures shall conform with the contract drawings.

The concrete surface shall be floated with a wooden or magnesium float.

The concrete shall be textured by means of a burlap drag, broom or approved alternative.

There shall be no application of water or cement to the concrete surface for finishing purposes.

Deck concrete shall be water cured as indicated in Subsection 5.5.4 of this specification. During freezing temperatures, water curing shall be terminated 12 hours prior to the end of the protection period.

5.3.3 Roadway Concrete Curb/Gutter, Sidewalk, Jersey Barrier, Culvert Slabs and Haunches. Concrete curb/gutter shall be constructed in accordance with this specification and with drawings S-2009-019 and S-2009-021 or as noted in the Special Provision of the contract. Jersey Barrier shall be constructed in accordance with this specification and with drawing S-2009-022 or as noted in the Special Provisions of the contract. Culvert slabs and haunches shall be constructed in accordance with this specification and with drawing S-2009-051 or as noted in the Special Provisions of the contract. Roadway Curb/Gutter, Sidewalk and Jersey Barrier shall be constructed with wood or metal forms or by a slip form paver.

At driveways, concrete curb Type A shall be depressed 100 mm at the road edge and 80 mm at the rear edge. Types B, C and D shall be depressed 120 mm at the road edge and 100 mm at the rear edge. Unless otherwise specified, driveway widths as measured along the depression shall be 3.7 m for a single driveway and 5.0 m for a double driveway.

Catch basin metal frames and grates shall be adjusted to grade prior to placement of adjacent curb and gutter.

Control joints shall be formed by saw cutting or by use of a jointing tool. Control joints shall be constructed at right angles to the edge of the Curb/Gutter, Sidewalk and Jersey Barrier. Saw cuts shall be made between one quarter to one third of the depth of the section and extend along the entire exposed face. Concrete shall be saw cut as soon as possible after finishing without causing excessive raveling and before shrinkage cracks occur. Saw cutting shall be completed on a continuous basis regardless of time of day. Sidewalks shall be 1.5 m wide and 100 mm thick except at driveway entrances where the thickness shall be 150 mm. The maximum spacing of control joints for curb/gutter and Jersey Barrier shall be 5.0 m. The maximum spacing of control joints for sidewalk shall be 1.5 m. Control joints shall also be placed at a distance of 1.5 m from the centre of catch basins.

Expansion joints shall be constructed every 15 meters along the length of a sidewalk. The expansion joint shall be constructed at right angles to the edge of the sidewalk and shall extend for the full width and depth of the sidewalk section. The expansion joint shall be constructed using a pre-molded non-extruding bituminous impregnated fibre-board, 12 mm thick, conforming to ASTM D 1751. It shall be installed 6 mm below the surface of the concrete and an edger (6mm radius) shall be used to finish the concrete on either side of the joint. The top surface of the fibre-board shall be fully exposed along its entire length.

Isolation jointing material shall be installed to provide a separation between new concrete and existing structures (e.g. curbs, buildings, lamp posts, fire hydrants, water valves, etc.). Isolation jointing material shall be a polyethylene foam, cross linked polyethylene foam, or polyurethane and shall conform to the requirements of ASTM D 5249. The jointing material shall extend the full width and depth of the section and shall be flush with the surface.

Curb/Gutter, Sidewalk and Jersey Barrier shall be cured as indicated in Subsection 5.5 of this specification.

The Contractor shall backfill the area behind the curb to a distance not exceeding 0.6 m from the back of the curb. The material used shall be of a common or borrow type free from large rock or organic material. Granular materials

shall not be used.

5.4 Consolidation. All methods of consolidation shall be subject to the approval of the Engineer. PCC shall be consolidated thoroughly and uniformly by means of hand tamping, vibrators or finishing machines to obtain a dense, homogeneous structure, free from cold joints, voids and honeycomb.

A sufficient number of vibrators shall be employed to adequately handle the anticipated rate of placement. The size and frequency of vibrators shall be as specified in CSA A23.1. A stand-by vibrator shall be available on the site at all times.

Internal vibrators shall be used wherever practicable. External type vibrators may be used where surfaces cannot be properly consolidated with the internal type alone.

Insertion of internal vibrators shall be made systematically at intervals such that the zones of influence of the vibrator overlap.

Extreme care shall be taken to ensure that the internal type vibrators do not displace the reinforcing steel or the forms. Vibrators shall have rubber or non-metallic vibrating heads if epoxy coated reinforcing steel is used.

5.5 Protection and Curing of Concrete. PCC shall be protected from freezing, premature drying, high temperature and moisture loss for a period of time necessary to develop the desired properties of the concrete. All freshly placed and consolidated PCC shall be suitably protected from the elements and from defacement due to building operations, traffic and vandals. The effects of direct sunshine, drying winds, cold, excessive heat and running water are particularly harmful. The PCC shall be protected by the use of adequate tarpaulins or other suitable material to completely cover, or enclose, all freshly finished surfaces.

Curing shall be applied to PCC as soon as possible without damaging or marring the surface. The curing time shall be as indicated in CSA A23.1 or this specification. Curing shall be achieved by one or more of the following:

5.5.1 Burlap. Two layers of pre-soaked burlap shall be carefully laid on the surface as soon as the PCC has set sufficiently to support the mass of the burlap without marking the surface. Strips shall be overlapped 150 mm, secured to the surface and kept wet throughout the curing period.

5.5.2 Moisture Vapour Barrier. The Contractor shall provide an effective vapour barrier and prevent any flow of air between it and the PCC surface. Where polyethylene sheet is used, it shall be white opaque pigmented with a minimum thickness of 100 µm. The vapour barrier shall be secured to the surface and overlapped 150 mm.

5.5.3 White Pigment Liquid Membrane. Curing compounds shall not be used on a surface where a bond is required for additional PCC. A curing compound may be approved by the Engineer under certain circumstances where the application of moisture is impracticable and where such compounds will not jeopardize the appearance of the PCC. Curing compounds shall be applied at the Manufacturer's recommended application rate. Curing compounds are not permitted on construction joints, surfaces requiring weatherproofing sealants or deck sections.

5.5.4 Water. All PCC bridge decks shall be cured with water unless otherwise directed by the Engineer. PCC exposed surfaces shall be kept continuously moist for a minimum of seven consecutive days after placing. The water for curing shall be clean and free from any material which could cause staining or discoloration of the PCC.

5.6 Hot Weather Concreting. When the air temperature is at or above 27°C, or is likely to rise above 27°C within 24 hours, special measures, as detailed in CSA A23.1, shall be taken by the Contractor to protect the concrete from the effects of hot and/or drying weather conditions. The temperature of the formwork, reinforcing steel or the material on which the concrete is to be placed, shall not exceed 27°C.

Concrete temperatures shall not exceed those specified in CSA A23.1, Table 14.

5.7 Cold Weather Concreting. When the mean air temperature is at or below 5°C or when the temperature is likely to fall below 5°C within 24 hours, the Contractor shall place, cure and protect PCC in accordance with CSA 23.1 and this specification.

PCC shall not be placed on or against any surface which is at a temperature less than 5°C. Snow and ice shall be removed before PCC is deposited on any surface. Calcium chloride or other de-icing chemicals shall not be used as a deicing agent in the forms.

If the Department specifies heating of the mix water and/or aggregates, the charging cycle shall be altered to prevent flash setting of the PCC. Aggregates and water shall not be heated above 80°C. Water and/or aggregates heated to a temperature in excess of 40°C, shall be batched in the mixer first to reduce the temperature of the combination below 40°C, prior to the addition of the cementing materials. All frozen lumps of aggregate shall be excluded from the mix.

5.8 Protection Classes. Protection and curing depends upon the outside temperature, the wind velocity, and the size of the PCC section. Under normal circumstances the following methods of protection may be required to maintain the protection necessary for the conditions described.

Heating of the mixing water and/or aggregates shall be required for all classes of protection.

5.8.1 Special Protection. When the outside temperature during placing or during the protection period may fall below 5°C, adequate covering of all surfaces with tarpaulins or polyethylene sheets shall be provided.

5.8.2 Special Protection with Insulation. When the outside temperature during placing or during the protection period may fall below 0°C, all surfaces shall be covered with an approved insulating material, over which tarpaulins or polyethylene sheets are placed.

5.8.3 Complete Housing with Heat. When the outside temperature during placing or during the protection period may fall below -5ºC, a complete housing of the PCC, together with supplementary heat, shall be provided. The Contractor shall ensure that heat is supplied uniformly around the PCC. For mass concrete, defined as minimum section dimension in excess of 2 m, the temperature gradient shall not exceed 20°C/m from the interior of the element to the exterior face. In thin sections, less than 2 m, the temperature differential from the interior to the exterior shall not exceed 20°C. Steam or hot air blowers may be used, but a means of maintaining relative humidity of not less than 95% shall be provided. When dry heat is used, hot air shall not be permitted to flow directly onto the PCC surface. Exhaust fumes shall be vented.

The protection and curing shall continue to maintain the temperature of the PCC at not less than 10°C for five days after placing. The PCC shall be kept above 0°C for a total period of fourteen days.

At the end of the curing and protection period, protection and heating shall be withdrawn in such a manner as not to induce thermal shock stresses in the PCC. The temperature of the concrete shall be gradually reduced to avoid cracking due to sudden temperature changes near the end of the curing period. The protection shall not be completely removed until the concrete has cooled to the temperature differential stated in Table 18 of CSA A23.1.

5.9 Concrete Surface Finish

5.9.1 Formed Surface. All formed surfaces shall receive the basic treatment as indicated below. In addition to the basic treatment, all exposed surfaces shall receive a "Smooth Form" finish as indicated below.

5.9.1.1 Basic Treatment. Upon removal of the forms, all cavities, honeycomb, surface voids, bugholes (greater than 6mm diameter) and other deficiencies identified by the Engineer, shall be patched with a sand cement mortar of the same composition as that used in the PCC. Mortar shall be composed of cement, fine aggregate and water, proportioned and mixed as specified. When the proportioning of cement and fine aggregate is not specified, the mortar shall consist of one (1) part by volume of cement and two (2) parts of fine aggregate. The quantity of water used in mixing the mortar shall be sufficient to make it capable of being freely spread with the trowel. Mortar shall be mixed in quantities which can be utilized within 60 minutes. Mortar shall not be re-tempered or re-mixed with water after initial set.

All bolts, ties, nails, or other metal not specifically required for construction purposes, shall be removed or cut back to a depth of 25 mm from the surface of the PCC unless otherwise directed by the Engineer. The cavity shall be keep saturated for 60 minutes prior to the application of a latex bonding agent or neat cement paste. The mortar shall be pressed or packed into the depressions so as to completely fill the cavity and then finished to match the adjacent surface. Fins, unsightly ridges, or other imperfections shall be chipped or rubbed off flush with the surface. Mortar patches in excess of 25 mm shall be applied in layers not exceeding 25 mm with a 30 minute interval between the placing of layers. The surface of the patch shall be textured equivalent to the adjacent concrete.

Honeycomb areas or cavities over 25 mm in diameter shall not be repaired until inspected by the Engineer. Where honeycombing has occurred in non-structural elements, the affected area shall be removed and filled with mortar as previously described. Where honeycombing has occurred in structural elements, the corrective method of treatment shall be carried out as directed by the Engineer.

All concrete and mortar shall be cured and protected in accordance with CSA A23.1 and Subsection 5.5 of this specification.

5.9.1.2 Smooth Form Finish. A Smooth Form Finish shall be a uniform, high quality concrete which has been homogeneously placed and thoroughly compacted. A Smooth Form Finish shall be uniform in colour, pattern and texture. Curbs, sidewalks, parapet walls, abutments, piers and any other surfaces the Engineer may designate, shall have a Smooth Form Finish**.**

If the concrete, after form stripping and the basic treatment, does not exhibit such finish, the Contractor shall perform any or all of the following operations, as directed by the Engineer, in order to obtain a Smooth Form Finish:

- Cut out all corrodible metal within 25 mm of the surface and repair the cavities as indicated in Subsection 5.9.1.1, basic treatment.
- Remove fins and other projections to leave a smooth, plane surface.
- Remove stains, rust marks or other blemishes which detract from the specified uniformity of appearance.

5.9.2 Open Surfaces. The finished surface of concrete placed for such items as bridge decks, approach slabs, sidewalks and curbs shall conform to the lines, grades and elevations shown on the contract drawings and as stated herein.

5.9.2.1 Sidewalks. Sidewalk surfaces shall be laid out in blocks by use of a jointing tool, saw cutting or as indicated on the plans. Concrete edges and expansion joints shall be formed in the concrete at the designated locations. Joints shall be rounded using a 6 mm radius edging tool. Sidewalk surfaces shall be struck-off with a strike board and floated. The finished surface shall not vary more than 3 mm under a 3 m straight edge and shall be lightly broomed transversely to produce a textured, non-slip surface.

5.9.2.2 Decks. The deck shall be finished using a mechanical screed machine followed by bullfloating and final texturing. Final finishing, texturing and curing shall be completed within 1.5 metres behind the screed machine. A work bridge (mobile catwalk) shall be used following the screed machine for bullfloating and finishing operations.

The finishing machine shall be self-propelled and travel on rails. It shall be fitted with a rotating cylinder screed, an adjustable powered screw auger and a vibrator mounted in front of the screed. It shall be capable of forward and reverse movement under positive control. There shall be provision for raising all screeds to clear the screeded surface without adjusting the legs. It shall also be provided with a locking device at each leg to prevent vertical adjustment. The finishing machine shall be capable of obtaining an acceptable surface texture without excessive additional hand finishing.

A work bridge riding on the screed rails behind the finishing machine with a working platform not higher than 0.4 m above the finished surface, shall be provided to facilitate hand finishing work, concrete inspection, and placing of curing materials. On placements longer than 40 m or wider than 10 m, a second work bridge shall be provided. When two work bridges are required, the trailing work bridge shall ride on the screed rails and shall be used for the purpose of placing the curing materials and shall have sufficient clearance to allow for the proper placing of the curing materials. Screed rail chairs shall be adjustable in height and made of metal.

The finish deck surface shall be tight, smooth, free from ridges, depressions, undulations or blemishes. The surface shall receive a texture finish as indicated in Subsection 5.3.2 of this specification. Except across the crown, the deck surface shall be such that when tested with a 3 m long straight edge placed in any direction, there shall not be a gap greater than 8 mm between the bottom of the straight edge and the surface of the concrete.

Areas which do not meet the required surface profile shall be clearly marked and removed by the Contractor at the Contractor’s expense. The Contractor shall, as directed by the Engineer:

- Grind down any areas higher than 3 mm but less than 10 mm
- Remove and replace deviations exceeding 10 mm. The quality of the repair shall be equal to or greater than the adjacent concrete in the undisturbed slab.

5.10 Damp-Proofing. The back face of abutments, wingwalls and retaining walls, from the top of footing to underside of curbs, as well as the top and sides of "culvert type structures", where PCC will be in contact with the earth fill, shall be damp-proofed.

Damp-proofing shall consist of one coat of emulsified asphalt diluted with clean water to a maximum of 50% by volume applied uniformly by brush or spray at the rate of 0.4 to 0.5 L/m^2 of surface area, followed, after the prime coat has cured, by one full strength coat of emulsified asphalt applied at a minimum rate of 0.5 L/m^2 of surface area.

6.0 QUALITY CONTROL / QUALITY ASSURANCE

6.1 General. Concrete will be sampled by the Department or their representative on a random basis. Test specimens will be cast, cured, transported and tested in accordance with CSA A23.1 and A23.2, except as modified herein. Concrete shall be tested by the at the point of discharge as delivered to the work site. Testing shall include but not be limited to:

- Air content - CSA A23.2-4C
- Slump - CSA A23.2-5C
- Temperature - CSA A23.2-17C
- Compressive strength - CSA A23.2-9C

Testing by Department personnel, or representative, shall not relieve the Contractor of the overall responsibility for the strength and acceptability of the concrete supplied.

A set of three (3) regular compressive strength test specimens shall be cast for every 50 m^3 of concrete placed, or fraction thereof, or as directed by the Engineer. In addition, for every regular set of three (3) test specimens, two (2) additional test specimens will be cast as described. If the placement consists of one load, the two (2) additional test specimens shall be cast in addition to the three (3) regular test specimens. In all other cases, additional test specimens shall be cast from another load and not cast with the regular set. Additional test specimens will be tested only if requested by the Engineer for appeal purposes.

All test specimens shall be secured in an approved storage medium, provided by the Consultant, prior to leaving the site.

6.2 Field Adjustments. In the event that the measured air content is outside the specified limit, the Contractor shall be allowed adjustments to the concrete, conforming to the procedures outlined in CSA A23.2. If when retested, the concrete fails to meet Department Specifications, it shall be rejected unless otherwise directed by the Engineer. A minimum of two tests shall be performed on the failing property prior to concrete rejection. The Engineer shall be notified prior to any mix adjustments, however, this shall not relieve the Contractor of the responsibility to provide the specified concrete properties.

No water shall be added after the initial introduction of the mixing water for the mix, except at the start of discharge and when:

- the measured slump is less than specified, and
- no more than 60 minutes[(1)] have elapsed after water and cement have been combined, and
- the concrete is in a stationary or truck mixer
-

[(1)] Subject to discretion of the Engineer, this time limit may be extended.

6.3 Strength Tests. For the purpose of acceptance on the basis of compressive strength, a set of test specimens shall be cast, cured and tested in accordance with the relevant test methods indicated in Section 6.1 of this specification. The specified 28 day compressive strength is the acceptance criteria for concrete. A set of specimens shall consist of three specimens, one specimen tested at 7 days and the remaining two tested at 28 days. The compressive strength result of a sub-lot, as defined in Section 6.5, will be the average of the two 28 day test specimens made from all regular sets cast for the sub-lot, rounded to one decimal place.

6.4 Strength Criteria (With Pay Adjustment). The Department reserves the right to reject any concrete which does not meet all the requirements for the class of concrete specified. The Department also reserves the right to reject any portion of a placement if there exists evidence that this portion has a strength that is below the minimum acceptable required under this section. The Department may, at the discretion of the Engineer, accept concrete which does not meet the specified strength requirements provided that the structural integrity of the section is not jeopardized.

Concrete shall be tested in accordance with CSA A23.1. If three or more sets of cylinders are cast during one placement, the strength of each class of concrete shall be considered satisfactory if the average of all regular sets, 28 day strength tests, equals or exceeds the specified strength. If less than three strength tests are performed, acceptance shall be based on the average of the test results conducted on the section.

If the concrete fails to meet the specified strength by more than 5 MPa, the Department may order replacement or reinforcing, at the Contractor's expense, of the sections in the structure. Alternatively, at the Department's discretion, concrete of a specific class which is otherwise acceptable, but fails to meet the specified strength by less than 5 MPa, may be accepted at a reduced price.

Where required, determination of structural adequacy is independent of, and in addition to, the payment reduction described below. Where design calculation is required, the Contractor shall reimburse the Department for all costs incurred up to a maximum of $2000.00.

Coring of the concrete to verify strength will be permitted only for concrete which is to be replaced or reinforced. Coring will not be permitted for which a reduced payment is to be made for under strength.

The Contractor must obtain Department approval to core a structure. The Contractor shall initiate a request to the Engineer within five business days of receipt of the appeal compressive strength tests which show continued failure of the concrete strength. When coring is permitted, cores shall be taken at locations directed by the Department. Coring shall be completed within five business days of the Department's approval for the coring. The cost of coring shall be borne by the Contractor.

The compressive strength of the concrete in the area of the structure represented by the core tests shall be determined in accordance with CSA except as modified below.

Concrete with a specified strength of 45 MPa or greater will be considered "high-strength concrete". For high strength concrete the average of each set of three cores shall be equal to at least 90% of the specified strength and no single core shall be less than 80% of the specified strength.

In the event the Contractor cores the section in question, within the timelines indicated above, and the strength is no more than 5 MPA less than the specified strength, the Department may accept the concrete at a reduced price. If the strength is more than 5 MPa less than the specified strength, the Department may order replacement or reinforcing, at the Contractor's expense.

6.5 Lots and Sub-lots. A lot shall consist of all concrete of one nominal minimum 28-day strength. If the quantity of concrete of one specified strength is greater than 5000 m^3, the Department will consider proposals to divide the concrete into two lots, based on placement in separate structures or in different construction seasons.

Each lot will be divided into sub-lots from 2 m^3 to a maximum of 500 m^3. Concrete of the same strength placed in one placement or concrete of the same strength placed on the same day shall be considered a sub-lot. A minimum of one set of acceptance cylinders will be made from each section placed (sub-lot).

6.6 Bonus/Penalty. The Department will calculate the mean strength of all the acceptance tests in each sub-lot with a volume of 2 cubic metres or more. The concrete in each sub-lot will be accepted at the contract price or prices, provided the mean strength is equal to or greater than the specified nominal minimum 28 day strength. When the average strength is more than 5 MPa below the nominal specified 28 day strength, the Department may require the Contractor to replace the concrete without a penalty adjustment or may accept the concrete with the maximum penalty adjustment applied. When the average strength is not more than 5 MPa below the nominal specified 28 day strength, the Department may accept the sub-lot with a penalty adjustment applied. When the average strength is not more than 5 MPa above the specified nominal 28 day strength, the Department will apply a bonus adjustment to the sub-lot. The bonus or penalty adjustment will be as described in Basis of Payment.

6.6.1 Appeal Testing. The Contractor shall not be permitted to appeal any test result when the sub-lot meets or exceeds the required strength. The Contractor shall be responsible to obtain the 28 day compressive strength results from the Engineer and the Contractor may appeal the test results for any rejected or penalized sub-lot. In the event of an appeal, the Contractor shall serve notice of appeal to the Engineer, in writing, within 5 business days after completion of the 28 day testing.

If the Contractor appeals the regular test results, the additional test specimens cast will be tested to verify the compressive strength of the sub-lot. The pay adjustment will be based on the strength obtained during the appeal testing. If the strength is lower or higher than the initial 28 day results, the appeal test results shall govern and be used in the pay adjustment calculation.

The Contractor may have a representative present during appeal testing. During the period of the testing, the Contractor's representative shall comment on anything concerning the testing which they do not consider to be valid

and the Engineer shall respond to all comments in order to resolve them. Prior to leaving the testing laboratory any unresolved comments regarding the testing procedures are to be given to the Engineer in writing.

The strength obtained from the appeal testing shall be binding on both the Contractor and the Department.

6.6.2 Appeal Testing Costs. If the appealed test results indicate that a penalty no longer applies, the testing costs incurred shall be borne by the Department. The Contractor shall be responsible for any other costs that the Contractor may incur.

If the appealed test results confirm a negative price adjustment or rejection, the sampling and testing costs, and any other costs that they may incur as a result of the appeal, shall be borne by the Contractor.

7.0 METHOD OF MEASUREMENT

7.1 General. Measurement shall be made at the contract unit price per cubic metre for Cast in Place Concrete. The quantity of concrete for payment shall be the volume in cubic metres computed from the dimensions shown on the drawings or as revised by the authority of the Engineer. No deductions shall be made for the volume of concrete displaced by steel reinforcement, joint material, structural shapes, chamfers, tops of piles, or cylindrical voids of 110 mm diameter or less.

7.1.1 Mud and Leveling Slabs. The quantity of concrete used for Mud or Leveling Slabs shall be determined by volume in cubic metres based on the delivery slip and placed in the work.

7.1.2 Curb/Gutter. The quantity of Curb/Gutter, including curb backing, shall be measured by the linear metre for the length accepted by the Engineer. No deduction shall be made for the reduced height at driveways and other entrances.

7.1.3 Sidewalks and Driveways. The quantity of Sidewalk, Driveway and other entrances shall be measured by the square metre accepted by the Engineer and placed in the work.

8.0 BASIS OF PAYMENT

8.1 General. Except as noted herein payment will be made at the contract unit price bid per cubic metre for Cast in Place Concrete or price adjusted as described below. The payment for Cast in Place Concrete shall be considered full compensation for the cost of furnishing all materials, aggregates, cement, supplementary cementing materials, water, admixtures, and other materials, non-metallic expansion joint materials, tools, equipment, falsework, forms, bracing, labour, curing, surface finish, damp-proofing and all other items of expense required to complete the concrete work as shown on the plans, and as outlined in the specifications.

Payment for roadway Curb/Gutter and Jersey Barrier will be made at the contract unit price bid per linear metre. Payment for curb backing shall be included in the unit price for Curb/Gutter. Payment for Roadway Sidewalk and Driveway entrances will be made at the contract unit price per square metre. Price adjustment for concrete measured by the linear or square metre shall be calculated as per Division 5 Section 13 of the Standard Specifications.

8.1.1 Penalty/Bonus Adjustment. The penalty or bonus adjustment will apply to the calculated quantity of cubic metres of concrete incorporated into the work and accepted by the Engineer. The total adjustment added to or subtracted from payments due to the Contractor shall be the algebraic sum of all penalties and bonuses calculated for all the sub-lots in excess of 2 m^3. A Penalty/Bonus adjustment shall not apply if the sub-lot is less than 2 m^3.

8.1.2 Penalty Adjustment. Concrete which fails to meet the required 28 day compressive strength, by 5 MPa or less and is proven to be structurally adequate, may be accepted at an adjusted price. The penalty adjustment will be calculated based on the following formula:

PA = V x ($10 (SS - TS))

where

PA = Penalty Adjustment ($/$m^3$)
V = Volume placed (m^3)
SS = Specified strength (MPa)
TS = Tested strength (MPa)

8.1.3 Bonus Adjustment. When the sub-lot exceeds the specified strength the Department will pay a bonus adjustment up to 5 MPa above the specified strength. The bonus adjustment will be calculated based on the following formula;

BA = V x ($2 (TS - SS))

where

BA = Bonus Adjustment ($/$m^3$)
V = Volume placed (m^3)
SS = Specified strength (MPa)
TS = Tested strength (MPa)

If there is an individual strength result more than 5 MPa below the specified strength, no bonus will be assigned for the sublot.

The bonus adjustment shall not exceed $10/$m^3$.

8.2 Payment for Cold Weather Concreting. If it is considered necessary by the Department to place concrete in cold weather, additional payment for Cold Weather Concreting will be paid. Payment shall be as detailed in the Appendix C and shall be considered payment in full for the complete protection, as outlined in this specification.

If, in the opinion of the Engineer, the placing of concrete under cold weather conditions is a result of unjustified delays, negligence, etc. on the part of the Contractor, the precautions described herein shall be followed and the cost thereof shall be borne in full by the Contractor. If the Contractor wishes to place concrete during cold weather, but if in the opinion of the Engineer, this is not required to meet the original completion date, additional payment will not be made for the Cold Weather Concreting but the precautions taken shall follow the methods outlined herein. The Contractor must receive an extension, prior to the original completion date, if the contract exceeds the original completion date, before consideration will be given to the payment of Cold Weather Concreting.

9.0 WARRANTY

SECTION 8 B PRECAST PORTLAND CEMENT CONCRETE, REINFORCED AND PRESTRESSED

1.0 DESCRIPTION

This section details the manufacture, delivery, storage and erection of precast reinforced concrete members, and precast prestressed concrete members.

2.0 REFERENCES

All reference standards shall be current issue or latest revision at the first date of tender advertisement. This specification refers to the following standards, specifications or publications:

- ASTM C 309, Specification for Liquid Membrane-Forming Compounds for Curing Concrete
- ASTM C 260, Air-Entraining Admixtures for Concrete
- ASTM C 494, Chemical Admixtures for Concrete
- ASTM C 1064, Temperature of Freshly Mixed Portland Cement Concrete
- CAN3-G279.2, Steel Wire in Mill Coils for Prestressed Concrete Railroad Ties
- CSA A23.1, Concrete Materials and Methods of Concrete Construction
- CSA A23.2, Methods of Test for Concrete
- CSA A23.3, Code Design of Concrete Structures
- CSA A23.4, Precast Concrete - Materials and Construction
- CSA A251, Qualification Code for Manufacturers of Architectural and Structural Precast Concrete
- CSA S6, Design of Highway Bridges
- CSA S269.3, Concrete Formwork
- Division 5 Section 7, Cast-in-Place Concrete
- PCI Manual for Quality Control for Plants and Production of Prestressed Concrete Products
- Division 5, Section 18: Cast in Place High Performance Concrete

3.0 SUBMISSIONS

3.1 Shop Drawings. At least four (4) weeks prior to the proposed commencement of manufacture, the Contractor shall submit the shop drawings directly to the Manager of Structural Engineering for review and approval. Drawings shall be stamped by a Professional Engineer registered to practice in Nova Scotia. Fabrication shall not proceed until the final approval of shop drawings. Approval of the shop drawings by the Department will not relieve the Contractor of the responsibility for correctness of dimensions, size of components and the details of manufacture. The shop drawings shall include: member details, reinforcing steel schedule, specification of prestressing strand, inserts, detensioning sequence if applicable, lifting points, as well as all hold-down details on draped or deflected strand.

3.2 Erection Procedure. At least four (4) weeks prior to the commencement of erection of the members, the Contractor shall submit to the Manager of Structural Engineering details of erection procedures including lifting methods.

3.3 Concrete Mix Design. The mix design shall be submitted in accordance with Division 5 Section 7, or Division 5 Section 18, for High Performance Concrete, at least four weeks prior to member manufacture. Precast concrete girders shall be constructed using high performance concrete (HPC) in accordance with the requirements of Division 5, Section 18, of the Standard Specification.

3.4 Certification. The Manufacturer shall be certified in accordance with CSA Standard A23.4-05 or latest edition prior to the time of tender. Proof of this certification shall be provided to the Manager of Structural Engineering by the Contractor prior to award of the contract.

3.5 Quality Control. The Manufacturer is responsible for quality control and shall implement a Quality Control Plan for all phases of the element manufacture. Quality control testing shall be conducted by the Manufacturer and quality assurance verification will be conducted by the Department.

For generic precast products (catch basins, pipe, culverts, arches, retaining walls, etc.) which are manufactured for stock, the Manufacturer shall provide copies of the Quality Control records before the products are approved for delivery to the site.

For precast elements manufactured for a specific project, the Manufacturer shall submit a project specific Quality Control plan to the Department at least four (4) weeks prior to commencement of manufacture.

As a minimum, the Quality Control plan shall include inspection and testing of all items referenced in this section of the Standard Specification and additional items referenced in the Special Provisions. Typical items contained in the plan would include:

- Concrete mixture design
- Mill certificate information from prestressing wire and reinforcing steel
- Shop drawings for each element showing dimensions, tolerances for the completed element, concrete cover, and pretensioning stress
- Records of detensioning
- Frequency of plastic and hardened concrete tests
- Plastic and hardened concrete test results (slump, temperature, total air content, mass density, compressive strength, air void parameters, rapid chloride permeability)
- Curing procedures
- Finishing, repairs procedures
- Storage procedures
- Delivery procedures where the manufacturer is responsible for delivery
- Certificate of accuracy for scales or measuring devices

The information shall be clearly presented on daily report forms and the manufacturer's quality control representative shall sign and date all items checked or tested. Depending on the size of the project, weekly or monthly summary reports may be required and the frequency of reporting shall be stipulated in the Quality Control Plan. The qualifications of the manufacturer's quality control representative shall be included in the Quality Control Plan.

Each individual element shall be legibly marked with a unique identification number or code and the date of manufacture. The number and the date of manufacture must remain legible until the element is installed on the project. All applicable reports for the element shall reference this identification mark.

4.0 MATERIALS

4.1 Concrete. Concrete shall conform to the provision of Division 5, Section 7, or Section 18, of these specifications except as varied herein. The Manufacturer is responsible to provide a mix design meeting the minimum 28 day compressive strength as indicated on the drawings.

4.2 Reinforcing Steel. Reinforcing steel and supports shall conform to Division 5, Section 5 of the Standard Specifications.

4.3 Prestressing Strand. Prestressing strand shall consist of seven wires having a centre wire and six outside wires, conforming to the latest edition of CSA G279.2. Prestressing strand shall be stabilized having a nominal diameter of 12.7 mm and ultimate tensile strength of 1860 MPa, unless otherwise specified. Prestressing strand shall be furnished either in coils, or on reels and shall be tagged to provide the following information: strand type, manufacturer, length, reel number, modulus of elasticity and ultimate strength. Each reel shall be accompanied by a stress-strain curve.

All prestressing strands must be clean and free from deleterious materials which may prevent bond between the strand and concrete. In cases where a bond breaker is required, the debonding material provided shall be in accordance with the approved shop drawings. All casting beds shall be covered with a non-absorbent, waxed paper or an approved equivalent to prevent form release agents from contaminating the prestressing strand. Prestressing strand having kinks, nicks, bends or other defects shall not be used.

4.4 Inserts. The Manufacturer shall supply and install all inserts in the member, as shown on the approved shop drawings. This item shall include lifting and handling devices as well as anchors for hold-down devices.

4.5 Lifting Devices. Lifting devices for the members shall be submitted with the shop drawings for approval by the Department.

5.0 CONSTRUCTION METHODS

5.1 Manufacture of the precast or prestressed concrete members shall be in accordance with CSA A23.4. "Precast Concrete Materials and Construction".

5.2 Manufacturing Restriction. Between October 31 and April 1, or when the air temperature is at or below 5°C or if there is a probability of it falling below 5°C within 24 hours, girders shall be manufactured and protected in suitable enclosures or shelters in order to maintain an air temperature above 5°C.

5.3 Notification. The Contractor shall notify the Department 48 hours before any phase of the member manufacture is commenced.

5.4 Dimension Tolerances. Dimensions shall be in accordance with CSA A23.4.

5.5 Prestressed Members

5.5.1 Pretensioning. The prestressing strand shall be accurately held in position and stressed by jacks. If multiple strands are tensioned simultaneously, provision shall be made to include the same initial stress in each. Strands shall be tensioned to the initial tension as indicated on the approved shop drawings prior to final stressing. The variation from the specified prestress force shall not be more than 5% on the parallel strand and 7% on the draped strand. The elongation of strand shall be adjusted for the effect of temperature variations if the temperature of the steel at the time it is stressed differs by more then 15°C from the time of placement of the concrete. After three days a minimum of three strands shall be inspected. If anyone shows significant movement then the remaining strands will be restressed.

One splice will be permitted providing that no splice falls within the girder. The strand to be spliced shall have the same lay or direction of twist. If strand splices are used elongations must be adjusted to account for slippage at the splice.

Rotation of a jacking ram shall be limited to not more than one revolution per 30 m of exposed tendon. Welding of strand shall not be permitted.

5.5.2 Detensioning. Detensioning shall not proceed until the concrete in the member has achieved the required release strength.

In single strand detensioning, the strand shall be released by heat-cutting, using a low oxygen flame or by jacking.

5.6 Concrete Placing. Concrete shall not be placed without the approval of the Department or its representative. Concrete placing methods and equipment shall be such that the concrete is conveyed and deposited at the required consistency without segregation or affecting the specified qualities of the concrete. The top surface of the members shall be free of laitance and finished in accordance with the specification for the type of element cast.

5.7 Concrete Curing. Concrete shall be cured to achieve the design, stripping, transfer of prestress (where applicable) and handling strength as per the Quality Control Plan approved by the Engineer.Concrete shall be cured for seven days at a minimum temperature of 10°C and the time necessary to achieve 70 percent of the specified compressive strength of the concrete.

High Performance Concrete (HPC) shall be cured using water or steam. All other concrete shall be cured in accordance with Division 5, Section 7. Side forms may be removed when the concrete strength reaches 20 MPa, however, water or steam curing must continue until release strength is achieved.

5.7.1 Water Curing. Water shall be clean and free from any materials which may cause discolouration or other harmful effects to the concrete. The members shall be maintained at the point of casting in an approved manner, designed to keep the units continuously wet and at a minimum temperature of 10EC. Water curing shall be continued until the required release strength is obtained. If tarpaulins are used to enclose girders they must be clean and free from holes. Tarpaulins shall remain over the member until the specified release strength is obtained.

5.7.2 Steam Curing. The members shall be maintained at the point of casting in an approved manner. The initial application of steam shall not commence until after initial set of the concrete. Steam shall not be discharged directly onto the concrete, forms or test cylinders. The ambient temperature within the enclosure shall be increased at a uniform rate not exceeding 20°C/hr. The maximum curing temperature shall not exceed 70°C. When release strength is reached, the ambient temperature shall be decreased at a maximum rate of 20°C/hr. The time-temperature relationship shall be recorded throughout the curing period.

5.8 Final Finish. Members shall be finished as indicated on shop drawings. Members shall be repaired and finished in suitable enclosures or shelters where the ambient temperature is maintained above 10°C, and cured at this temperature for at least 24 hours. Surfaces of members specified to receive sack rub finish (sacking) shall be water jetted at a pressure which will not damage the concrete but will expose air pockets. The member surface shall be sack rubbed

finished in accordance with CSA A23.1. Sacking materials can be cured with a curing compound approved by the Department.

5.9 Prestressed Girder Ends. At the ends of prestressed girders which are to be cast in concrete the prestressing strand shall be burned or cut off flush with the end of the girder and the strand shall be coated with a corrosion inhibitor. At the ends of girders which are not to be cast in concrete the strand shall be removed to a depth of 20 mm. All depressions left shall be filled with epoxy. All slag and rough concrete shall be ground off prior to the application of two coats of asphaltic material over the entire surface of the girder ends.

5.10 Acceptance. All members shall be inspected and accepted by the Department's representative prior to shipment.

5.11 Repairs. Repair work shall be performed in accordance with CSA A23.4 and Subsections 5.11.1 and 5.11.2 of this specification. Repairs of minor defects are referred to as cosmetic repairs, while extensive defects are considered structural.

5.11.1 Cosmetic Repair. Repair of defects and damage to precast members shall be performed with materials in a manner that will restore the specified quality of the product.

When the defect in a prestressed girder end is less than 15 mm, no repair is required and the beam will be coated with the standard end coating. When the defect exceeds 15 mm it shall be considered a structural repair.

5.11.2 Structural Repairs. No repairs of a structural nature shall be undertaken until the Department has evaluated the damage. A defect or damage will be considered structural when:

- Main reinforcement or prestressing strand are exposed.
- Any cracking in member bearing areas.
- Any cracking extending from one face of the element through to the opposite face.
- Cracks larger than 0.3 mm extending longer than 100 mm.
- Cracks larger than 0.2 mm in an area of tensile stress.

When an element is considered to have structural damage, repair procedures may include; grinding, epoxy coatings and epoxy injection. If epoxy is used it must be approved by the Department.

5.12 Identification, Handling and Storage. Members shall be identified by stencilling or painting as indicated on approved shop drawings. In addition, each member shall be identified by a direction marker to aid in placement. No member shall be lifted by using pickup points other than those indicated on the drawings or as approved by the Department. Prestressed girders shall be supported at a distance from the ends of the girder, not exceeding 1.5 times the depth of the member.

5.13 Transportation and Delivery. Members shall not be shipped until the concrete has reached the compressive strength specified by the designer for shipping. Compressive strengths will be determined by obtaining the average strength of two test cylinders cured with the member. Members shall be loaded and delivered in an approved manner. Damage incurred during transportation, handling and erection shall be the responsibility of the Contractor and shall be repaired to the satisfaction of the Department.

5.14 Erection of Members. Members stored on site shall be supported on properly constructed blocking, until they are placed in the structure. All members shall be erected by the Contractor in accordance with the approved erection drawing.

6.0 QUALITY CONTROL / QUALITY ASSURANCE

6.1 General. Quality assurance shall be conducted by the Department or its representative.

Quality assurance shall include verification of the Quality Control Plan and records submitted by the Manufacturer as well as access to all phases of member manufacture including:

- Prestressing operations, where applicable,
- Installation of reinforcing steel and support, inserts,
- Aggregate testing,
- Concrete production, placement and curing,
- Detensioning operations, where applicable,
- Finishing of members

- Dimensions and tolerances,
- Handling and storage, and
- Transportation and delivery.

7.0 METHOD OF MEASUREMENT

8.0 BASIS OF PAYMENT

8.1 General. Payment will be at the contract unit bid price for Reinforced Precast Concrete Members including Prestressed Concrete Girders. This price shall be full compensation for all labour, materials, plant and services necessary to manufacture, deliver and erect the members in the final position, as shown on the shop drawings, in accordance with this specification and the project special provisions.

8.2 Partial Payment. Where members are not delivered to the job site but are delivered to a temporary storage site on property owned or leased by the Department with the prior approval of the Engineer, partial payment for the fabrication and delivery of the members may be made, which payment will be the lesser of the Manufacturers invoice price less 15% or the tender amount less 15%. Payment will only be made at the Contractors request.

9.0 WARRANTY

SECTION 9 - WATERPROOFING CONCRETE BRIDGE DECKS

1.0 DESCRIPTION

This section details the surface preparation, application of tack coat, application of membrane reinforcement, application of hot rubberized asphalt (waterproofing) and placing protection boards on concrete bridge decks.

2.0 REFERENCES

All reference standards shall be current issue or latest revision at the first date of tender advertisement. This specification refers to the following standards, specifications or publications:

- CGSB 37-GP-50M

3.0 SUBMISSIONS AND DESIGN REQUIREMENTS

The Contractor shall give a minimum of 48 hours notice, in writing, prior to commencement of any waterproofing operations.

When the contract requires that an asphalt riding surface be stripped from the existing concrete structure deck, the Contractor shall give at least one week's notice to the Engineer, in writing, before commencement of the asphalt stripping operation.

Test results for the Water Absorption Test of the protection board shall be submitted to the Engineer one week prior to installation.

4.0 MATERIALS

4.1 Tack Coat for Bridge Deck Surface. The tack coat for the bridge deck surface shall be a Liquid Asphalt Primer in accordance with these specifications.

4.2 Hot Applied Rubberized Asphalt Waterproofing Membrane. The waterproofing membrane shall be a hot applied rubberized asphalt waterproofing membrane certified by the Manufacturer to conform to the requirements of CGSB 37-GP-50M. The waterproofing membrane shall be supplied to the job site in cakes, in the Manufacturer's sealed and labeled containers, ready for melting and application.

A sample of the waterproofing membrane shall be tested and approved by the Department or its representative before any is applied and incorporated into the work. Samples shall also be taken randomly from the heating and mixing kettle throughout the duration of the contract. The waterproofing shall conform to the requirements in Table 5.9.1

Table 5.9.1 Physical Requirements of Hot Applied Rubberized Asphalt Waterproofing Membrane

Table 5.9.1 - Physical Requirements

Test	Specification (mm)
Cone Penetration at 25°C	110 (max)
Cone Penetration at 50°C	160 (max)
Flow at 60°C	3 (max)

Test results shall be submitted by the Contractor to the Engineer one week prior to installation, however, the Engineer may take samples for testing at any time during the operation.

4.3 Protection Board. The protection board shall be formed of asphalt and fillers between two sheet materials. The board shall be uniform over its entire area to the thickness specified. The board shall remain free from perforations when applied.

The protection board shall be so packaged as to permit shipping, handling, and storage without damage to the contents.

The thickness of the protection board shall be 3.6 mm ± 0.4 mm. The width of the board shall be 1000 mm ± 150 mm and the length of the board shall be 1500 mm ± 150 mm. The board shall have straight edges, square corners, and edges free of burrs and breakaways.

Notwithstanding the size tolerance above, all sheets shall be of the same length and width with a tolerance of ± 5.0 mm and of uniform thickness within a tolerance of ± 0.25 mm.

The protection board shall have a water absorption of 5.0% maximum and shall show no deterioration or loss of mass during the Water Absorption Test.

5.0 CONSTRUCTION METHODS

All waterproofing operations shall be carried out when the air and concrete surface temperature are both 5°C or higher.

The applicator shall be approved by both the Engineer and the Manufacturer of the waterproofing system.

The Contractor shall perform the work in strict conformance with the Manufacturer's written instructions and this specification. In the event there is a discrepancy between the Manufacturer's written instructions and this specification, the more stringent requirement shall prevail. The Engineer shall have sole discretion on these matters.

The Contractor shall perform all of the operations involved in waterproofing in sequential order, such that there are no delays between individual operations other than those necessary to meet the requirements of these specifications.

Drainage holes through the deck shall not be plugged or covered by either waterproofing membrane or protection boards or asphalt concrete.

5.1 Surface Preparation - New Concrete Bridge Decks and Approach Slabs, Concrete Overlays and Existing Concrete Bridge Decks. The existing surface of the concrete shall be completely treated by abrasive blast cleaning, or such methods as approved by the Engineer to ensure that sound, latence - free concrete is exposed. If a curing compound had been used on the concrete surface, it shall be completely removed.

The flatness of the surface shall be checked after the surface preparation has been completed. Areas that do not meet a 3 mm in 3 m planeness shall be ground by the Contractor. For rehabilitation projects, where waterproofing is installed on decks that do not meet the required flatness or roughness, warranty will be void unless the deck is repaired. If the repair was not anticipated or specified at the time of the tender and the Department would like to maintain the product warranty, repair shall be extra work to the contractor upon agreement by the Department.

All dirt and debris shall be swept off and disposed of before tack coating. Immediately prior to the application of the tack coat, the concrete surface shall be cleaned with a jet of oil-free compressed air to remove all dust and foreign material.

Prior to the application of the waterproofing membrane, the concrete deck and approach slab shall be moist cured for a period of 7 days prior to air drying for an additional 7 days. Additional 7 day drying time can be waved for approach slabs only, as approved by the Engineer.

5.2 Modification of Joint Assemblies of Existing Concrete Bridge Decks. Any modifications to the expansion joint assemblies shown on the contract drawings shall be carried out prior to waterproofing.

5.3 Approval. Waterproofing shall not commence until the Engineer has approved all preparation work.

5.4 Tack Coating of Prepared Concrete Deck. A tack coat of Liquid Asphalt Primer shall be applied to the concrete deck at a rate of 0.25 L/m^2 with approved equipment which shall provide a uniform application at the required rate. The tack coat shall be applied when the concrete is dry and clean. Waterproofing equipment shall not be permitted upon the tack coat until it has fully cured.

5.5 Heating and Mixing of Hot Applied Waterproofing Membrane. Cakes of the waterproofing membrane shall be melted on the job site in a double boiler oil heat transfer type mechanically agitated heating and mixing kettle. This unit shall keep the contents continuously agitated until the material can be drawn free flowing and lump free from the mixing kettle at a temperature within the range recommended by the Manufacturer. The kettle shall be equipped with functional permanently installed dial type thermometers to measure the temperature of the melted compound and the oil.

5.6 Application of Hot Applied Waterproofing Membrane and Membrane Reinforcement. The waterproofing membrane shall not be applied until the tack coat of liquid asphalt primer has cured completely, and is free of any surface moisture and dirt. The waterproofing shall be applied within the temperature range recommended by the Manufacturer in the following sequence:

- Apply 2 coats of the waterproofing along the edge of the deck for a width of 300 mm and up the face of the curbs or barrier walls to a height of 80 mm.
- Apply the waterproofing to the tack coated deck, so as to form a uniform film having a thickness of 5 ± 1 mm, unless otherwise specified and approved by the Engineer.

5.7 Application of Protection Board. Protection boards shall be laid on the waterproofing membrane while the surface is still tacky with the length of the board transverse to the deck centerline. Materials or substances shall not be applied to remove the tackiness prior to installation of the protection board. Overlapping of edges longitudinally and transversely is not required, butt joints shall be used. The protection board edge shall be within 6 mm of all curbs, drain verticals, and expansion joint verticals. Protection boards shall be placed such that the longitudinal (direction of traffic flow) joints are staggered a minimum of 150 mm.

5.8 Paving of Deck. Asphalt concrete paving of bridge decks shall be done in accordance with Department Specifications. Once protection is applied, the deck shall only be exposed to traffic from equipment required for paving operation. Asphalt concrete thickness shall be as specified in the Design Documents. Asphalt concrete shall be placed without disturbing or damaging the waterproofing system. The Contractor shall immediately remedy any disturbance and/or damage to the waterproofing system before continuing with paving operations.

5.9 Sealing Interface Between Asphalt Concrete and Curb. Within 24 hours of asphalt concrete paving of the deck, the interface between the asphalt concrete and the face of the curb shall be sealed by pouring waterproofing along the joint such that the material extends 25 to 50 mm from the face of the curb and to a thickness of 2 to 4 mm above the asphalt concrete.

6.0 QUALITY CONTROL / QUALITY ASSURANCE

6.1 Protection Board. The protection board shall be tested using the Water Absorption Test**.** Two specimens of protection board 150 mm x 50 mm shall be cut. The specimens shall be oven dried to constant mass at 60ºC ± 1.1ºC. The mass of the specimens before and after drying shall be recorded. The specimens shall then be submerged horizontally under 25 mm of water three times as follows:

- First Immersion: The water temperature shall be 23ºC ± 2ºC and the duration of the immersion shall be 4 hours.
- Second Immersion: The water temperature shall be 23ºC ± 2ºC and the duration of the immersion shall be 20 hours.
- Third Immersion: The water temperature shall be 60ºC ± 2ºC and the duration of the immersion shall be 80 hours.

After each immersion the specimens shall be towel dried and the mass recorded.

The percent mass loss or gain from the original oven dry mass shall be recorded.

The Engineer may take samples for testing at any time during the operation.

7.0 METHOD OF MEASUREMENT

Waterproofing concrete bridge decks shall be measured for payment by the square metre. The area measured will be the surface of the deck covered with waterproofing material measured along the plane of the deck surface.

8.0 BASIS OF PAYMENT

Waterproofing concrete bridge decks will be paid for at the contract unit bid price per square metre for Waterproofing Concrete Bridge Decks which price shall include the preparation of the surface, the supply and placing of tack coat, the supply and placing of the membrane reinforcement, waterproofing and protection boards, sealing of interface, and traffic control, and shall include all equipment, labour, material and services necessary to waterproof the deck to the satisfaction of the Engineer.

If the waterproofing is damaged, it shall be repaired immediately, prior to final paving, to the satisfaction of the Engineer and at no extra cost to the Department.

9.0 WARRANTY

SECTION 10 - CORRUGATED STRUCTURAL PLATE PIPE STRUCTURES

1.0 DESCRIPTION

This section details the design, supply and installation of structural plate pipe and deep corrugated structural plate structures, preparation of a bed on which to lay the structural plate pipe and backfilling of the structural plate pipe.

2.0 REFERENCES

All reference standards shall be current issue or latest revision at the first date of tender advertisement. This specification refers to the following standards, specifications or publications:

- ASTM A563M, Carbon and Alloy Steel Nuts
- ASTM A123, Zinc Coating
- ASTM A153 Zinc Coating of Hardware
- ASTM A449, Bolts
- ASTM A563, Nuts
- ASTM F568, Carbon and Alloy Steel Externally Threaded Metric Fasteners
- ASTM A568M, General Requirements for Steel, Carbon and High Strength Low Alloy Hot Rolled Sheet and Cold Rolled Sheet
- ASTM A761M, Corrugated Steel Structural Plate, Zinc Coated, for Field Bolted Pipe, Pipe Arches, and Arches
- ASTM A796, Corrugation Design Properties
- CSPI Handbook, Corrugation Design Properties
- ASTM B209M, Aluminum Plate
- ASTM B221, Aluminum Ribs
- ASTM B746/B746M, Corrugated Plate and Hardware
- ASTM B790/B790M, Aluminum Plate
- ASTM F1554, Grade 36, Anchor Bolts
- CSA G40.20-M, General Requirements for Rolled or Welded Structural Quality Steel
- CSA G164, Hot Dip Galvanizing of Irregularly Shaped Articles
- CSA G401, Corrugated Steel Pipe Products
- CAN/CSA S6, Canadian Highway Bridge Design Code
- Division 3 Section 2, Gravel Type 1, 1S & 2

3.0 SUBMISSIONS AND DESIGN REQUIREMENTS

It shall be the responsibility of the Design Engineer to provide the following information on the plans:

- General Arrangement of the structure including profile, plan layout, elevations, and sections
- Foundation design/details including specification for foundation and base preparation
- Wingwall and headwall details
- Design Criteria/Parameters.
- Connection/assembly details
- Parts list
- Backfilling requirements
- Details of structure assembly and installation including lifting points (if appropriate)
- Design calculations
- Design codes
- Magnitude and location of all loads to be carried by the structure
- Backfill parameters
- Soil parameters
- Allowable bearing capacities under structure/footing, Serviceability Limit State (SLS) and Ultimate Limit State(ULS)

- Total differential settlement
- Seismic Acceleration Coefficient value (a/g)
- All other information as requested in the tender documents or as requested by the engineer

Structures with a span or diameter of over 3 meters shall be designed in accordance with the Canadian Highway Bridge Design Code (CAN/CSA-S6- Latest revision), and shall be designed for a 75 year service life.

All structures shall be concrete or protected with concrete up to 150 mm above the ordinary high water mark. This requirement may be waived for Aluminum Alloy Structural Plate structures.

3.1 General. The bidder shall bid the approved structure type as per the Special Provisions (or an approved alternate) and shall indicate the proposed structure in the bid proposal. The system bid shall be the system built. No substitutions will be allowed. All corrugated plate structures shall be built in accordance with the approved plans and shop drawings.

All appurtenances behind, in front of, under, mounted upon or located within the structural plate span or the engineered backfill zone such as drainage structures, utilities, piles, footings, or other appurtenances shown on the plans shall be accounted for in the structural design and detailed on the shop drawings. The structure shall follow the general dimensions of the structure envelope shown on the tender plans.

3.2 Fabrication. The contractor shall submit design calculations and shop drawings directly to the Manager of Structural Engineering for review at least three (3) weeks after the tender award. Fabrication shall not proceed until the final approval of design and assembly drawings. Approval of the design and assembly drawings by the Department shall not be construed as relieving the Contractor of the responsibility for adequacy or completeness of the design, accuracy of dimensions, size of components and the details of manufacture and assembly.

The design and assembly drawings shall be stamped and signed by a Professional Engineer, licensed to practice in Nova Scotia.

3.3 Testing, Inspection, and Certification. It shall be the Contractor's responsibility to provide all the required testing and inspection services to satisfy the manufacturer and the Department that the work is in compliance with the Departments and the manufacturers specifications.

The Contractor shall submit a report describing the proposed Testing and Inspection program to both the Department and Manufacturer's Representative for their review prior to the commencement of construction.

At the Contractor's expense and subject to their coordination, a Manufacturer's Representative shall be present periodically at all key intervals of construction, including, but not limited to, foundation preparation, base preparation, assembly of the structure, including verifying bolted connections, placement and compaction of critical zone backfill materials, embankment installations, the placement and compaction of embankment materials, and placement and compaction of overfill materials above the structure. Upon completion of installation, the Contractor shall provide the Engineer with an "unqualified" letter from the Manufacturer certifying that the structure has been assembled, installed and backfilled in accordance with their written instructions, referenced Codes and this Specification. All test results shall accompany the Certificate of Compliance and shall be current and relevant. At their expense, the Contractor shall undertake any additional tests, investigations, etc. as is necessary to satisfy the Manufacturer's Representative of the integrity of the installation. The letter shall be stamped and signed by a Professional Engineer, licensed to practice in Nova Scotia.

4.0 MATERIALS

Site specific design considerations and installation instructions shall be as per the final approved drawings while adhering to all applicable Code References (Section 2.0).

4.1 Aluminum Alloy Structural Plate. The work of this Section covers pure aluminum alloy Structural Plate Structures as fabricated from type 5052 corrugated aluminum plate, type 6061 aluminum ribs (as applicable), heavy hex permanent assembly hardware and anchor bolts (as applicable).

4.2 Galvanized Steel Structural Plate. The work of this Section covers hot-dipped galvanized steel Structural Plate Structures as fabricated from steel plate (zinc coated after fabrication to an average weight of 915g/m² total, both sides of sheet), heavy hex galvanized permanent assembly hardware and galvanized anchor bolts (as applicable).

4.3 Copolymer-Coated Steel Structural Plate. The work of this Section covers the two-coat system to provide additional protection to corrugated steel plate. The base zinc coating is retained while an additional 8 mil minimum top coat of ethylene acrylic acid copolymer is applied.

4.4 Concrete. Where concrete elements are required they shall be as shown on the shop drawings and in conformance with Division 5, sections 7, 8, and 18.

4.5 Structural Backfill and Bedding. Unless otherwise specified, materials shall conform to all requirements of Division 3 Section 2 (Type 2 Gravel) and manufactures requirements, referred to hereafter as structural fill.

5.0 CONSTRUCTION METHODS

Full construction method details, including the use of heavy equipment such as cranes or off-road trucks to be used during construction or for which the structure is to serve as temporary crossing, shall be reviewed by the Structural Plate manufacturer prior to construction.

The Structural Plate span shall be constructed in conformity with the lines, grades, details and dimensions as shown on the Department approved final design drawings. The Contractor shall make use of the guidance services provided by the supplier and provide 48 hours notice to the supplier and the Department of the intended date for start of erection.

5.1 Foundation Excavation. Excavation for the Structural Plate structure shall be accordance with the requirements of Division 2 Section 13 and in close conformity to the lines and grades shown on the approved drawings.

5.2 Foundation Preparation. Full Invert structures shall be installed as per the manufactures instructions and geotechnical requirements on a prepared base constructed to an elevation determined by the Engineer. The base shall be a stable area free of organic matter and large rocks. The area shall be overlaid with a 300 mm thick layer of Structural Fill. This layer shall be preshaped in the transverse direction to accommodate the curvature of the pipe. The layer shall be compacted to 95% of Standard Proctor Density, or as directed by the Engineer, and an additional 200 mm thick layer of uncompacted Structural Fill shall be placed for the portion of bedding in direct contact with the pipe wall. In general, the area uncompacted shall be the middle 1/3 of the diameter for round pipe and the middle half for pipe arches and horizontal ellipses.
Foundations for open invert structures shall be designed and detailed by an engineer licensed to practice in Nova Scotia in accordance with CSA S6 and the geotechnical requirements.

Prior to construction, it shall be the Contractor's responsibility to ensure the foundation bearing is met per the final design, under the direction and with the written approval of a geotechnical engineer licensed to practice in Nova Scotia.

5.3 Structural Plate Assembly. Structural plate assembly shall be carried out in accordance with the manufactures recommendations. On completion of assembly and prior to the placement of approved backfill, it shall be the Contractor's responsibility to ensure the required hardware torque has been satisfied under the direction and with the written verification of a certified inspection agency.

5.4 Backfilling/Compaction of Backfill. Material is not to be dumped on top of the structure but shall be placed in layers starting no closer than 1500 mm from the side walls. Truck end-dumping or dozer placement directly against the sides of the structure shall not be permitted.

Structural fill shall be placed in layers which shall not exceed 200 mm in thickness before compaction. Backfill compaction shall be accomplished without disturbance or distortion of any structural component including potential embedded reinforcement. Heavy equipment shall avoid the ends of the structural plate pipe so as to reduce pressure against the end of the barrel.

Fill depth shall be maintained approximately equal on each side of the structure at all times. The maximum difference in elevation shall be 400 mm.

The Contractor shall not allow surface runoff from adjacent areas to contact the Structural Plate or enter the backfill zone.

Frozen backfill shall not be used.

Areas close to the pipe shall be compacted using vibrating or tamping equipment running parallel with the length of structure at all times.

Backfill material shall be within ± 2% of optimum moisture content during compaction or as directed by the Engineer.

Each fill layer shall be compacted to 95% of Standard Proctor Density of, or as directed by the Engineer.

The shape of the structure shall be monitored during backfilling and compaction by hanging rows of plumb-bobs on the inside of the pipe or by other methods, as approved by the Engineer.

When the backfill reaches 3/4 of the rise, all propping inside the structure shall be removed.

When the backfill reaches 3/4 of the rise, spreading and compaction over the top arch shall be made in a direction perpendicular to the length of the structure, i.e. parallel to corrugations, until the finished height of critical backfill zone is reached as shown on the plans.

A minimum layer of 300 mm of backfill shall exist at all times between the spreading equipment and the structure for spans less than 2500 mm. For spans greater than 2500 mm a minimum of 1000 mm shall be required. This layer of backfill shall be built up evenly from both sides. The equipment used shall not be heavier than a D-4 caterpillar dozer for spreading material and not heavier than a Buffalo-Bomag BW-75G for compaction.

For a cover greater than 600 mm, the Engineer may permit heavier equipment. Actual sizes of equipment and operating distance from the structure will be determined by the Engineer using information provided by the monitoring of the shape.

The pipe shape shall be maintained during backfilling. The tolerance is ± 2% of the rise for round pipe, arches and horizontal ellipses and ± 2% of the span for vertical ellipses.

If the backfill is not to be placed immediately to the finished road elevation, a wearing and traveling surface shall be built over the critical backfill zone in order to keep the latter operative and adequate to perform its function as a safe structure (or as a soil arch) at all times.

6.0 QUALITY CONTROL / QUALITY ASSURANCE

6.1 Quality Control. Quality control shall be the responsibility of the Contractor. The Contractor shall submit to the Department a detailed Quality Control procedure for structure assembly and installation. This procedure is subject to Departmental approval prior to commencing work. Upon approval of the Quality Control procedure the Department reserves the right to carry out Quality Assurance Testing as required.

6.2 Quality Assurance. Quality assurance will be the responsibility of the Department.

7.0 METHOD OF MEASUREMENT

The preparation of all shop drawings, erection drawings, erection procedures, calculations, etc. shall not be measured for payment but shall be considered as incidental to the work. The supply of any additional materials for the Structure not shown on the drawings, but deemed necessary for the erection shall not be measured for payment but shall be considered as incidental to the work.

In the case of design-build tenders, the entire Structure on a project excluding the backfill material volume and the foundation excavation shall be measured for payment as one unit for design, supply and erection. Otherwise, the method of measurement for pipe shall be per lineal meter measured along the bottom centerline of the structural plate pipe in place.

The backfill material volume shall be measured in accordance with Division 3 Section 10.

Foundation excavation shall be measured in accordance with Division 2 Section 13.

8.0 BASIS OF PAYMENT

Structural plate pipe will be paid for at the contract unit bid price per lineal metre for Structural Plate Pipe which price shall include supply of all materials, transportation, erection, labour and all incidentals necessary to complete the work to the satisfaction of the Engineer. The Contractor may be granted partial progress payments, as determined by the Engineer, for materials delivered to the job site.

Payment for Foundation Excavation, Water Control and Structural Fill will be based on the appropriate contract unit bid prices for these items.

9.0 WARRANTY

Upon completion of the Structural Plate Structure and visual acceptance of the work in accordance with these specifications, a one year maintenance period shall begin. During this period any failure in the Structural Plate Structure including, but not limited to deficiency of cast-in-place concrete and associated components, excess of tolerance on horizontal/vertical alignments, etc. shall be repaired or reconstructed at the Contractor's expense to the satisfaction of the Engineer. Costs associated with labor, materials, transportation, traffic control and any other work required for repair or reconstruction of unacceptable areas shall be paid by the Contractor.

9.1 Final Acceptance. The Department, or its representative, and the Contractor will meet and inspect the structure one year after the completion of the work. All areas that have failed shall be repaired at the Contractor's expense at no cost to the Department. If the Contractor and the Department do not agree on what areas are failed, the Department's decision shall be final.

The final acceptance of the original structure by the Department shall relieve the Contractor from all maintenance responsibility with respect to the original Structure however, the Contractor shall be held responsible to maintain repaired areas for a period of 12 months after the repairs are made.

9.2 Liability. During the period of construction and the one year maintenance period the Contractor shall be responsible for processing any and all claims for property damage and/or bodily injury caused by the failure of the structure including, but not limited to, motor vehicles or pedestrians. The contractor shall be responsible for the payment of all property damage and bodily injury and agrees to save and hold harmless the Department from all such claims as set out in Division 1 Section 4 Subsection 24 of these Specifications. Claims not handled by the Contractor or their representative efficiently or expediently will be settled by the Department and the costs recovered from the Contractor.

9.3 Warranty Holdback. Notwithstanding anything to the contrary, as stated in Division 1 Section 3 Subsection 6 of the Standard Specification, the warranty holdback for the structure will be held and retained by the Minister until the maintenance period has expired. The warranty holdback will be held to ensure that sufficient funds will be available to the Department in the event of non-performance of the structure. The Contractor is responsible for all costs including the materials and haul and for the repair of all failures and damages resulting from negligence or faulty workmanship by the Contractor that adversely affects the integrity of the structure which occurs, and is evident prior to, the expiration of the one year maintenance period. The amount of warranty holdback shall be as specified in the Special Provisions.

SECTION 11 - METAL TRAFFIC BARRIERS AND METAL RAILINGS FOR STRUCTURES

1.0 DESCRIPTION

This section details the requirements for the fabrication and erection of metal railings for structures, including posts, anchors, fasteners and ancillaries.

2.0 REFERENCES

All reference standards shall be current issue or latest revision at the first date of tender advertisement. This specification refers to the following standards, specifications or publications:

- Nova Scotia Highway Construction and Maintenance Standard Specification, Division 5, Section 3, Structural Steel
- CSA G40.20/G40.21, General Requirements for Rolled or Welded Structural Quality Steel/Structural Quality Steel
- CAN/CSA G164-M, Hot Dip Galvanizing of Irregularly Shaped Articles
- CSA W47.1, Certification of Companies for Fusion Welding of Steel Structures
- CSA W47.2-M, Certification of Companies for Fusion Welding of Aluminum
- CSA W59, Welded Steel Construction (Metal Arc Welding)
- CSA W59.2-M, Welded Aluminum Construction
- ASTM A27/A27M, Steel Castings, Carbon, for General Application
- ASTM A307, Carbon Steel Bolts and studs, 60,000 psi Tensile Strength
- ASTM A314, Stainless Steel Billets and Bars for Forging
- ASTM A325, Structural Bolts, Steel, Heat Treated, 120/105 ksi Minimum Tensile Strength
- ASTM B117, Practice for Operating Salt Spray (Fog) Apparatus
- ASTM B108, Aluminum-Alloy Permanent Mold Castings
- ASTM B209, Aluminum and Aluminum-Alloy Sheet and Plate
- ASTM B221, Aluminum and Aluminum-Alloy Extruded Bars, Rod, Wire, Profiles and Tubes
- CAN/CGSB 1.181, Ready-Mixed Organic Zinc-Rich Coating
- CAN/CSA S6, Canadian Highway Bridge Design Code.
- CAN/CSA O80 Series, Wood Preservation

3.0 SUBMISSIONS AND DESIGN REQUIREMENTS

3.1 Submissions. The Contractor shall submit four complete sets of shop drawings showing full details and erection/assembly of all components of the railings to the Engineer for review and approval at least four (4) weeks prior to commencing fabrication. Drawings shall be stamped by a Professional Engineer registered to practice in Nova Scotia. Fabrication shall not proceed until the Engineer issues final approval of the shop drawings.

3.2 Design. Metal traffic barriers shall have been crash-tested according to the conditions specified in CAN/CSA S6.

3.3 As-Built Drawings. As-built drawings shall be prepared by the contractor for all work incorporated in the completed structure that requires submission of working drawings and for all changes from the original contract requirements.

The as-built drawings shall be submitted to the Engineer in an approved electronic format and in reproducible format, on Mylar or approved equivalent, prior to final acceptance of the work.

The as-built drawings shall bear the seal and signature of a Professional Engineer licensed to practice in Nova Scotia.

4.0 MATERIALS

4.1 Metal Traffic Barrier. Materials shall be according to the barrier specified. Modification of the barrier material shall not be made without the written permission of the Engineer.

4.2 Barrier Wall Railing. Parapet Wall Railing, Pedestrian Railing and Bicycle Railing.

4.2.1 Steel Railing. Steel, unless otherwise approved, shall be according to CSA G40.21.

- Rails shall be Grade 350W.
- Rolled sections shall be Grade 300W.
- Galvanized bolts and nuts shall be according to ASTM A325 or ASTM A307.
- Cast steel posts shall be according to ASTM A27, Grade 65-35.

Set screws shall have a zinc-nickel plating applied to a thickness of 10 µm. The plating shall show no red rust after 1000 h exposure to salt spray according to ASTM B117.

All steel surfaces shall be protected by hot dipped galvanizing according to CSA G164, providing a minimum zinc mass of 610g/m^2.

4.2.2 Aluminum Railing. Extruded aluminum tubing shall be 6061-T6 or 6351-T6 alloy according to ASTM B221.

Aluminum sheet and plate shall be 6061-T6 alloy according to ASTM B209.

Cast posts shall be A444 alloy T-4 heat treated according to ASTM B108.

4.3 Stainless Steel Fasteners. Bolts, set screws, nuts and washers shall be Type 304 stainless steel according to ASTM A314.

4.4 Anchorage Assembly. Anchor bolts shall be according to ASTM A325. The anchorage cage shall be according to AISI/SAE 1030. The bolts and cage shall be hot dipped galvanized according to CSA G164. The anchorage assembly shall be supplied with the bolts installed in a template.

4.5 Grout. Grout shall be non-staining, non-shrink cement based grout or non-staining, non-shrink epoxy based grout as specified in the Contract, or as approved by the Engineer.

4.6 Zinc-Rich Coating. Zinc-rich coating shall be according to CAN/CGSB 1.181.

5.0 CONSTRUCTION METHODS

5.1 General. Railing components shall be protected from damage and distortion during handling, transportation, storage and installation.

When bedding grout is placed under post bases to obtain the proper grade and alignment, the grout shall have a minimum thickness of 5 mm and a maximum thickness of 15 mm. The mixing, surface preparation, installation and curing shall be according to the manufacturer's written instructions.

The work shall include installation of the anchorage assemblies.

5.2 Alignment. The railing shall be installed to the elevations and alignment shown on the contract drawings with a tolerance of ± 6 mm and with no kinks or other visible breaks in alignment throughout the length of the installation.

5.3 Anchorages.

5.3.1 General. Anchorages shall be accurately and securely located.

5.3.2 Anchorages Installed Before Concrete Placement. A prefabricated anchor insert of the type shown on the contract drawings or an approved equal shall be used to secure the bridge railing posts to the concrete. Components shall be installed prior to placing concrete and shall be securely tied to reinforcing steel. Anchorage assemblies shall be positioned with templates and installed securely in the formwork to maintain the position of the anchors during placement of concrete.

Hi-tensile bolts and round washers shall be given a heavy coating of white non-staining grease.

5.3.3 Anchorages Installed After Concrete Placement. Holes shall be core drilled, the anchoring agent placed and the anchors properly positioned at locations specified. The placement of the anchoring agent and the anchors shall be according to the manufacturer's written recommendations except as modified herein. The holes shall be free of

dust and debris immediately prior to placement of the anchoring agent. When the anchoring agent fails to fill the hole after insertion of the anchor, additional anchoring agent shall be immediately added to fill the hole.

When a cement based grout is used as the anchoring agent, the holes shall be pre-dampened for a period of one hour and free water shall be removed prior to the application of the cement based grout.

When an epoxy grout is specified as the anchoring agent, the inside surface of the holes shall be roughened and shall be dry prior to the application of the epoxy grout.

Where anchors are inserted into horizontal or inclined holes in a vertical face, the anchors shall be maintained in position during the setting of the anchoring agent. Loss of anchoring agent from the holes shall be prevented.

5.3.4 Anchorages Installed in Timber. Holes for bolts shall be drilled with a bit 1.5 mm larger in diameter than the bolt. The diameter of the recessed holes for the bolt heads shall be no greater than 10 mm larger than the width of the bolt head.

Where oil treatment has been used on the wood curbing, the cut surfaces of the wood shall be given three coats of creosote oil. Each coat shall be allowed to dry before the next coat is applied.

Repair to cuts in material treated with water-borne preservatives shall conform to CAN/CSA-O80.

5.4 Fabrication of Railings.

5.4.1 General. The railing system components shall be fabricated according to the details specified. Field modification shall only be done when approved by the Engineer.

When welding is required, the fabricator shall be certified according to CSA W47.1 for steel railings or W47.2 for aluminum railings.

5.4.2 Steel Components. Unless otherwise specified in the contract, fabrication and welding shall be according to Nova Scotia Highway Construction and Maintenance Standard Specification, Division 5, Section 3, Structural Steel.

All flame cut edges shall be as smooth and regular as those produced by edge planing and shall be free of slag.

When a galvanized surface is damaged, the exposed steel shall be immediately cleaned of all rust, oil and grease and coated with a 75 µm maximum thickness of zinc-rich paint. After erection, the surface shall be given a second coating of zinc-rich paint of the same thickness.

5.4.3 Aluminum Components. Aluminum railings and posts shall be thoroughly cleaned of all discolouration by approved methods and all marks and scratches shall be removed. The Contractor may, at their own expense, apply to the cleaned surface, a coating, two passes or more, of a clear alkali-resistant non-yellowing methacrylate type lacquer. The railings, when erected, shall have a clean degreased aluminum surface of uniform appearance and texture.

Components of railings shall be joined by rivetting, bolting, expanding or welding as shown on the approved shop drawings.
Special aluminum alloy fasteners may be used provided they are approved by the Engineer.

Where tubular balusters are fastened to horizontal rails by expanding the tubes, the drilled holes shall be no more than 1 mm greater than the nominal diameter of the baluster tube. A standard self-feeding tapered roll expander shall be used to expand the balusters to give a tight fit in all rails.

Sheet or plate material may be sheared, sawn or cut with a router; however sheet or plate materials more than 10 mm thick shall only be sawn or routed. Cut edges shall be true and smooth, free from excessive burrs or ragged edges.

Re-entrant cuts shall only be used when unavoidable, and when used, a fillet shall be provided by drilling prior to cutting.

Aluminum alloys shall not be flame-cut.

Bolt holes in 10 mm or thinner material may be drilled or punched to finished size. In material thicker than 10 mm, the holes shall be drilled to finished size or sub-punched smaller than the nominal diameter of the fastener and reamed to size.

During fit-up, holes shall not be drifted in such a manner as to distort the metal. Holes misaligned less than 2 mm may be reamed to render a reasonable fit.

The shank of bolts shall be long enough to provide full bearing in the connection, and where the shank extends beyond the surface being clamped, washers shall be used to ensure proper clamping. Washers shall be used under the nuts.

Welding of aluminum shall be permitted only where shown on the approved shop drawings.

Inert Gas Shielded Arc Processes and the quality of the welding shall be according to CSA W59.2-M.

5.5 Contact Surfaces. When aluminum would otherwise come in contact with dissimilar metal surfaces, the contacting surfaces shall be separated from each other by use of a synthetic rubber or neoprene gasket.

When aluminum would otherwise come in contact with wood, concrete or masonry, the contact surfaces shall be separated by means of a gasket, as above, or the aluminum surface shall be given a heavy coat of alkali-resistant bituminous paint prior to installation. The paint shall be applied as it is received from the Manufacturer without the addition of any thinner.

Nylon Bushings shall be used in bolt holes, between the aluminum posts and the galvanized bolts.

6.0 QUALITY CONTROL / QUALITY ASSURANCE

7.0 METHOD OF MEASUREMENT

Railings shall be measured for payment by the linear metre of completed rail system. The quantity for payment shall be the length measured along the line and grade of the top rail along both sides of the structure from end to end of the rail.

8.0 BASIS OF PAYMENT

Railings will be paid for at the contract unit bid price per linear metre of completed rail system installed. The price shall include supply and installation of the rail, posts, anchorages, fasteners, galvanizing, tools, equipment, and all other accessories forming part of the completed rail system to the satisfaction of the Engineer. The Contractor may be granted partial progress payments, as determined by the Engineer, for materials delivered to the job site.

The Contractor shall be responsible for the railing, posts and all related material during transportation and after delivery to the job site until the completed railing has been accepted by the Engineer. The Department shall not be liable for the replacement of any parts if such becomes necessary at any time during the contract.

9.0 WARRANTY

SECTION 12 - UNDERGROUND DRAINAGE SYSTEMS

1.0 DESCRIPTION

This section details the supply, installation, modification and removal of culvert and storm sewer systems.

Culvert and storm sewer systems shall include all pipe, couplings, catch basins and grates, manholes and covers and any other related material forming an integral part of the system.

2.0 REFERENCES

All reference standards shall be current issue or latest revision at the first date of tender advertisement. This specification refers to the following standards, specifications or publications:

- AASHTO M-196, Corrugated Aluminum Pipe for Sewers and Drains
- ASTM F 679, PVC Large Diameter Plastic Gravity Sewer Pipe and Fittings
- ASTM F 794, PVC Large Diameter Ribbed Gravity Sewer Pipe and Fittings
- ASTM F 949, PVC Corrugated Sewer Pipe with a Smooth Interior and Fittings
- ASTM D 3034, Type PSM, PVC Sewer Pipe and Fittings
- CSA-A257.2, A257.3 Standards for Concrete Pipe
- CSA-B182.2, PVC Sewer Pipe and Fittings
- CSA-B182.4, Profile PVC Sewer Pipe and Fittings
- CSA-B182.8 Profile Polyethylene Storm Sewer and Drainage Pipe and Fittings
- CSA-G401-07, Corrugated Steel Pipe Products
- Division 1 Section 5, Environmental Protection
- Division 2 Section 12, Foundation Excavation
- Division 5 Section 7, Cast in Place Concrete
- Drawing S-2009-142
- Drawing S-2009-051
- Drawing S-2009-144
- Occupational Health and Safety Act, Chapter 3 Part 9 Excavation
- UNI-B-5, UNI-B-6, UNI-B-9, Polyvinyl Chloride Pipe

3.0 SUBMISSIONS AND DESIGN REQUIREMENTS

3.1 Cast in Place Concrete Catch Basins shall be designed to carry a minimum load of 38,500 kg. The design shall be completed by a Professional Engineer acceptable to the Department. Seven copies of the drawings shall be submitted to the Department for approval. No work shall commence until approval is received for the drawings.

4.0 MATERIALS

4.1 Pipe

The following table represents a guideline for cross culvert materials that may be utilized based on classification of road:

Road Class	Culvert Material Type
100 Series Highway	Reinforced Concrete
Trunk Roads	Reinforced Concrete
Route Roads	Reinforced Concrete, Corrugated Aluminum, or High Density Polyethylene (double walled)
Local Roads	Reinforced Concrete, Corrugated Aluminum, or High Density Polyethylene (double walled), Corrugated Aluminized Steel Pipe*

*The PH of the water shall be between 5 and 9

4.1.1 Reinforced Concrete Pipe. Reinforced Concrete Pipe shall conform to CSA-A257.2 and A257.3. and shall be one of three classes: 65D, 100D or 140D as specified in the contract tender items.

4.1.2 Corrugated Steel Pipe. Corrugated Steel Pipe shall conform to CSA-G401-07, except as modified herein. The pipe shall be aluminized Type 2 Riveted Corrugated Steel Pipe or aluminized Type 2 Helical Lockseam Corrugated Steel Pipe.

The nominal wall thickness for Corrugated Steel Pipe shall be as shown in Table 5.12.1.

Table 5.12.1 - Corrugated Steel Pipe

Dia. (mm)	Wall Thickness (mm)	
	Aluminized Type 2 (68 x 13 mm Corrugation)	Aluminized Type 2 (125 x 26 mm Corrugation)
300	1.6	-
400	1.6	-
500	1.6	-
600	1.6	-
800	2	-
900	2	-
1000	2	-
1200	2.8	-
1400	3.5	2.8
1600	3.5	2.8

The couplers shall be corrugated band couplers or universal dimple couplers complete with angle flanges and bolted connectors. Couplers shall be 600mm wide for all pipe sizes. If corrugated couplers are used the pipe ends shall be re-corrugated to accept the coupler.

4.1.3 Corrugated Aluminum Alloy Pipe. Corrugated Aluminum Alloy Pipe shall conform to AASHTO M-196. except as modified herein.

The nominal wall thickness for Corrugated Aluminum Alloy Pipe shall be as detailed in Table 5.12.2.

Table 5.12.2 - Corrugated Aluminum Alloy Pipe

Diameter (mm)	Wall Thickness (mm)
300	2
400	2
500	2
600	2
800	2.8
900	2.8
1000	2.8
1200	3.5

The couplers shall be corrugated band couplers or universal dimple couplers complete with angle flanges and bolted connectors. Couplers shall be 600mm wide for all pipe sizes. If corrugated couplers are used the pipe ends shall be recorrugated to accept the coupler.

4.1.4 Polyvinyl Chloride (PVC) Pipe. Polyvinyl Chloride (PVC) Pipe shall conform to CSA-B182.2, and B182.4; ASTM D 3034, F 679 and F 794 and F949; and UNI-B-5, B-6 and B-9 as appropriate. PVC pipe shall not be utilized for culvert installations.

4.1.5 High Density Polyethylene (HDPE) Pipe. High Density Polyethylene (HDPE) Pipe shall be double walled, with a smooth interior surface, conforming to CSA-B182.8. HDPE shall have a minimum stiffness of 320 Kpa. HDPE Pipe supplied for use as Driveway Culvert Pipe shall have an open-end area equivalent to or greater than the open end area for the corresponding diameter of corrugated steel pipe.

4.2 Catch Basins and Manholes. Precast sections shall be manufactured according to the requirements of CSA A257 covers shall be meet the requirements of ASTM A 48.

Manholes and catch basins are to be supplied at the diameter and height required to accommodate the intended pipe(s) and finished grade elevation supplied by the engineer. Catch basin assemblies to be used in roundabouts shall be designed for truck wheel loading as per the CAN/CSA-S6-Latest Edition.

The contractor shall supply the engineer shop drawings prior to fabrication for review drawings shall include location and elevation of each pipe in catch basin/manhole, rim elevation of cover, and all other pertinent information for its intended use.

An acceptable product for manhole frames and covers is the IMP R-10 or equivalent as per the R-10 Adjustable Manhole Frame and Cover Standard Drawing.

Openings for pipes should be precast and supplied with a gasket, installed according to the manufacture's specifications, field made openings shall be watertight and sealed with non-shrink grout approved by supplier and mixed according to manufactures specifications.

Adjustments shall be carried out using the following materials:

- Precast concrete grade rings, minimum depth of 75 mm.
- Cast in place concrete to conform to Division 5 Section 7 of these specifications.
- Grout to be "M-Bed Standard", Emaco S-88", or approved equivalent and shall be mixed to the Manufacturer's specification.

5.0 CONSTRUCTION METHODS

Culvert and storm sewer system materials shall not be ordered for delivery to the site until an approved list is obtained from the Engineer.

Only culvert and storm system materials which have been selected from an approved list shall be ordered for delivery to the site.

5.1 Storm Sewer

5.1.1 Excavation. All trenching material shall be piled in a manner that shall not endanger the work area or obstruct sidewalk and driveways or any other area of pedestrian or vehicular traffic. Street drainage and water courses shall be maintained during construction. Hydrants under pressure, valve chamber boxes, or other utility controls shall be kept unobstructed and accessible until the work is completed.

If, at any time during the excavation, it is not possible to place material in its proper location, it shall be stockpiled in approved areas for later use. No extra payment will be considered for the stockpiling or double handling of material.

Caution shall be exercised during excavation work so that the exact location of all buried pipes, services, cables or other underground structures, both known and unknown, may be determined. The Contractor shall be responsible for the repair of such structures when broken or otherwise damaged at their own expense. The Contractor shall also, at their own expense, and in a manner approved by the Engineer, sustain in their place and protect from injury any buried pipes, services, cables, other underground structures, sidewalks, curbs, roadways, buildings and other structures or property in the vicinity of this work. The Contractor shall not be entitled to any claim or extra compensation from, or on account of, the presence of the above or on account of any delay due to the removal, realignment or rearrangement of

the same.

Pumps of sufficient capacity shall be provided and kept in operation where necessary to keep the bottom of trenches dry and free from water until the pipe has been installed, inspected and backfilled as directed by the Engineer. Disposal of such water shall not be injurious to public health or private property and shall conform to the requirements of Division 1 Section 5.

5.1.2 Excavation Limits. All trench excavation shall follow the alignment and grade required and shall proceed in advance of pipe laying as directed by the Engineer. All work shall be carried out in open trenches with a clear bottom width of not less than 1.0 m or as otherwise directed by the Engineer. In no case shall the width of the top of the trench be less than that shown on Plan S-2009-144. The actual width shall be in accordance with the Occupational Health and Safety Act, Chapter 3, Part 9.

If, during excavation, the material changes from Common to Solid Rock, the Contractor shall excavate the overlying common material and notify the Engineer in order that measurements may be made. No allowance will be made for solid rock excavated before such measurements have been made.

Where the material at excavation grade is unstable, the unsuitable material shall be excavated, replaced with approved material. The material shall be compacted to 95% of Standard Proctor Density, or as directed by the Engineer. Additional excavation will be paid for as detailed in Division 2 Section 12 for actual material removed which payment shall be full compensation for backfilling and compaction of material to replace the unstable material.

If the excavation extends deeper than required, the excavation shall be refilled to the required grade with approved material and compacted to 95% of Standard Density, or as directed by the Engineer, all at the Contractor's expense.

If the excavation extends wider than the maximum limits, a deduction will be made for backfill material required outside these limits.

5.1.3 Sheathing and Shoring. All work done under this section shall be protected in accordance with the relevant requirements of the Occupational Health and Safety Act, Province of Nova Scotia. Where, due to soil conditions or to conform to the Occupational Health and Safety Act, the Contractor is required to use sheathing, shoring or bracing during the trench excavation, such shall be supplied, installed, maintained and removed all at the Contractor's expense. Except where otherwise directed by the Engineer, sheathing shall be withdrawn as backfilling proceeds.

5.1.4 Provision for Traffic and Pedestrians. During the construction of the storm sewer, warning signs, flares, delineators, barricades, etc., shall be placed and maintained at suitable intervals to protect persons from injury and to avoid property damage. These warning signs, flares, etc., shall be maintained until completion of the work.

5.1.5 Access to Adjacent Properties. Access to adjacent properties shall be maintained at all times during the construction period.

5.1.6 Laying of Pipe. Pipe for storm sewer shall be laid as shown on the contract drawings or as directed by the Engineer in accordance with these specifications.

Storm sewer pipe shall be laid to the alignment and grade set by the Engineer. Concrete pipe and polyvinyl chloride pipe shall be laid with the bells upgrade and spigot end fully entered into the adjacent bell. Where corrugated metal pipe or high density polyethylene pipe sections are to be connected, the ends shall be joined together with a coupling made of the same material and size as the pipe. Any pipe not meeting these requirements shall be removed and re-laid at the Contractor's expense.

Where two or more sections of High Density Polyethylene pipe are connected, the sections shall be joined with an integral or welded bell and wrapped with geotextile. Split couplers are not permitted.

At catch basins the pipe shall be cut so that pipe ends do not project more than 300 mm inside the walls of the catch basin.

5.1.7 Bedding. Storm sewer pipe shall be laid on the bedding prepared and shaped to conform with the exterior bottom of the pipe. Bedding shall be as directed by the Engineer and shall conform to the requirements for Class "B" Bedding as shown on Plan S-2009-051, Bedding Details for Laying Pipe.

Prior to placing of bedding accumulations of water and other objectionable materials shall be removed.

Bedding material shall be compacted to 95% of Standard Proctor Density or as directed by the Engineer.

5.1.8 Backfilling. The Contractor shall supply all labour and equipment necessary for the backfilling of all storm sewer structures and shall do all grading to reestablish excavated areas to the original ground or a specified grade.

Accumulations of water and all other objectionable material shall be removed prior to placing backfill. Granular material used as backfill material shall extend to a height of not less than 300 mm above the top of the pipe.

The backfill shall be carefully placed in layers not more than 200 mm thick, loose depth, and compacted to 95% of Standard Proctor Density, or as directed by the Engineer.

Backfill material placed around the pipe shall be maintained at equal levels on each side of the pipe at all times so that the intended alignment of the pipe is achieved.

The Contractor shall be responsible for any damages arising from improper backfilling procedures.

5.2 Culverts. All the various classes of pipe required for drainage structures shall be furnished and delivered to the project site by the Contractor. Pipe as designated for drainage structures shall be laid on bedding prepared and shaped to conform with the exterior bottom of the pipe. Bedding for pipe culverts shall be as directed by the Engineer and shall conform to the following requirements:

- Class "A" Bedding shall consist of placing the culvert pipe in concrete constructed in conformity with the details as shown on plan S-2009-051.Stripping of forms for concrete bedding and backfilling the culvert shall be completed at the Contractor's discretion with the approval of the Engineer. Concrete shall achieve adequate strength to support culvert and backfill.
- Class "B" Bedding shall consist of placing the culvert pipe in 100mm layer of crushed stone or gravel constructed as shown on plan S-2009-051.
- Class "C" Bedding shall consist of placing the culvert pipe in an earth foundation shaped and prepared as shown on plan S-2009-051.

Concrete pipe and polyvinyl chloride pipe shall be carefully laid with the bells upgrade, spigot-end fully entered into the adjacent bell and true to established lines and grades. Where two or more sections of concrete pipe are connected, rubber gaskets are required at joints.

Polyvinyl chloride pipe shall be supplied by a plant approved by CSA. If gaskets are supplied separately for polyvinyl chloride pipe, the gaskets shall be inserted in the groove at the bell end of the pipe and the spigot shall be lubricated. The spigot end shall be inserted and pushed up to but not beyond the depth of the stop reference mark. Recesses shall be excavated for any bells involved. Where corrugated metal pipe or high density polyethylene pipe sections are required to be connected, the ends shall be connected together with a band made of the same material as the pipe. All pipe shall be laid with a uniform slope in the direction of the flow. Any pipe which is not true in alignment, or which shows any settlement after laying, shall be removed and re-laid without extra compensation.

Backfill placed around pipe culverts shall be made with layers of Type 2 Gravel deposited on both sides of the culvert to the same elevation at the same time. All materials placed in this operation, over and around the pipe, shall be carefully placed and compacted relative to site conditions and in accordance with required compaction specifications.

5.2.1 Cleaning of Existing Culverts. Cleaning of existing culverts shall include all work necessary to clean culverts partially filled with sediment and excavation and re-grading of the ditch at the outlet end to ensure proper flow. Cleaning shall include removal of sediment, rocks, debris and any other objectionable material from the culvert and from inlet and or outlet ends and excavation of the ditch at the outlet as directed by the Engineer.

5.3 Catch Basins and Manholes. Concrete catch basins and manholes including grates and manholes including covers, shall be constructed where and as directed by the Engineer.

5.4 Removals/Adjustments/Repairs

5.4.1 Removal of Concrete and Metal Pipe, Catch Basins and Manholes. Existing Concrete and Metal Pipe, Catch Basins and Manholes shall be removed where and as directed by the Engineer and shall be disposed of or salvaged if possible and shall be re-laid or stored as directed by the Engineer.

5.4.2 Removal of Driveway Culverts. Existing steel, polyethylene and concrete driveway culverts shall be removed, salvaged and either installed or stored for future use where and as directed by the Engineer. Used culverts not designated for installation shall be removed and disposed of in a manner approved by the Engineer. No driveway culverts shall be removed without an approved list from the Engineer and only the Engineer will designate which culverts

are to be reused and which are to be disposed of.

5.4.3 Adjustment/Repair of Catch Basins and Manholes. The adjustment of existing catch basins and manholes shall include change in elevation of these structures regardless of size or type.

Prior to the adjustment of catch basins and manholes the existing frame and grate or cover shall be carefully removed and salvaged. Any undesirable material used in previous adjustments shall be removed to an elevation as directed by the Engineer.

The use of metal risers, wood, concrete or clay bricks and stone shall not be allowed. Supply and placement of cast-in-place concrete shall be in accordance with Division 5 Section 7. Grout shall be Rapid Set or Emaco S88 or approved equivalent and shall be mixed in accordance with the manufacturer's specifications.

Once the catch basin or manhole has been adjusted, the salvaged frame and grate or cover shall be set on the adjusted structure. Where new frames and covers are required they shall be supplied by the Contractor.

When asphalt concrete or Portland Cement concrete pavement is required to be removed to adjust a structure, the edges of such pavement shall be neatly cut to the satisfaction of the Engineer. All construction debris resulting from adjustment shall be removed from the construction site and disposed of in accordance with Department of the Environment Regulations.

5.4.4 Adjustment/Repair of Water Valves. Adjustment and repairs to water valves shall be carried out prior to asphalt concrete repaving. The Contractor shall be responsible for contacting the appropriate Municipality and coordinating arrangements prior to making the necessary adjustments and repairs to water valves. The adjustment and repairs of existing water valves shall include change of elevation of any of these units regardless of size or type. Water valves shall be adjusted by sliding the extension and sleeve to the correct elevation. If a water valve cannot be adjusted as required due to corrosion, breakage or misalignment, the water valve shall be set at the correct elevation by excavation of the valve sleeve and replacing the sleeve, extension and cover as required.

6.0 QUALITY CONTROL / QUALITY ASSURANCE

7.0 METHOD OF MEASUREMENT

7.1 Trench Measurement - Foundation Excavation Common. The quantity of Foundation Excavation Common shall be based on average end areas calculated at maximum 10 m intervals. For payment purposes the end area at each interval shall be the product of the theoretical trench width, as determined from Plan S-2009-144, and depth. Depth shall be determined by subtracting the theoretical bottom of excavation elevations (including bedding) from the original centerline elevations after grubbing is removed. When it is necessary to remove unsuitable material below the excavation grade, the depth at each interval shall be determined from field measurements.

7.2 Trench Measurement - Foundation Excavation Solid Rock. The quantity of Foundation Excavation Solid Rock shall be based on average end areas calculated at maximum 5 m intervals. For payment purposes the end area at each interval shall be the product of theoretical trench width, as determined from Plan S-2009-144, and the depth. The depth at each interval shall be determined by subtracting the theoretical bottom of excavation elevations (including bedding) from the original centerline elevations taken on top of the rock.

7.3 Limit of Excavation. The limit of trench excavation shall be the point at which the excavation hole for each catch basin or manhole meets the pipe trench (a horizontal distance measured from the centerline of each catch basin or manhole).

7.4 Pipe. The quantity paid for pipe shall be the length of pipe in place measured from inlet to outlet. The lengths of coupling devices shall not be added to the length of pipe.

7.5 Manholes, Catch Basins and Water Valves. The quantity paid for adjustment and or repair of manholes, catch basins and water valves will be by the each.

7.6 Cleaning of Existing Culverts. The quantity paid for cleaning of existing culverts will be by the each.

8.0 BASIS OF PAYMENT

8.1 Storm Sewer, Catch Basins and Manholes. Payment for laying storm sewer pipe will be at the contract unit bid price per lineal metre for Storm Sewer Pipe (of various specified diameters). Payment for installing catch basins and

manholes will be at the contract unit bid prices per each for Catch Basins and Manholes (both of various specified diameters). All prices shall include all material, backfilling and compaction of approved excavation or borrow material, disposal of any surplus or unsuitable material and including all plant, equipment, labour and incidentals necessary to complete the work to the satisfaction of the Engineer.

Granular backfill and/or bedding will be paid for in accordance with the tender bid item applicable to that material.

Material excavated per this item will be paid for as either Foundation Excavation Common or Foundation Excavation Solid Rock. Boulders measuring 0.25 m^3 or over, all rock in situ and masonry or concrete of old structures shall be classified as Foundation Excavation Solid Rock, and all other excavated materials shall be classified as Foundation Excavation Common.

8.2 Cross Culverts. Cross culvert installations shall be paid at the Contract unit bid price per linear metre of culvert installed and accepted in place. Cross culvert pipe shall be of Department approved materials, as per subsection 4.0 (all of various specified material and diameters). This price shall be full compensation for the supply of all culvert pipe, couplings, material, unloading, transportation charges, saw cutting and removal of existing asphalt concrete, removal and disposal of existing culvert(s), (if one or more exists), laying, preparation of bases, backfilling, compaction of all backfill materials, disposal of surplus or unsuitable materials, disposal of all existing culvert material, water control (unless noted otherwise in the Special Provisions), and also the furnishing of all equipment, tools, plant, labour and incidentals necessary to complete the work to the satisfaction of the Engineer. The Contractor is responsible for disposal of unsalvageable culvert material (which shall include metal, concrete, native timber, treated timber and creosoted materials) at a site approved for receiving and disposal of these materials.

Foundation excavation, non-reinforced concrete, crushed stone, and gravel shall be paid separately at the contract unit bid prices.

8.3 Driveway Culverts. Driveway culvert installations shall be paid at the Contract unit bid price per linear metre of culvert installed and accepted in place. Driveway culvert pipe shall be of Department approved materials, as per subsection 4.0 (all of various specified material and diameters). This price shall be full compensation for the supply of all culvert pipe, couplings, material, unloading, transportation charges, saw cutting and removal of existing asphalt concrete, removal and disposal of existing culvert(s), (if one or more exists), laying, preparation of bases, backfilling, compaction of all backfill materials, disposal of surplus or unsuitable materials, disposal of all existing culvert material, water control (unless noted otherwise in the Special Provisions), and also the furnishing of all equipment, tools, plant, labour and incidentals necessary to complete the work to the satisfaction of the Engineer. The Contractor is responsible for disposal of unsalvageable culvert material (which shall include metal, concrete, native timber, treated timber and creosoted materials) at a site approved for receiving and disposal of these materials.

Where the height of cover over the top of a driveway culvert is 2 metres or less, all excavation required to remove the culvert shall be included in the contract unit bid price for Driveway Culverts. For culverts with more than 2 metres of cover over the top of the pipe, foundation excavation will be paid at the unit bid price for foundation excavation.

Non-reinforced concrete, crushed stone, and gravel shall be paid separately at the contract unit bid prices.

8.4 Removals/Adjustments/Repairs/Cleaning

8.4.1 Removal of Driveway Culverts. Removal of driveway culverts will be paid for at the contract unit bid price per lineal metre of pipe removed for Removal of Driveway Culverts which shall be full compensation for the complete removal and disposal or storage of the pipe including all equipment, plant, labour, transportation costs, excavation (see below) and incidentals necessary to complete the work to the satisfaction of the Engineer.

Where the height of cover over the top of a culvert is 2 m or less, excavation required to remove the culvert shall be included in the contract unit bid price. For culverts with more than 2 m of cover, excavation will be paid for according to Division 2 Section 12 of these specifications.

If salvaged culverts are designated for reuse immediately, the work shall be carried out and payment made according to Subsections 5.2 and 8.2 respectively.

8.4.2 Removal of Concrete and Metal Pipe, Catch Basins and Manholes. Removal of existing concrete and metal pipe will be paid for at the contract unit bid price per lineal metre for Removal of Concrete Pipe and Removal of Metal Pipe. Removal of catch basins and manholes will be paid for at the contract unit bid price per each for Removal of Catch Basins and Manholes.

All prices shall be full compensation for the complete removal, including excavation quantities and all costs associated with the disposal or salvage of material, including all equipment, plant, labour, transportation and incidentals necessary to complete the work to the satisfaction of the Engineer.

8.4.3 Adjustment of Catch Basins and Manholes. Adjustment of catch basins and manholes will be paid for at the contract unit bid price per each for Adjustment of Catch Basins and Manholes which shall be full compensation for locating the structures, neatly saw cutting the asphalt concrete or Portland cement concrete pavement surface, any removal of asphalt concrete or Portland cement concrete pavement, foundation excavation, the supply and placing of all materials used in the adjustment, backfilling with suitable material including compaction, pavement reinstatement, disposal of all construction debris and surplus material and all equipment, plant, labour, tools and incidentals necessary to complete the work to the satisfaction of the Engineer.

8.5 Additional Excavation. Additional excavation will be paid for as detailed in Division 2 Section 12 for actual material removed which payment shall be full compensation for backfilling and compaction of material to replace the unstable material.

If the excavation extends wider than the maximum limits, a deduction will be made for backfill material required outside these limits.

8.6 Manholes, Catch Basins and Water Valves. Adjustment and or repair of manholes, catch basins and water valves will be paid for at the contract unit bid price per each.

All prices shall be full compensation for locating these structures, removal of asphalt concrete material, foundation excavation, supply and placement of all materials used in the adjustment and or repair, backfilling with suitable material, compaction, grout, reinstatement of pavement, new frames and or covers (where required) and all labour, tools, equipment, transportation and incidental necessary to complete the work described in this specification to the satisfaction of the Engineer.

8.7 Cleaning of Existing Culverts. Cleaning of existing culverts will be paid for at the contract unit bid price per each.

The unit bid price shall be full compensation for water control, cleaning, removal of sediment, rock, debris and other deleterious materials from the culvert, hauling and disposal of unusable material and all labour, tools, equipment and incidentals necessary to complete the work as specified in this specification to the satisfaction of the Engineer.

9.0 WARRANTY

SECTION 13 - CONCRETE RESTORATION - BRIDGE STRUCTURES

1.0 DESCRIPTION

This section describes repairs to structural concrete excluding prestressed/post tensioned concrete members. It includes but is not limited to bridge decks, abutment walls, pier shafts, backwalls, beam seats, curbs, gutters, parapets, end posts/intermediate posts, fascia, sidewalks and soffits.

2.0 REFERENCES

All reference standards shall be the current issue or latest revision at the first date of the tender advertisement. This specification refers to the following standards, specifications or publications:

- ACI 117, Tolerances for Concrete Construction and Materials
- ASTM A 775M, Specification for Epoxy Coated Reinforcing Steel Bars
- ASTM A 820, Specification for Steel Fibers for Fiber Reinforced Concrete
- ASTM C 309, Specification for Liquid Membrane Forming Compounds for Curing Concrete
- ASTM C 881, Specification for Epoxy Resin Base Bonding Systems for Concrete
- ASTM C 1018, Test Method for Flexural Toughness and First Crack Strength of Fiber Reinforced Concrete
- ASTM D 1751, Preformed Expansion Joint Filler for Concrete Paving and Structural Construction
- CSA A23.1, Concrete Materials and Methods of Concrete Construction
- CSA A23.2, Methods of Test for Concrete
- CSA S269.3, Concrete Formwork
- CSA G30.18, Billet Steel Bars for Concrete Reinforcement
- CSA W186, Welding of Reinforcing Bars in Reinforced Concrete Construction
- Division 4 Section 7, Asphalt Concrete Patching
- Division 4 Section 8, Asphalt Concrete Paving of Bridge Decks
- Division 5 Section 5, Reinforcing Steel
- Division 5 Section 7, Cast in Place Concrete
- Division 5 Section 9, Waterproofing Concrete Bridge Decks
- Environmental Construction Practice
- Occupational Health and Safety Act
- SSPC-SP6, Commercial Blast Cleaning
- SSPC-Vis 1-89, Visual Standard for Abrasive Blast Cleaning

3.0 SUBMISSIONS AND DESIGN REQUIREMENTS

For concrete restoration, submissions are governed by the respective referenced standards and the project Special Provisions.

All work conducted at height shall be done in accordance with the latest edition of the Fall Protection and Scaffolding Regulations pursuant to the Occupational Health and Safety Act. The design of scaffolding by a Professional Engineer, as defined and required by this legislation, shall be submitted at the start of construction.

All work shall conform to the conditions of approval stipulated by the regulatory authorities. Prior to the start of construction, an on-site meeting shall be held to discuss the specific construction format proposed by the Contractor. The meeting shall be attended by the Contractor, Engineer, a representative of the Department of the Environment and Labour, and a representative of the Department of Fisheries and Oceans, if required.

4.0 MATERIALS

4.1 Ready Mixed Concrete. All ready mixed concrete shall be provided in accordance with Division 5 Section 7.

Unless otherwise specified, the specified compressive strength of concrete for repairs shall be 35 MPa and proportioned in accordance with the requirements of Division 5 Section 7.

4.2 Reinforcing Steel. All reinforcing steel shall be in accordance with Division 5, Section 5. Epoxy coated reinforcing steel shall be used in repair areas where epoxy coated reinforcing steel is encountered. Epoxy coated reinforcing steel shall be Grade 400W and supplied in accordance with ASTM A 775M.

4.3 Fibres for Secondary Reinforcement of Concrete. Where indicated, steel fibres shall meet the requirements of ASTM A 820, Type 1, deformed, cold drawn steel wire, and of a minimum tensile strength of 1035 MPa.

Where indicated, polypropylene fibres shall be added to the concrete mixture at the Manufacturer's recommended dosage rate to prevent plastic shrinkage cracks.

The use of fibres in concrete will affect the plastic properties of the concrete and users may find it necessary to use additional admixtures such as superplasticizers to suit the site conditions. The size and dosage of the fibre shall be indicated in the Special Provisions.

4.4 Epoxy Coatings. Epoxy coatings for field application to plain (uncoated) reinforcing steel shall conform to ASTM C 881, Type IV, Grade 2, Class B and C.

5.0 CONSTRUCTION METHODS

5.1 Removal of the Existing Asphalt Surface

5.1.1. Bridge Approaches. All damaged pavement in the approaches of the bridge structure, or as otherwise directed by the Engineer, shall be removed. Additionally, the Engineer may direct, in writing, that the highway approaches on either end of the bridge structure be removed to a depth and a distance necessary to adjust for the change of grade, or to otherwise improve ride quality across the bridge. Other than the damaged pavement, only the asphalt concrete required to provide a smooth finished riding surface shall be removed from the approaches. The asphalt concrete shall be removed with a cold planer. The transverse junction between new and old asphalt shall be at an angle approximately 20° to the edge of the pavement. This transverse junction may be achieved by staggered and overlapping passes of the cold planer to create a stepped junction diagonally across the pavement.

5.1.2 Bridge Deck. The Contractor shall cut, remove and dispose of the existing asphalt concrete and waterproofing (if any) on the bridge deck. The removal of the pavement and waterproofing membrane from the Portland cement concrete deck shall be undertaken in such a manner as to prevent damaging the bridge deck. Any damage to the bridge deck caused by the removal of the existing asphaltic concrete shall be repaired in accordance with the Department's specifications at the Contractor's sole cost. All debris shall be removed completely from the site. Disposal of all debris shall be in accordance with environmental regulations, construction debris disposal by-laws, and in such a manner as to prevent any unsightly appearance from the highway.

5.2 Concrete Repair. Prior to concrete removal the quantities outlined by the Contractor shall be verified by the Engineer or their representative employing one or more of the following techniques:

- Visual observations
- Sounding or chain drags
- Half cell survey
- Radar techniques

Concrete shall be removed in such a manner as to prevent damage to adjacent concrete, other components and utilities that are to remain in place. Reinforcing steel, prestressing tendons, shear connectors, structural steel and other components that are to remain in place shall not be damaged or loosened. The Contractor shall ensure that hammers do not come in contact with reinforcing bars in a manner which will cause debonding of bars in adjacent concrete areas not being repaired.

Concrete removal shall not be permitted within 1 m of newly placed concrete for a period of 72 hours.

The Contractor shall prevent contamination, by oil or other deleterious substances, of the concrete surfaces.

The Contractor shall remove all loose and delaminated concrete, as directed by the Engineer. The initial fracturing of the concrete shall be conducted with breaking hammers. Concrete chipping and removal thereafter to the top of the reinforcing steel mat shall be conducted with jack hammers (14 kg maximum). Final determination of the extent of the damaged area shall be made as the work progresses by visual inspection, tapping with a hammer, or half cell. Where the corrosion potential of the reinforcing steel adjacent to the patch perimeter is more negative than -0.350 volts, additional concrete removals may be required by the Engineer. The Contractor shall schedule activities to provide for such surveys, and no claims for delay will be entertained as a result of failure to coordinate with Department forces.

Concrete debris shall be removed completely from the site. Disposal of all debris shall be in accordance with environmental regulations, construction debris disposal by-laws, and in such a manner as to prevent any unsightly appearance from the highway.

Prior to concrete removal the perimeter of the area to be removed shall be sawn (overhead repairs excluded) to a depth of 20 mm or to the depth of the reinforcing steel bar, whichever is less. If additional areas are found after concrete removal the perimeter shall be sawn as indicated above. Reinforcing steel shall not be cut.

The Contractor shall remove concrete to a minimum uniform depth of 20 mm behind the bottom layer of the top mat of reinforcing steel.

Jack hammers shall be used for the removal of concrete in front of and between the reinforcing bars. Only chipping hammers, maximum mass 7 kg, shall be used for the removal of concrete behind and within 25 mm of any reinforcing bars that are to remain and that are located within 100 mm of concrete to remain in place.

Concrete removal shall extend along the reinforcing steel to the point where it is free from significant rust. Concrete covering the reinforcing steel at the edge of the repair area will be sounded by the Engineer for local delamination before removal operations are completed.

Where the area of concrete removal with exposed reinforcing steel exceeds 2 m^2, the reinforcing steel shall be retied at every second intersection point and shall be supported to maintain the steel mat in its original location. Supports, shall be approved by the Engineer prior to use, placed as required and tied securely to the reinforcing steel.

5.3 Abrasive Blast Cleaning

5.3.1 Concrete Surfaces. Abrasive blast cleaning shall only be permitted when the concrete and steel are surface dry.

Areas and components not designated for abrasive blast cleaning and all epoxy coated reinforcing steel shall be protected from adjacent abrasive blast cleaning operations.

The abrasive blast cleaning shall be of such an extent to expose and clean the coarse aggregate and remove all dirt, laitance and hardened concrete slurry. Any oil or grease on the surface of the concrete shall be removed prior to blast cleaning.

The saw cuts at all patch perimeters shall be abrasive blast cleaned to remove all polished surfaces from the cutting operation.

All abrasive debris shall be removed from the patch area with compressed air or high pressure water blasting equipment.

Immediately after abrasive blast cleaning is completed, the Engineer will inspect the cleaned surface for fractured concrete, or loose aggregate. This material shall be removed using hand tools.

Any damage incurred to vehicles or their cargo or injury sustained to their occupants as a direct or indirect result of the Contractor's actions, procedures or negligence shall be the sole responsibility of the Contractor

5.3.2 Reinforcing Steel. The full circumference of the existing exposed reinforcing steel shall be cleaned to conform with SSPC-SP6, Commercial Blast Cleaning. Acceptance of the surface preparation will be based on the applicable SSPC surface preparation specification and visual standards given in SSPC-VIS 1.

The placement of the concrete shall be completed within 36 hours of the blast cleaning or the reinforcing steel shall be re-blasted.

Only if the original reinforcing steel in the element is protected with an epoxy coating, shall all reinforcing steel be required to be completely re-coated with two applications of epoxy or other approved insulating material immediately prior to the placing of the new concrete/mortar. The first coat of epoxy shall be applied prior to the wetting of the concrete surface. The second coat of epoxy shall be in a tacky condition when the new concrete/mortar is placed.

If the original reinforcing steel in the element is found to have suffered substantial corrosion resulting in loss of greater than ten percent of its nominal cross sectional area the Engineer may order the placement of new reinforcing bars or splice to existing bars.

Dowel holes shall be cleaned using a bristle brush sized to the hole diameter to loosen/remove tightly packed dust followed by compressed air blast or water flushing as recommended by the Manufacturer.

5.4 Concrete Reinstatement. The Contractor shall notify the Engineer 24 hours prior to the time intended to place the patching material. The work shall not proceed until the surface preparation has been inspected by the Engineer.

Hot and cold weather concrete placements shall be conducted in accordance with the respective clauses of Division 5 Section 7.

Patching operations shall be suspended during rain or other climatic conditions which, in the opinion of the Engineer, may adversely affect the quality of the work. Any portions of the concrete patch with incomplete consolidation or finishing shall be removed.

All dust and loose material shall be removed from the prepared surface of the repair area by oil free compressed air before the application of the bonding agent.

Prior to the placement of the concrete, the concrete surfaces to be patched shall be maintained in a wet condition for a period of not less than one hour. Excess water shall be removed from the surface, so as to achieve a saturated surface dry condition, using oil free compressed air immediately prior to application of the bonding agent.

Bonding agents shall be used wherever feasible for concrete patching. Bonding agents shall consist either of a cement/sand grout or a latex modified grout.

The sand/cement grout shall consist of a 1:1 sand/cement mixture mixed to a flowable consistency with a maximum water to cement ratio of 0.40.

For the latex modified grout, a latex bonding agent shall be added to the sand/cement grout described above. The proportions of cement, sand, latex, and mixing water shall be in accordance with the latex manufacturer's instructions. No free standing water shall be present in the patch area prior to application of the latex modified bonding agent.

The bonding agent shall be scrubbed into the patch area immediately ahead of the concrete placement. Pockets of excess grout shall be removed.

Concrete placement in the patch areas shall be conducted in accordance with Subsection 5.3 of Division 5 Section 7.

Immediately after placing concrete all surfaces shall be cured in accordance with Division 5 Section 7 of the Standard Specifications. Bridge deck repairs shall be cured using a layer of polyethylene placed immediately over wet burlap. The Contractor shall be responsible for ensuring that the burlap is kept wet at all times. Deck repairs shall remain covered for a minimum of *72* hours or until a compressive strength of 27 MPa is attained. The curing material shall then be removed and the concrete permitted to air dry for a minimum period of 48 hours prior to waterproofing.

5.5 Waterproofing Concrete Bridge Decks. All waterproofing membrane replacement shall be conducted in accordance with Division 5 Section 9 of these specifications. New waterproofing shall be compatible with existing waterproofing materials.

5.6 Asphalt Concrete Reinstatement. Asphalt concrete shall be replaced on the bridge deck in accordance with the requirements of Division 4 Section 8. Other affected areas shall be replaced in accordance with the requirements of Division 4 Section 7.

6.0 QUALITY CONTROL / QUALITY ASSURANCE

6.1 Quality Assurance. Concrete testing shall be conducted in accordance with Division 5 Section 7. The efforts of the Department's forces does not augment or replace the Contractor's responsibilities to adhere to the requirements of the specification.

Prior to waterproofing application and after the curing period, all concrete patch areas shall be sounded to detect the presence of any delaminations in the patch concrete. At the Engineer's discretion, further testing may be directed in potentially delaminated areas. Testing may include concrete coring and bond tests in accordance with CSA A23.2-6B.

A set of three (3) regular compressive strength cylinders shall be made for every 50 m^3 of concrete placed, or fraction thereof, or as directed by the Engineer. In addition, for every regular set of three (3) cylinders, two (2) additional cylinders will be cast as described. If the placement consists of one load, the two (2) additional cylinders shall be cast in addition to the three (3) regular cylinders. In all other cases, additional cylinders shall be cast from another load and not cast with the regular set. Additional cylinders will be tested only if requested by the Engineer for appeal purposes.

The compressive strength result of a sub-lot, as defined in Section 6.3, will be the average of the two 28 day cylinders made from all regular sets cast for the sub-lot, rounded to one decimal place.

All cylinders shall be secured in an approved storage medium, provided by the Consultant, prior to leaving the site.

6.2 Strength Criteria. The Department reserves the right to reject any concrete which does not meet all the requirements for the class of concrete specified. The Department also reserves the right to reject any portion of a placement if there exists evidence that this portion has a strength that is below the minimum acceptable required under this section. The Department may, at the discretion of the Engineer, accept concrete which does not meet the specified strength requirements provided that the structural integrity of the section is not jeopardized.

Concrete shall be tested in accordance with CSA A23.1. If three or more sets of cylinders are cast during one placement, the strength of each class of concrete shall be considered satisfactory if the average of all regular sets, 28 day strength tests, equals or exceeds the specified strength. If less than three strength tests are performed, acceptance shall be based on the average of the test results conducted on the section.

If the concrete fails to meet the specified strength by more than 5 MPa, the Department may order replacement or reinforcing, at the Contractor's expense, of the sections in the structure. Alternatively, at the Department's discretion, concrete of a specific class which is otherwise acceptable, but fails to meet the specified strength by less than 5 MPa, may be accepted as described under Basis of Payment.

Where required, determination of structural adequacy is independent of, and in addition to, the payment reduction described below. Where design calculation is required, the Contractor shall reimburse the Department for all costs incurred up to a maximum of $2000.00.

Coring will not be permitted in instances where a negative price adjustment applies for under strength concrete. Coring of the concrete to verify strength will be permitted only for concrete which is to be replaced or reinforced. When coring is permitted, cores shall be taken at locations directed by the Department.

6.3 Lots and Sub-lots. A lot shall consist of all concrete of one nominal minimum 28-day strength. If the quantity of concrete of one specified strength is greater than 5000 m^3, the Department will consider proposals to divide the concrete into two lots, based on placement in separate structures or in different construction seasons.

Each lot will be divided into sub-lots from 2 m^3 to a maximum of 500 m^3. Concrete of the same strength placed in one pour or concrete of the same strength placed on the same day shall be considered a sub-lot. A minimum of one set of acceptance cylinders will be made from each section placed (sub-lot).

6.4 Strength Requirements. The Department will calculate the mean strength of all the acceptance tests in each sub-lot with a volume of 2 m^3 or more. The concrete in each sub-lot will be accepted at the contract price or prices, provided the mean strength is equal to or greater than the specified nominal minimum 28 day strength. When the average strength is more than 5 MPa below the nominal specified 28 day strength, the Department may require the Contractor to replace the concrete without a negative price adjustment or may accept the concrete with the maximum negative price adjustment applied. When the average strength is not more than 5 MPa below the nominal specified 28 day strength, the Department may accept the sub-lot with a negative price adjustment applied. When the average strength is not more than 5 MPa above the specified nominal 28 day strength, the Department will apply a positive price adjustment to the sub-lot. The price adjustment will be as described in Basis of Payment.

6.4.1 Appeal Testing. The Contractor shall not be permitted to appeal any test result when the sub-lot meets or exceeds the required strength. The Contractor shall be responsible to obtain the 28 day compressive strength results

from the Engineer and the Contractor may appeal the test results for any rejected or penalized sub-lot. In the event of an appeal, the Contractor shall serve notice of appeal to the Engineer, in writing, within 5 business days after completion of the 28 day testing.

If the Contractor appeals the regular test results, the additional cylinders cast will be tested to verify the compressive strength of the sub-lot. Payment will be based on the strength obtained during the appeal testing. If the strength is lower or higher than the initial 28 day results, the appeal test results shall govern and be used in the pay adjustment calculation.

The Contractor may have a representative present during appeal testing. During the period of the testing, the Contractor's representative shall comment on anything concerning the testing which they do not consider to be valid and the Engineer shall respond to all comments in order to resolve them.

Prior to leaving the testing laboratory any unresolved comments regarding the testing procedures are to be given to the Engineer in writing.

The strength obtained from the appeal testing shall be binding on both the Contractor and the Department.

6.4.2 Appeal Testing Costs. If the appealed test results indicate that a penalty no longer applies, the testing costs incurred shall be borne by the Department. The Contractor shall be responsible for any other costs that the Contractor may incur.

If the appealed test results confirm a negative price adjustment or rejection, the sampling and testing costs, and any other costs that may be incurred as a result of the appeal, shall be borne by the Contractor.

7.0 METHOD OF MEASUREMENT

7.1 Asphalt Concrete Removal. Asphalt concrete removal at bridge approaches, as described in Subsection 5.1.1 shall be measured by the square metre and based on the original lines and dimensions.

Asphalt concrete removal on bridge decks, as described in Subsection 5.1.2, shall be measured as one unit (each) and based on the original lines and dimensions.

7.2 Area of Concrete Repair. Measurements shall be made by the square metre of repaired concrete area based on the original lines and dimensions of the structure. Areas where the removal of deteriorated concrete exceeds 150 mm in depth shall be measured separately. When concrete removal exceeds 150 mm at intersecting surfaces only one of the surfaces shall be measured for payment beyond the 150 mm.

7.2.1 Types of Concrete Repair

7.2.1.1 Bridge Deck Repair. Bridge deck repair shall be defined as repairs to any concrete surface between the outer edges of the curb, sidewalk, parapet structures on the bridge deck, approach slabs, approach curbs, approach sidewalks, and approach parapets. Materials and labour required to maintain the gap at expansion joints shall be included and not measured separately.

7.2.1.2 Through Deck Repair. Through deck repair shall be defined as repairs to any concrete surface on the bridge deck that extends for the full depth of the concrete. Through repair will apply only to repairs undertaken from the topside.

7.2.1.3 Bridge Soffit Repair. Bridge soffit repair shall be defined as repairs to any concrete surface on the underside and outside face of the bridge deck. Bridge soffit repair includes the vertical faces on the outer edge of the Bridge Deck and approaches including curb, sidewalk and parapet.

7.2.1.4 Sub Structure Repair. Bridge structure repair shall be defined as repairs to any concrete surface not included as Bridge Deck Repair, Through Deck Repair or Bridge Soffit Repair. This would include, but is not limited to, bridge abutments, wingwalls, piers, footings, backwalls.

7.3 End Posts / Intermediate Posts. End posts/intermediate posts, indicated for replacement, shall be detailed in the Special Provisions and measured as each. The unit price shall be all inclusive to conduct the work described in the Special Provisions.

7.4 Reinforcing Steel. Reinforcing steel, where indicated or as directed by the Engineer, shall be measured per kilogram installed. No measurement shall be made for welding of reinforcing steel or mechanical splices or couplings.

8.0 BASIS OF PAYMENT

8.1 Asphalt Concrete Removal.
Removal of asphalt concrete from the bridge approaches will be paid at the contract unit price per square metre, which shall be full compensation for removal and disposal of the old asphalt concrete. Removal of the existing asphalt wearing surface and waterproofing on the bridge deck will be paid at the contract lump sum price and shall be full compensation for removal and disposal of all material. The Contractor shall supply all equipment, plant, labour and tools necessary for the cutting, planing, removal, loading and disposal necessary to complete the work.

8.2 Concrete Restoration (General) Payment for Concrete Restoration will be made at the contract unit price bid per linear/square metre, or price adjusted as described below. Payment adjustment will be applied up to a maximum of 5 MPa below or above the specified strength. Payment shall be considered full compensation for the cost of furnishing all materials, aggregates, cement, supplementary cementing materials, water, admixtures, and other materials, non-metallic expansion joint materials, tools, equipment, falsework, forms, bracing, labour, curing, surface finish, damp-proofing and all other items of expense required to complete the concrete work as shown on the plans, and as outlined in the specifications.

8.2.1 Bridge Deck Repair, Bridge Soffit Repair, Sub Structure Repair. Bridge deck, soffit, and sub structure repair shall be paid based on the contract unit price per square metre of repaired surface area. The repair area will be adjusted based on the depth of the concrete repair. For repair areas with a depth of up to 150 mm, the repair area will not be adjusted. For repair areas with a depth that exceed 150 mm, the area of concrete repair shall be increased by fifty percent (50%).

For repair areas with a depth exceeding 150 mm, the payment adjustment shall be an additional 50 % of the unit bid price for each additional 150 mm of depth. The Contractor shall receive the Engineer's approval prior to commencing work on all repairs with a depth greater than 150 mm. No repair area shall be paid for more than once.

Example #1:
Depth of repair = 150 mm
Unit bid price = $\$100.00/m^2$
Payment to Contractor = $\$100.00/m^2$

Example #2:
Depth of repair = 250 mm
Unit bid price = $\$100.00/m^2$
Payment to Contractor for first 150 mm of depth = $\$100.00/m^2$
Payment to Contractor for depth from 150 mm to 250 mm = 50% x $\$100.00/m^2$ = $\$50.00/m^2$
Total Payment to Contractor = \$100.00 + \$50.00 = $\$150.00/m^2$

Example #3:
Depth of repair = 350 mm
Unit bid price = $\$100.00/m^2$
Payment to Contractor for first 150 mm of depth = $\$100.00/m^2$
Payment to Contractor for depth from 150 mm to 300 mm = 50% x $\$100.00/m^2$ = $\$50.00/m^2$
Payment to Contractor for depth from 300 to 350 mm = 50% x $\$100.00/m^2$ = $\$50.00/m^2$
Total Payment to Contractor = \$100.00 + \$50.00 + \$50.00 = $\$200.00/m^2$

8.2.2 Through Deck Repair. Through deck repairs shall be paid based on the contract unit price per square meter of repaired surface area. There will be no adjustment of the repair area based on the depth of the through deck repair. No repair area will be paid for more than once.

8.3 End Posts/Intermediate Posts. End posts/intermediate posts will be paid as each and the unit price shall be all inclusive to conduct the repair as detailed in the Special Provisions.

8.4 Reinforcing Steel. Reinforcing steel, will be paid on the basis of per kilogram of reinforcing steel installed. No payment will be made for welding of reinforcing steel or mechanical splices or couplings.

8.5 Price Adjustment. Price adjustments will be applied to the calculated quantity (cubic metres) of concrete incorporated into the work and accepted by the Engineer. The total adjustment added to or subtracted from payments due to the Contractor shall be the algebraic sum of all price adjustments calculated for all the sub-lots in excess of 2 m^3. A price adjustment shall not apply if the sub-lot is less than 2 m^3.

8.5.1 Negative Price Adjustment. Concrete which fails to meet the required 28 day compressive strength, by 5 MPa or less and is proven to be structurally adequate, may be accepted at an adjusted price. The penalty adjustment will be calculated based on the following formula:

NPA = V x ($10 (SS-TS))

where

NPA = Negative Price Adjustment ($/$m^3$)
V = Volume placed (m^3)
SS = Specified strength,(MPa)
TS = Tested strength (MPa)

The negative price adjustment shall not exceed $50/$m^3$.

8.5.2. Positive Price Adjustment. When the sub-lot exceeds the specified strength the Department will pay a positive price adjustment up to 5 MPa above the specified strength. The positive price adjustment will be calculated based on the following formula;

PPA = V x ($2 (TS-SS))

where

PPA = Positive Price Adjustment ($/$m^3$)
V = Volume placed (m^3)
SS = Specified strength, (Mpa)
TS = Tested strength, (MPa)
A positive price adjustment will not be applied if the sub-lot fails to meet the specified strength.

The positive price adjustment shall not exceed $10/$m^3$.

9.0 WARRANTY

SECTION 14 - INEXTENSIBLE MECHANICALLY STABILIZED EARTH (MSE) STRUCTURES - (WS)

1.0 DESCRIPTION

The mechanically stabilized earth (MSE) structure shall consist of a non-structural leveling pad, reinforced concrete face panels, and inextensible soil reinforcement elements mechanically connected to each facing panel. Soil reinforcement shall have sufficient strength, frictional resistance and length as required by the design, and as outlined in these specifications.

2.0 REFERENCES

All reference standards shall be current issue or latest revision at the first date of tender advertisement. This specification refers to the following standards, specification or publications:

- AASHTO Standard Specifications for Highways shall be Sixteenth Edition - 1996 and not the latest revision
- ASHTO M 111, Zinc (Hot-dip galvanized) Coating on Iron and Steel Products
- ASTM A36/A36M, Standard Specification for Carbon Structural Steel
- ASTM A82, Standard Specification for Steel Wire, Plain for Concrete Reinforcement
- ASTM A123, Standard Specification for Zinc (hot-Dip Galvanized) Coatings on Iron and Steel Products
- ASTM A185, Standard Specification for Steel Welded Fabric, Plain, for Concrete Reinforcement
- ASTM B-663-94, Standard Specification for Silver - Tungsten Carbide Electrical Contact Material
- ASTM A572/A572M, Standard Specification for High-Strength Low-Alloy Columbium - Vanadium Structural Steel
- ASTM D2240, Standard Test Method for Rubber Property - Durometer Hardness
- ASTM D3080, Test Method for Direct Shear Test of Soils Under Consolidated Drained Conditions
- ASTM D4355, Test Method for Deterioration of Geotextiles from Exposure to Ultraviolet Light and Water
- ASTM D4491, Test Methods for Water Permeability of Geotextiles by Permittivity
- ASTM D4632, Test Method for Grab Breaking Load and Elongation of Geotextiles
- CAN/CSA-S6-06, Design of Highway Bridges
- CSA-A5, Portland Cement
- CSA-A23.1, Concrete Materials and Methods of Concrete Construction
- CSA-A23.2, Methods of Test for Concrete
- CSA-A23.4, Pre-Cast Concrete Materials and Construction
- CSA-G30.12, Bullet - Steel Bars for Concrete Reinforcement
- CSA-G30.16, Weldable Low Alloy Steel Deformed Bars for Concrete Reinforcement
- CSA-G40.21-M87/M92, Structural Quality Steels
- CSA-G164, Hot Dip Galvanizing of Irregularly Shaped Articles
- Division 1 Section 3, Agreement
- Division 1 Section 5, General Provisions
- Division 2 Section 13, Foundation Excavation for Bridges
- Division 3 Section 10, Fill Against Structure
- Division 5 Section 7, Cast In Place Concrete
- FHWA Publication NO. FHWA-DP.82-1 “Mechanically Stabilized Earth Walls and Reinforced Soil Slopes Design and Construction Guidelines”

3.0 SUBMISSIONS AND DESIGN REQUIREMENTS

It shall be the responsibility of the Design Engineer to provide the following information on the tender plans:

- Plan layout of MSE wall.
- Profiles.
- Developed MSE wall elevations (elevations of top and bottom of wall to be identified) and lengths of MSE walls.
- MSE wall cross-sections showing the supported structures, beam seat configuration, required finished grades, location and slope of surcharge on top of the MSE wall structure.
- Design Parameters:
    - Design Codes
    - Traffic Surcharge (kPa)
    - The magnitude and location of all loads to be carried by MSE Structure
    - Seismic Acceleration Coefficient value (a/g)

- Backfill parameters: (Default design values)
    - Internal angle of Friction for the MSE volume material (minimum 34 degrees), Backfill behind the reinforced soil zone (30 degrees)
    - Foundation Material under MSE Volume (30 degrees)
    - Unit Mass (t/m^3) for the MSE volume (19 t/m^3)
    - Backfill behind the reinforced soil zone (19 t/m^3)
- The Allowable Bearing Capacity of the foundation soil under the MSE Volume.
- The total and differential settlement.
- All information on the stability of the foundation soils if slope stability is a concern.

Note: The service life for the MSE structure shall be 100 years.

3.1 General. The bidder shall bid one of the approved MSE structures listed in Special Provisions and shall indicate the proposed MSE structure in the bid proposal. The system bid shall be the system built. No substitutions will be allowed. All MSE structures shall be built in accordance with the approved plans and panel shop drawings.

All appurtenances behind, in front of, under, mounted upon or passing through the MSE structure such as drainage structures, utilities, piles, footings, or other appurtenances shown on the plans shall be accounted for in the design of the MSE structure and detailed on the MSE structure supplier's drawings.

The MSE structure shall follow the general dimensions of the MSE structure envelope shown on the tender plans. The shop drawings will locate the leveling pad at or below the theoretical leveling pad elevation. The top of the face panels shall be at or above the top of the wall elevation shown on the tender plans.

For MSE Structures with plan curve radii of less than 60 metres, joint details showing panel overhang shall be submitted for the curved wall sections to the Department for review and approval.

3.2 Fabrication. The Contractor shall provide design calculations and shop drawings to the Manager of Highway & Bridge Design for review and approval within 2 weeks after the tender award. The Manufacturer of the MSE structure shall not proceed with fabrication until the final approval of the shop drawings. The drawings shall show soil reinforcement type and length; applied bearing pressures; facing panel lay-out; and representative typical details for each section of MSE structure.

3.3 Testing. It shall be the Contractor's responsibility to do the required testing and provide to the Manufacturer prior to the design of the MSE structure exact values of unit mass and angles of friction for the Fill Against Structures and the Backfill behind the reinforced soil zone. A copy of this report shall be forwarded to the Design Engineer and to the Department.

The Contractor shall furnish the Department with a Certificate of Compliance certifying that the MSE volume material meets all requirements specified by the Department. Electro - Chemical requirements and gradation requirements are to be as per Division 3, Section 10, Subsection 4.1, 4.2 and Subsection 4.6 MSE Volume Material. Aggregate tests shall be conducted by a testing laboratory approved by the Department. All test results shall accompany the Certificate of Compliance and shall be current and relevant. The Department reserves the right to carry out any additional testing as required at the Department's expense except if such testing reveals work that does not conform with the plans or specifications. In this instance the cost of the testing and the remedial work shall be at the Contractor's expense.

4.0 MATERIALS

4.1 General. Concrete shall conform to the provision of Division 5 Section 7 of the Specifications except as varied herein. The Contractor shall make their own arrangements with the MSE structure supplier to purchase the necessary premanufactured components required for the MSE structure.

4.2 Concrete Face Panels and Corner Elements. Concrete shall have a minimum compressive strength of 35 MPa at 28 days, and shall have a maximum nominal coarse aggregate size of 20 mm, the aggregates used the face panels shall be non-reactive as determined by CSA-A23.2. The maximum water to cementing materials ratio shall be 0.40. The limits for slump and total air content shall be 80 mm ± 20 mm and 6% ± 1% respectively. The minimum cementitious content shall be 320 kg. per cubic metre of concrete. Any additives including retarding agents or accelerating agents containing chlorides shall not be used.

4.3 Panel Reinforcing Steel. Reinforcing steel shall have a minimum yield strength of 400 MPa and conform to CSA G30.12. Reinforcing cages shall be fabricated with the use of steel wire ties. Tack welding of reinforcement into rigid cages requires the use of CSA-G30.16 weldable grade reinforcement, and shall be in accordance with CSA-A23.4,

Subsection 4.2.

4.4 MSE Structure Components

4.4.1 Inextensible Strip Type Soil Reinforcing Systems

4.4.1.1 Reinforcing Strips. Reinforcing Strips shall consist of hot-rolled, shop fabricated ribbed structural steel conforming to CSA-G40.21 Grade 400W or better or ASTM A 572 grade 65 as shown on the Shop drawings. Galvanizing shall follow shop fabrication and shall be in accordance with CSA-G164 or ASTM A 123. Strips shall be cut to length as shown on the Shop Drawings plus or minus 500 mm.

4.4.1.2 Tie Strips. Tie strips shall consist of shop fabricated structural steel conforming to ASTM A 36 or CSA-G40.21 Grade 300W and shall be galvanized in accordance with CSA-G164 after fabrication. Bolt hole alignment, dimensions, and end distances shall be within the tolerances shown on the shop drawings.

4.4.1.3 Fasteners. ASTM A 325 bolts and nuts shall be nominal size 12.7 mm diameter hot dip galvanized.

4.4.1.4 Rubber Bearings Pads. Panels, except for the bottom coarse, shall be supported on rubber bearing pads. The rubber shall be an elastomer with a Shore Hardness of 85mm ± 5mm, as measured in accordance with ASTM D 2240.

4.4.1.5 Filter Fabric. The filter fabric shall meet the following requirements:

A non-woven geotextile with a nominal width of 500 mm shall be placed over the inside of all joints between precast panels. These strips of geotextile shall have a minimum overlap of 100 mm at any lap locations. The material shall have the following minimum average roll values:

- Grab Tensile Strength 530 N
- Mullen Burst 1655 kPa
- Permeability 0.22cm/sec
- UV Resistance 70%

These requirements for the filter fabric shall be as per ASTM D 4632, ASTM D 3786, ASTM D 4491 or ASTM D 4355 as required.

4.4.1.6 Structural Connectors. Structural plate connectors and fasteners used for yokes to connect reinforcements to wall panels around pile or utility conflicts, shall conform to the CSA Structural grades of steel and galvanizing as listed in item 4.4.1.1. Under no circumstances shall field cutting of soil reinforcement be allowed to avoid conflicts in the MSE Volume.

4.4.2 Inextensible Mesh Soil Reinforcing Systems

4.4.2.1 Reinforcing Mesh. Reinforcing mesh shall be shop fabricated of cold drawn steel wire conforming to the minimum requirements of ASTM A 82 and shall be welded into the finished mesh fabric in accordance with ASTM A 185. Bars shall be the same diameter in both directions. Galvanization shall be applied after the mesh is fabricated and shall conform to the minimum requirements of ASTM A 123.

4.4.2.2 Connection Devices. Connection Devices shall be fabricated of cold drawn steel wire conforming to the minimum requirements of ASTM A 82. Connection devices shall be welded in accordance with ASTM A 185 and galvanized in accordance with the minimum requirements of ASTM A 123.

4.4.2.3 Connector Bars. Connector Bars shall be fabricated from cold drawn steel wire conforming to ASTM A 82. Galvanization shall conform to the minimum requirements of ASTM A 123.

4.4.2.4 Joint Material. Joint Material shall be a resilient, non-extruding material; uniformly saturated with asphalt, offering a minimum 70% recovery after compression. Joint material shall conform to ASTM D 1751.

4.4.2.5 Weep Hole Covers. The weep hole covers shall have a geonet core with a minimum thickness of 6 mm. The polyethylene components shall have a minimum specific gravity of 0.93 cm^3 in accordance with ASTM D 792 and a minimum carbon black stabilization of 2% in accordance with ASTM D 4218. The geonet core shall be covered on both sides by a geotextile material. The minimum size shall be 250 mm x 250 mm.

4.4.2.6 Structural Connectors. Structural plate connectors and fastener assembles used to connect reinforcing mesh

to wall panels around pile or utility conflicts shall conform to CAN/CSA-G40.21 M92 Grade 300W. Galvanization shall be applied after fabrication and shall conform to the minimum requirements of ASTM A 123.

4.5 Coping Elements. Where coping elements are required, they shall be cast-in-place and as shown on the Shop Drawings and in accordance with the requirements of Division 5, Section 7 for Concrete Face Panels and Corner Elements.

4.6 MSE Volume Material. The internal angle of friction for the select backfill used in the reinforced fill zone for the internal stability design of the MSE Structure shall not be less than 34 degrees as determined by the Standard Direct Shear Test according to ASTM D 3080. The gradation limits for Fill Against Structure shall be as detailed in Division 3, Section 10 Subsection 4.2 of the Standard Specification.

ELECTRO-CHEMICAL PARAMETER	DRY STRUCTURES (above water)	FRESH WATER STRUCTURES (below water)
Chlorides ($C1^-$)	< 100 ppm	< 100 ppm
Sulphates (SO_4^-)	< 500 ppm	< 500 ppm
Resistivity	> 1000 ohm-cm	> 3000 ohm-cm
pH	5 - 10	5 - 10

4.7 Drainage. For MSE Structures supporting roadways which are chemically deiced in the winter, an impervious membrane shall be placed below the pavement and just above the first row of reinforcement to intercept any flows containing deicing materials. The membrane shall be sloped to drain away from the facing to an intercepting longitudinal drain outletted beyond the reinforced zone.

5.0 CONSTRUCTION METHODS

Details of heavy equipment such as cranes or off-road trucks to be used during construction or for which the structure is to serve as temporary support, shall be reviewed by the MSE structure designer prior to construction.

After approval of the shop drawings the Contractor shall provide the Department with 24 hours notice of the intent to fabricate the panels.

The MSE structures shall be constructed in conformity with the lines, grades, details and dimensions shown on the drawings or as established by the Department. The Contractor shall make use of the guidance services provided by the supplier and provide 48 hours notice to the supplier and the Department of the intended date for start of erection.

5.1 Foundation Excavation. Excavation for the MSE structure shall be in accordance with the requirements of Division 2, Section 13 and in close conformity to the lines and grades shown on the Drawings.

5.2 Foundation Preparation. The foundation for the MSE structure shall be graded level for a width equal to the length of reinforcing strips plus approximately 500 mm or as shown on the shop drawings. Prior to wall construction, the foundation shall be proof rolled and/or compacted to the satisfaction of the Engineer. Any foundation soils found to be unsuitable shall be removed and replaced with a material as approved by the Engineer.

5.3 Leveling Pad. Concrete for the non-reinforced concrete leveling pad shall have a minimum 28 day compressive strength of 30 MPa and shall be screeded uniformly smooth with a variation of not more than 5 mm in 3 m. Elevation differences between steps shall not vary more than 5 mm from those shown on the shop drawings. The leveling pad shall be cured in accordance with CSA-A23.1 or as directed by the Engineer.

5.4 MSE Structure Erection. MSE Structure erection shall be carried out in accordance with the MSE suppliers recommendations. The Contractor shall provide the Department with a written copy of the MSE supplier's construction manual and any other site specific requirements.

5.4.1 Panel Erection Tolerances. The overall vertical tolerance and horizontal alignment tolerance of the MSE structure shall not exceed 20 mm per 3000 mm of wall. The maximum offset between adjacent panel faces shall be in accordance with the following table:

WALL RADIUS (m)	ALLOWABLE PANEL OVERHANG (mm)
4 (Straight Wall)	10
4 to 150	15
149 to 100	18
99 to 50	25

The fabrication tolerance for alignment of the loop wires and bolt holes of the connection insert shall not exceed 1 mm.

5.4.2 MSE Volume Material Placement. MSE Volume Material placement shall closely follow the erection of each row of panels.

The maximum MSE Volume Material lift thickness shall not exceed 250 mm (compacted). Backfill compaction shall be accomplished without disturbance or distortion of reinforcing strips and panels. MSE Volume Material compaction requirements shall be as per Division 3 Section 10 unless otherwise specified by the Engineer. For bridge abutments, particular attention shall be given to compactive effort beneath the bridge seat as outlined on the shop drawings.

Prior to installation of the bridge superstructure the MSE Volume Material placement shall be completed to a level of not less than 900 mm above the foundation level of the bridge seat unless otherwise indicated on the drawings or directed by the Engineer.

The Contractor shall not allow surface runoff from adjacent areas to enter the MSE Structure construction site.

5.4.3 Reinforcement Placement. All reinforcement placement shall be as per the appropriate construction manual for the approved MSE Structure.

5.4.4 Traffic Barrier or Coping Placement. The cast-in-place traffic barrier or coping, if required on top of the concrete face panels, shall have construction/expansion joints positioned as shown on the shop drawings and shall be cast in accordance with Division 5 Section 7. Mixture design requirements shall conform to Sub-Section 4.2 of this Specification.

5.4.5 Drainage Pipe Installation. Perforated drainage pipe shall be installed within the MSE volume behind all MSE Structures. Perforated drainage pipe wrapped in filter fabric shall be installed to the lines and grades shown on the drawings and in accordance with the General Specifications or as directed by Engineer.
5.5 Curing. Concrete shall be cured for seven days at a minimum temperature of 10°C and the time necessary to achieve 70 percent of the specified compressive strength of the concrete.

6.0 QUALITY CONTROL / QUALITY ASSURANCE

The Contractor shall submit to the Department a detailed Quality Control procedure for panel fabrication. This procedure is subject to Departmental approval prior to fabrication.

Upon approval of the Quality Control procedure the Department reserves the right to carry out Quality Assurance Testing as required.

7.0 METHOD OF MEASUREMENT

The preparation of all shop drawings, erection drawings, erection procedures, calculations, etc., shall not be measured for payment but shall be considered as incidental to the work. The supply of any additional materials for the MSE Structure not shown on the drawings, but deemed necessary for the erection shall not be measured for payment but shall be considered as incidental to the work.

The entire MSE Structure on a project excluding the MSE volume material and the foundation excavation shall be measured for payment as one unit for supply and erection.

The MSE volume material shall be measured in accordance with Division 3, Section 10.

Foundation Excavation shall be measured in accordance with Division 2, Section 13.

8.0 BASIS OF PAYMENT

MSE Structures will be paid for at the contract lump sum bid price for Mechanically Stabilized Earth Structures which price shall include all design services, labour, equipment and materials required for the supply and fabrication, loading, delivery and erection of the complete MSE Structure, clearing and grubbing required under the footprint of the foundation walls and MSE walls, cast -in-place concrete coping and all other incidentals required to complete the job to the satisfaction of the Engineer. All work is to be done in accordance with the plans and the specifications.

The MSE Volume Material shall be paid for in accordance with Division 3, Section 10.

Foundation Excavation shall be paid for in accordance with Division 2, Section 13.

The cost of additional inspection and testing made necessary by the Contractor's work not meeting these specifications shall be the responsibility of the Contractor.

The Contractor may be granted partial progress payments as determined by the Engineer for this item on the basis of committed materials delivered to the Fabricator's shop and for fabrication satisfactorily completed.

The Engineer's decision as to the value of the work completed for partial progress payments shall be final. Upon payment, the material (before and after fabrication) for which payment has been made shall become the property of the Department with the Contractor assuming full responsibility for safe storage and transport to the construction site.

9.0 WARRANTY

Upon completion of the MSE Structure and visual acceptance of the work in accordance with these specifications, a one year maintenance period shall begin. During this period any failure in MSE Structure including, but not limited to, the deficiency of concrete panels and associated components; excess of tolerance on horizontal/vertical alignments; etc. shall be repaired or reconstructed at the Contractor's expense to the satisfaction of the Engineer. Costs associated with labour, materials, transportation, traffic control and any other work required for repair or reconstruction of unacceptable areas shall be paid by the Contractor.

9.1 Final Acceptance. The Department or its representative, and the Contractor will meet and inspect the MSE structure one year after the completion of the work. All areas that have failed shall be repaired at the Contractor's expense at no cost to the Department. If the Contractor and the Department do not agree on what areas are failed, the Department's decision shall be final.

The final acceptance of the original MSE structure by the Department shall relieve the Contractor from all maintenance responsibility with respect to the original MSE structure however, the Contractor shall be held responsible to maintain repaired areas for a period of 12 months after repairs are made.

9.2 Liability. During the period of construction and the one year maintenance period the Contractor shall be responsible for processing any and all claims for property damage and/or bodily injury caused by the failure of the MSE structure including, but not limited to, motor vehicles or pedestrians. The Contractor shall be responsible for the payment of all property damage and bodily injury claims and agrees to save and hold harmless the Department from all such claims as set out in Division 1 Section 4 Subsection 24 of these Specifications. Claims not handled by the Contractor or their representative efficiently or expediently will be settled by the Department and the costs recovered from the Contractor.

9.3 Warranty Holdback. Notwithstanding anything to the contrary, as stated in Division 1 Section 3 Subsection 6 of the Standard Specification, the warranty holdback for the MSE Wall will be held and retained by the Minister until the maintenance period has expired. The warranty holdback will be held to ensure that sufficient funds will be available to the Department in the event of non-performance of the MSE Structure. The Contractor is responsible for all costs including the materials and haul and for the repair of all failures and damages resulting from negligence or faulty workmanship by the Contractor that adversely affects the integrity of the MSE structure which occurs, and is evident prior to, the expiration of the one year maintenance period. The amount of warranty holdback shall be as specified in the Special Provisions.

SECTION 15 - ASPHALTIC PLUG JOINTS

1.0 DESCRIPTION

This section details the supply and installation of asphaltic plug joints in the deck from curb to curb and pre-moulded, pre-cut rubber seals and/or polysulfide rubber caulking compound sealant in sidewalk joints from curb to edge of deck.

2.0 REFERENCES

All reference standards shall be current issue or latest revision at the first day of tender advertisement. This specification refers to the following standards, specifications or publications:

- ASTM D36, Test Method for Softening Point of Bitumen (Ring-in-Ball Apparatus)
- ASTM D113, Test Methods for Ductility of Bituminous Materials
- ASTM D3407, Test Methods for Joint Sealants, Hot-Poured, for Concrete and Asphalt pavements
- ASTM D5329, Test Methods for Sealants and Fillers, Hot-Applied for Joints and Cracks, Asphaltic and Portland Cement Concrete Pavements

3.0 SUBMISSIONS AND DESIGN REQUIREMENTS

The Contractor shall submit for review three sets of shop drawings for the proposed joint assembly. These shop drawings shall be submitted at least two weeks prior to the start of the project, and shall be specific to the structure identified. All shop drawings shall be approved by the Engineer.

4.0 MATERIALS

All materials utilized shall be as per the manufacturers specifications and are to meet with the approval of the Engineer. The following tests shall be conducted on the binder as per the appropriate standard:

- Softening Point
- Tensile Adhesion
- Ductility
- Penetration
- Flow
- Resiliency
- Asphalt Compatibility

The aggregate shall meet all manufacturer’s requirements with respect to type of stone and gradation requirements.

5.0 CONSTRUCTION PROCEDURES

5.1 Removal of Old Joint Seals. The existing expansion joint seal assemblies shall be completely removed, including but not limited to steel armoring, steel plates, rubber glands, seals, asphalt concrete, and raised concrete dams. All existing joint seals shall be removed to deck level. Steel re-bar shall be cut off below the level of the deck. Concrete removal incidental to the replacement of redundant existing joint assemblies as well as any delaminated/deteriorated concrete shall be replaced with approved concrete to provide a level surface for the new joint seal. Joint nosings shall be rebuilt to existing openings or as specified by the Engineer. All concrete reinstatement and payment for concrete reinstatement shall be in accordance with Division 5 Section 13 - Concrete Restoration.

5.2 Asphaltic Plug Joints. Upon completion of the asphalt pavement, the Contractor shall install one of the following asphalt plug joints or approved equivalent in strict accordance with the manufacturer’s recommendations:

- Matrix 502
- Firbre-Joint (Visco-Elastic Expansion Joint)
- WABO Expandex
- THORMA Joint System
- Permajoint Bitumen Expansion Joint System

A manufacturer’s representative shall be present during the installation of the joint seal unit and provide the Department, upon completion of the work, with a written report prior to the payment for this item.

5.3 Sidewalk Joint Sealant. Expansion joints over curbs and sidewalks shall be sealed with pre-moulded, pre-cut rubber seals and/or two-part polysulfide rubberized caulking to the satisfaction of the Engineer. Sealant shall be installed 5 mm below flush with the curb and sidewalks. Expansion joint sealant shall not be installed until concrete deck repairs have been completed adjacent to the joint area. Sealant shall be installed in accordance with the manufacturer's recommendations. A manufacturer's technical representative shall be present during the installation of the joint seal and provide the Department with a written report. The Contractor shall ensure that the area where the rubber sealant abuts the asphaltic plug joint is watertight.

6.0 QUALITY CONTROL / QUALITY ASSURANCE

The Contractor shall provide the services of a technical representative of the joint seal manufacturer during the installation of manufactured assemblies. A written report summarizing the representative's comments and observations shall be provided by the Contractor before final payment is issued. This report shall also describe any deficiencies which may affect the function and warranty of the installed work.

7.0 METHOD OF MEASUREMENT

Completed joint assemblies shall be measured on the unit basis and shall include the curb face and sidewalk surfaces of the given structure. The asphaltic plug joints shall have a maximum width of 600 mm. Minimum asphaltic plug joint width shall be in accordance with the manufacturer's written specifications, and as approved by the Engineer. Measurement shall be based on a maximum depth of 100 mm. If the average depth of the joint exceeds 100 mm and approved by the Engineer, then the quantity for payment purposes shall be increased by the following formula:
(average depth -100 mm)/100 mm x 0.70

8.0 BASIS OF PAYMENT

Payment for this item shall be made at the tendered unit price per completed joint assembly. This price shall include but not be limited to the following: removal and disposal of the old joint seal assembly; supply of the new joint seal assembly; supply and installation of aggregate and binder; rubber sealant; all equipment; materials; labour and incidentals required to complete the work to the satisfaction of the Engineer.

9.0 WARRANTY

The Contractor shall warrant complete expansion joint systems applied under the terms of the Contract for a period of 36 months, following the date the work is accepted by the Department, to be free of all defects in materials and workmanship. Any defects found in these systems shall be repaired or replaced by the Contractor to the satisfaction of the Department at no cost to the Department.

SECTION 16 - SHOTCRETE - WET AND DRY PROCESS

1.0 DESCRIPTION

This section describes the required materials and procedures for restoration of concrete structures with either wet or dry process shotcrete.

2.0 REFERENCES

All reference standards shall be the current issue or latest revision at the first date of the tender advertisement. This specification refers to the following standards, specifications or publications:

- ACI 506, Specifications for Shotcrete, ACI Manual of Concrete Practice, Part 5
- ACI 506, Guide to Certification of Shotcrete Nozzleman, ACI Manual of Concrete Practice, Part 5
- ASTM C260, Specification for Air Entraining Admixtures for Concrete
- ASTM C387, Standard Specification for Packaged, Dry, Combined Materials for Mortar and Concrete
- ASTM C642, Standard Test Method for Specific Gravity, Absorption and Voids in Hardened Concrete
- ASTM C1116, Standard Specification for Fibre Reinforced Concrete and Shotcrete
- ASTM C1140, Standard Practice for Preparing and Testing Specimens from Shotcrete Test Panels
- ASTM C1202, Electrical Indication of Concrete's Ability to Resist Chloride Ion Penetration
- CSA A5, Portland Cement
- CSA A23.1, Concrete Materials and Methods of Concrete Construction
- CSA A23.2, Methods of Test for Concrete
- CSA A30.5, Welded Steel Wire Fabric for Concrete Reinforcement
- CSA A362, Blended Hydraulic Cement
- CSA W186, Welding of Reinforcing Bars in Reinforced Concrete Construction
- Recommended Practice for Shotcrete Repair of Highway Bridges, Canadian Strategic Highways Research Program, Ottawa, 1992
- Steel Structure Protective Coating SSPC-SP6, Commercial Blast Cleaning
- TPW, Fall Protection and Scaffolding Regulations
- TPW, Occupational Health and Safety Act
- Division 5, Section 5, Reinforcing Steel
- Division 5, Section 7, Cast in Place Concrete

3.0 SUBMISSIONS AND DESIGN REQUIREMENTS

3.1 Nozzleman. The nozzleman shall be ACI certified and the Contractor shall provide, at least two weeks prior to the start of the work, the name of the nozzleman and proof of certification. If the nozzleman is not ACI certified they shall have at least four years experience in the application of shotcrete and shall successfully complete the pre-construction trial indicated within this specification.

3.2 Shotcrete Mixture Design. The Contractor shall provide the proposed shotcrete mixture design for review by the Department at least two weeks in advance of starting the work. In the case of wet process shotcrete, the submittal shall indicate the proposed method of mixing the shotcrete. If the wet process mixture will be supplied from a ready mixed concrete plant, the proposed plant shall be pre-qualified as described in Division 5, Section 7. The submittal shall include a list of all proposed shotcrete equipment including brand name, model, and capacity of shotcrete gun, pre-dampener (except for dry-mix), and air compressor. The method of alignment control shall be detailed.

The mixture design submittal shall also include appropriate data to show conformance of the proposed materials to the specifications, including Portland cement, aggregates, supplementary cementing materials, admixtures, reinforcement and mix water. The design submittal shall show all batch quantities of fine and coarse aggregates (based on saturated surface dry aggregates), supplementary cementing materials, total water demand and all other shotcrete ingredients.

4.0 MATERIALS

4.1 Design Materials. Portland cement and supplementary cementing materials shall be stored so as to be protected from exposure to moisture and temperatures below 5°C and above 30°C. Portland cement shall conform to the requirements of CSA A5-M for Type 10, and to CSA A362-M for Type 10SF. Supplementary cementing materials shall conform to CSA A23.5-M for Class F fly ash and Type U for silica fume.

Aggregates shall be normal density and conform to the limits of deleterious substances as described in Division 5, Section 7 of the Standard Specification.

Both coarse and fine aggregates shall be tested for detection of alkali aggregate reactivity (AAR). If any aggregate contributes to AAR, the mixture shall be adjusted according to the recommendations of CSA A23.2 - 27A.

All water shall be potable.

Combined aggregate gradations shall conform to the gradations provided in Table 1 and as specified in the Special Provisions.

For 10 mm nominal maximum size aggregate, the 10 to 2.5 mm coarse aggregate fraction shall be stockpiled and added separately from the fine aggregate (nominal 5 mm maximum size) during mixing. The gradation of the 10 to 2.5 mm coarse aggregate shall conform to the gradation requirements of Table 2, CSA A23.1.

Aggregates used in site batching of shotcrete shall be stockpiled and handled so as to prevent segregation. The fine aggregate shall be maintained in a three to seven percent moisture content range. Shelters or tarpaulins shall be used to protect the aggregate stockpiles during periods of wet weather.

Wet process shotcrete shall be air entrained with an air entraining admixture meeting the requirements of ASTM C260. No other admixtures shall be used without authorization by the Engineer.

Table 1 - Combined Gradation Limits for 10 mm and 5 mm Shotcrete Aggregates

Sieve Size (mm)	Total Percent Passing Each Sieve (by Mass)	
Nom. Max. Size Aggregate	5 mm	10 mm
14	100	100
10	100	90 - 100
5	95 - 100	70 - 85
2.5	80 - 100	50 - 75
1.25	50 - 90	35 - 55
0.630	25 - 65	20 - 35
0.315	10 - 35	8 - 20
0.160	2 - 10	2 - 10

4.2 Steel Reinforcement. Reinforcing steel shall be new and installed as per the Special Provisions. Reinforcing steel shall conform to Division 5, Section 6.

Welded wire mesh fabric shall be of the dimensions and mass specified in the Special Provisions and conform to CSA G30.5-M.

4.3 Anchors. Anchors for attachment of welded wire mesh fabric to the existing concrete substrate shall be specifically designed for shotcrete purposes. The insert length and size shall be sufficient to resist a 10 kN pull out force.

4.4 Fibres. Steel/polypropylene fibres, where specified in the Special Provisions, shall conform to the requirements of ASTM C1116.

5.0 CONSTRUCTION METHODS

5.1 Concrete Substrate Preparation. Concrete substrate preparation shall be accomplished in accordance with the

requirements of Division 5, Section 13, Concrete Restoration.

5.2 Reinforcement. All corroded reinforcing steel shall be abrasive blast cleaned to conform with SSPC-SP 6 (commercial blast). Reinforcing steel displaying deep pitting or loss of more than 20 percent of cross-sectional area, shall be removed and replaced at the direction of the Engineer. In cases of localized pitting, the existing reinforcing steel need not be cut, but shall be reinforced by the addition of appropriately placed reinforcing steel of suitable length.

The minimum splice length of all replacement and new reinforcing steel shall be 20 bar diameters. Lapped bars should be spaced apart at least three times the diameter of the largest bar at the splice. Reinforcing steel shall be placed according to ACI 506R, Sections 5.4 and 5.5.

Intersecting reinforcing steel shall be tied with 1.6 mm or heavier gauge tie wire, and adequately supported to minimize vibration during shotcreting. Alternatively, reinforcing steel splices may be replaced with welded splices providing all reinforcing steel is weldable. Welding shall conform to CSA W186 and shall be conducted by a CWB certified welder.

Welded wire mesh fabric shall be placed as described in the Special Provisions. Welded wire fabric shall be supplied in sheets; rolled fabric shall not be permitted. Sheets of adjoining mesh shall be overlapped by at least one and one half squares at all intersections, in both directions, and securely fastened.

Mesh shall be securely fastened to each pre-set anchor. When reinforcing steel exists, mesh shall be fastened to the reinforcement on a grid not exceeding 600 mm square, using 1.6 mm or heavier gauge tie wire. Large knots of tie wire which could result in sand pockets and voids during shotcreting shall be avoided.

The minimum clearance between the reinforcing steel or mesh and the existing concrete substrate shall be 20 mm.

As an alternative to welded wire mesh fabric, steel fibre reinforced shotcrete shall be used where specified in the Special Provisions. Fibre reinforced shotcrete shall only be used in conjunction with an appropriate anchor and tie-back system as detailed in the Special Provisions.

5.3 Anchors. Anchors shall be of the type specified in the contract documents and shall be either mechanically set or grouted, as specified.

Anchors shall be positioned at the spacing detailed in the contract documents. Maximum anchor spacing shall be 600 mm on a grid pattern over the entire repair area except around the perimeter where the maximum anchor spacing shall not exceed 300 mm.

Anchors shall be randomly tested at a frequency specified by the Engineer to verify pull-out force. Anchors failing to meet the minimum acceptable pull-out force shall be removed and replaced.

5.4 Alignment Control and Cover. Alignment control shall be implemented to establish control over line and grade and ensure that the minimum specified shotcrete thickness and cover to reinforcing steel are maintained.

Alignment control shall be accomplished by means of shooting wires, guide strips, depth gauges or forms.

When shooting wires or ground wires are used, they shall consist of 0.8 mm diameter high strength steel (piano wire) combined with a turnbuckle and spring coil which maintains the wire under tension during shooting. All wires shall be removed after completion of shotcreting and screeding operations.

Guide strips and forms shall be of such dimensions and installation configuration that they do not impede the ability of the nozzleman to produce uniform, dense, properly consolidated shotcrete. Forms or guides which are conducive to creating sand pockets and voids shall not be used.

When depth gauges are used for alignment control, they shall be installed at a spacing not exceeding 1200 mm on a grid pattern. Metal depth gauges shall be cut back to 10 mm below the finished surface to prevent corrosion staining on the surface.

Cover to reinforcing steel shall not be less than 40 mm.

5.5 Application - Wet and Dry Processes. All areas prepared for shotcrete repair shall be reviewed by the Engineer prior to the application of shotcrete.

Shotcrete shall be applied in accordance with good practice as detailed in ACI 506R. The requirements of 506R shall apply, except that in the case of silica fume shotcrete it will usually be possible to apply the full thickness of shotcrete in one pass, without the need of multiple layer construction. Wherever possible, shotcrete shall be applied to the full thickness in a single layer.

At least one hour prior to application of shotcrete, all surfaces to receive shotcrete shall be flushed with water of drinking quality. Wetted surfaces shall be in the saturated surface dry condition prior to application of shotcrete. If necessary, a blow pipe shall be used to facilitate removal of excess surface water. Only oil free compressed air shall be used in the blow pipe. For very porous or dry substrate concretes, the concrete shall be saturated the day prior to shotcreting and then re-wetted prior to shooting as above.

The minimum number of layers required to build up the full thickness of shotcrete without sagging, separation, or sloughing shall be used.

When using multiple layer shotcrete construction, the first layer shall be prepared before application of a subsequent layer by either:

- Brooming the stiffening layer with a stiff bristle broom to remove all loose material, rebound, over spray, prior to shotcrete attaining initial set; or
- If the shotcrete has set, surface preparation shall be delayed 24 hours, at which time the surface shall be prepared by sandblasting or high pressure water blasting (minimum 4000 psi, 28 MPa), to remove all loose material, rebound, hardened over spray glaze, or other material detrimental to good bond.

When successive layers of shotcrete are required to build up the full shotcrete thickness, the first layer shall be prevented from drying out by fogging or wetting. The use of curing compounds shall not be permitted unless approved by the Engineer. If curing compounds are used, it shall be removed by abrasive blast cleaning or high-pressure water blasting, prior to application of the next layer of shotcrete. The first layer of shotcrete shall be free of surface water and in a saturated surface dry condition at the time of application of the next shotcrete layer.

Adjacent surfaces shall be protected from rebound and over spray. Rebound and over spray shall not be permitted in the completed work. Rebound and over spray shall be removed from surfaces to receive shotcrete while still in a plastic state with blow pipes scrapers, wire brushes or other suitable tools. Hardened rebound or over spray shall be removed prior to application of additional shotcrete using abrasive blast cleaning, chipping hammers, high pressure water blasting or other suitable techniques.

Suitable scaffolding or other devices, all meeting the Nova Scotia Department of Environment and Labour requirements, shall be provided to give the nozzleman and workers free unhindered access to the work area.

Sufficient lighting and ventilation shall be provided to allow the nozzleman and workers a clear unhindered view of the work area. Work shall stop if, in the opinion of the Engineer, visibility is unsuitable for the application of quality shotcrete.

Shotcreting shall follow good shooting practices as detailed in ACI 506. In particular:

- The nozzle shall be oriented at right angles to the receiving surface, except as is required to fill corners, cove edges, and encase large diameter reinforcing steel;
- The combination of air pressure, shotcrete consistency, and distance from the nozzle to the surface shall be optimized to achieve the maximum consolidation of the shotcrete;
- Care shall be taken while encasing reinforcing steel and mesh to keep the front face of the reinforcement clean during shooting operations. Shotcrete must be built up from behind the reinforcement to prevent voids and sand pockets from forming;
- Accumulations of rebound and over spray shall be continuously removed by the nozzleman's helper in advance of the deposition of new shotcrete.

Shotcrete shall not be applied during periods of rain or high wind which could interfere with the shotcrete stream, unless suitable protective covers, enclosures or wind breaks are installed. Shotcrete shall be applied to the required line and grade and tolerance detailed in the Special Provisions, using shooting wires, depth gauges, guide strips, forms or other suitable devices. Shotcrete shall be applied to provide minimum cover to reinforcing steel detailed in the Special Provisions.

5.6 Shotcrete - Dry Process

5.6.1 General. Dry mix shotcrete shall be batched, mixed, and supplied by one of the following methods:

- Dry bagged premix material supplied in either small (30 or 40 kg typical) or large synthetic cloth bulk bin bags (1000 kg typical).
- Site batching, using either volume or mass batching subject to review by the Engineer of the proposed batching equipment.

The use of central or transit mix batched or transit mix supplied dry mix shotcrete, shall not be permitted, unless the Contractor can satisfactorily demonstrate conformance to all the project performance requirements.

All dry mix shotcrete shall be shot within 60 minutes of the time of moisture coming into contact with the cementitious materials. When using volume batching, proportions shall be verified at the frequency specified using a mass batching check.

Dry bagged, premixed shotcrete shall be produced in conformance to the pertinent requirements of ASTM C387. All aggregates shall be dried to a moisture content of less than 0.1 percent by mass, based on oven drying at 105 to 110°C. Dry bagged premixed shotcrete shall be maintained in a temperature range of 5 to 30°C during storage and application. Frozen material shall not be used.

Dry mixed shotcrete shall be protected from moisture during handling, transport and storage. Any bags which display lumps of pre-hydrated shotcrete shall not be used.

5.6.2 Placing. Shotcrete batching, mixing and supply equipment shall be capable of combining the dry mix shotcrete materials into a uniform mixture and discharging it without segregation.

Dry bagged premixed shotcrete shall be pre-dampened to provide a consistent moisture content in the range of three to five percent by mass in a pre-dampener, prior to discharge into the shotcrete gun. Discharge of completely dry materials into the shotcrete gun shall not be permitted.

The delivery equipment (gun) shall be capable of discharging a continuous smooth stream of uniformly mixed material into the delivery hose at the proper velocity to the discharge nozzle.

The discharge nozzle shall be equipped with a manually operated water injection system (water ring) for directing an even distribution of water through the mixture. The water valve shall be capable of ready adjustment to vary the quantity of water and shall be convenient to the nozzleman.

The water pressure at the discharge nozzle shall be sufficiently greater than the operating air pressure so the water is intimately mixed with the pre-dampened shotcrete materials. If the line pressure is inadequate, a water booster pump shall be introduced into the water line to provide a steady non-pulsating water pressure. Water heaters shall be provided during cold weather if required to produce shotcrete at a suitable temperature.

The water ring shall be monitored for any signs of blockage of individual water spray holes. If non-uniform wetting of discharged shotcrete becomes apparent, shooting shall be stopped, and the water ring cleaned or other appropriate actions taken.

The delivery equipment shall be thoroughly cleaned at the end of each shift. In particular, any build up of coatings in the delivery hose and nozzle liner shall be removed. The water ring and nozzle shall be regularly inspected and replaced as required.

5.7 Shotcrete - Wet Process

5.7.1 General. Wet mix shotcrete shall be batched, mixed and supplied using one of the following methods:

- Central mix with transit delivery;
- Transit mixing and delivery;
- Volumetric batching, mobile mixer unit;
- Dry bagged premix materials with water added on site.

In central or transit mixing, aggregate, cement, silica fume, and/or fly ash, shall be mass batched and delivered

according to CSA A23.1. Water and chemical admixtures shall be volumetrically batched. Materials shall be added in any sequence which produces uniform mixing and dispersion, except that all water reducing admixtures and superplasticizers shall be in the mixer at the time of addition of the silica fume, if used.

Transit mixers shall be free of excessive accumulations of hardened shotcrete or concrete in the drum or on the blades. Blades shall be free of excessive wear. Transit mixers shall be charged not more than 70 percent of their rated mixing capacity. All shotcrete shall be placed within 90 minutes after addition of mix water to the batch. Shotcrete loads shall be of such batch size that this requirement is met.

Dry bagged premix supply with a water addition at the site shall be permitted, provided the Contractor can demonstrate uniform mixing of the shotcrete and satisfy all the project performance requirements.

5.7.2 Placing. Wet mix shotcrete shall be applied by one of the following methods:

- Thick stream method, using a regular concrete pump with air addition at the discharge nozzle to pneumatically apply the shotcrete on the surface. Typical delivery hose is 50 or 63.5 mm in diameter.
- Thin stream method, using a pressurized chamber to pneumatically convey the shotcrete down the delivery hose to the surface. Typical delivery hose is 40 mm maximum internal diameter.

The thin stream method shall only be used if the Contractor can demonstrate in pre-construction testing that the equipment is capable of properly consolidating shotcrete, fully encasing reinforcing steel and producing a material which meets the project performance requirements.

The shotcrete delivery equipment shall conform to the requirements of ACI 506 and shall be capable of delivering a steady stream of uniformly mixed material to the discharge nozzle at the proper velocity and rate of discharge.

Pneumatic feed guns, rotary type fed guns and peristaltic squeeze type pumps shall only be used if the Contractor can demonstrate that they produce shotcrete meeting all the performance requirements in this document.

The air ring at the nozzle shall be monitored for any signs of blockage of individual air holes. If non-uniform discharge of shotcrete becomes apparent, shooting shall be stopped, and the air ring cleaned or other appropriate actions taken.

5.8 Finishing, Curing and Protection - Wet and Dry Process

5.8.1 Finishing. Shotcrete shall be left in the natural gun finish unless finishing is specified in the Special Provisions.

Where finishing is required, shotcrete shall be cut back to the line and grade using cutting rods, screeds or other suitable devices. The shotcrete shall be allowed to stiffen sufficiently before cutting or trimming, so as to prevent the formation of tears, cracks or delaminations. Shooting wires shall be removed on completion of cutting and trimming.

One or more of the following finishes shall be applied, as specified in the Special Provisions:

- Wood float finish; either as a preliminary finish for other surface treatments, or as a granular texture finish;
- Rubber float finish; applied to either a flash coat or wood float finish, to produce a finer textured granular finish;
- Brush finish; a fine hairbrush float finish; leaving a finely textured, sandy finish;
- Steel trowel finish; leaving a dense, smooth, hard finish.

All shotcrete and over spray shall be trimmed back from adjacent non-prepared concrete surfaces. The edges of all shotcrete repairs shall have a minimum square saw cut edge 20 mm deep and shotcrete shall be finished up to this edge. Feather edging of shotcrete (including flash coats) shall be prohibited.

5.8.2 Hot and Cold Weather Protection. The general requirements of Division 5, Section 7, Cast in Place Concrete, for hot and cold weather protection shall also apply to shotcrete.

If the prevailing ambient conditions (relative humidity, wind speed, air temperature and direct exposure to sunlight) are such that the shotcrete develops plastic shrinkage and/or early drying shrinkage cracking, shotcrete application shall be terminated. The Contractor shall:

- Reschedule the work to a time when more favourable ambient conditions prevail; and/or
- Adopt corrective measures, such as the installation of sun screens, wind breaks or fogging devices, to protect the work.

Shotcrete application shall not proceed if the rate of evaporation at the repair surface exceeds 1.0 kg/m^2/hour as determined in Appendix D of CSA A23.1

Shotcrete application shall be terminated if the ambient temperature rises above 27°C, unless the Contractor adopts special hot weather shotcreting procedures which are approved by the Engineer.

During periods of cold weather, shotcreting may only proceed if the concrete substrate to which the shotcrete is applied is above 5°C and the air temperature in contact with the repair surfaces is above 10°C.

The air temperature in contact with the repaired surfaces shall be maintained at 10°C or greater for at least four (4) days after application of shotcrete. The means of maintaining the air temperature shall be approved by the Engineer. The use of unvented heaters, which gives rise to carbonation, shall be prohibited.

The temperature of shotcrete, at time of application, shall be between 5 and 30°C.

5.8.3 Curing. Once shotcrete has attained final set, it shall be kept continuously moist for a minimum period of four (4) days, unless the Engineer permits a shorter curing period or the use of a curing compound. Moist curing shall be accomplished using one or more of the following procedures:

- Wrapping the elements in wet burlap, which has been pre-soaked in water for 24 hours prior to installation;
- Installation of sprinklers, soaker hoses, or other devices which keep the shotcrete repairs continuously wet.

When shotcrete is left as a natural gun finish, curing compounds shall be applied at twice the application rate normally specified for smooth concrete finishes. Curing compounds shall be removed prior to application of subsequent paints, coatings or additional layers of shotcrete.

The use of intermittent wetting procedures which allow the shotcrete to undergo cycles of wetting and drying during the curing period shall be prohibited.

6.0 QUALITY CONTROL / QUALITY ASSURANCE

6.1 General. The Department will review the Contractor's proposed materials, supply, equipment and crew. Only nozzlemen approved in writing by the Engineer shall be used on the project. The Engineer will examine all areas prepared for shotcreting, including the installation of anchors, reinforcement and devices to control line and grade, prior to application of any shotcrete.

The Department will provide inspectors to monitor the shotcrete installation. The inspectors will notify the Engineer of any conditions which may give rise to rejection of the plastic shotcrete. The inspectors will regularly perform testing on the shotcrete in the plastic and hardened state for in place acceptance or rejection.

6.2 Pre-construction Trial. If the nozzleman is not ACI certified, the Contractor shall implement a pre-construction trial to enable the Engineer to evaluate the conformance of the proposed materials, shotcrete mixture, equipment and crew to the project specifications.

The trial shall be used to pre-qualify the nozzlemen proposed for use on the site. Nozzlemen who have not pre-qualified shall not be permitted to apply shotcrete on the project.

Nozzleman shall shoot pre-construction test panels. The test panels shall be produced, by the Contractor, in accordance with the requirements of ASTM C1140 and have minimum dimensions of 400 x 400 mm x 125 mm deep. Test panels shall be made from wood and sealed plywood and have 45 degree sloped edge forms to permit rebound to escape. One of the test panels shall contain reinforcement and anchors representative of the same size and spacing required in the work. The second test panel shall contain no reinforcement (except for fibres where specified) to allow for extraction of shotcrete specimens for compliance testing.

One test panel shall be shot using each proposed mixture proportion, at each anticipated shooting orientation, by all nozzleman proposed for use on the project.

Test panels shall be field cured for a minimum of 24 hours in the wooden forms in the same manner as the proposed shotcrete work. Test panels shall be transported in their wooden forms, by the testing company providing inspection services, taking care not to crack or damage the shotcrete.

The test panels will be moist cured until an age of three days where upon the shotcrete will be removed from the form and placed back into moist curing until the specified test age.

Test specimens will be extracted at each test age from the non-reinforced shotcrete for the performance parameters discussed in Table 2. A minimum of three 100 mm diameter cores shall be extracted from the reinforced shotcrete panel at locations of intersecting reinforcing steel and mesh, to check the adequacy of the shotcrete around the reinforcement. At least one core will be taken at an anchor.

Table 2 - Shotcrete Performance Requirements

Description	Age Days	Specified Requirement	
		Dry Process	Wet Process
Maximum Water Binder Ratio	----	0.4	0.4
* Plastic Air Content (%)	----	----	Min 4
** Slump at discharge,(mm)	----	----	60 ± 20
Minimum Compressive Strength, (MPa)	7	30	30
	28	35	35
Max. Rapid Chloride Permeability (Coulombs)	28	<1000 Shotcrete with Silica Fume	
	28	<2000 Shotcrete Plain	
Boiled Absorption, max. %	28	8	8
Volume of Permeable Voids, max. %	28	17	17

* The plastic air content test shall be performed in accordance with CSA Test Method A23.2-4C with the following deviations: The shotcrete shall be shot from the nozzle directly into the air meter vessel to slightly overfill the vessel. The air meter bucket shall then be rapped smartly 10 to 15 times and struck off. The test shall then be completed in accordance with the test method.

** The shotcrete mixture shall be sampled for the slump test from the point of discharge of the delivery truck.

The Engineer shall evaluate the quality of the extracted cores and the test panel. If a panel is rejected, the nozzleman has an opportunity to perform a second trial panel. If the second panel is also rejected, the nozzleman shall not be permitted to shoot on the project until they have completed an appropriate training program.

Failures of any of the pre-construction tests will require that the Contractor make the necessary changes in shotcrete materials, mixture design or application, prior to re-shooting the test panels. No work shall commence until the pre-construction testing requirements have been met.

6.3 Field Testing. One test panel shall be shot for each nozzle orientation for every 15 m^3 of shotcrete. Test panels shall be produced, by the Contractor, in accordance with the requirements of ASTM C1140 with the exception that the minimum dimensions shall be 450x450x150 deep. Panels shall be conducted of wood and sealed plywood, with 45^0 sloped edge forms to permit escape of rebound. Field testing panels shall not contain reinforcing steel or wire mesh. Field test panels shall be stored, handled and cured as indicated in Section 6.2.

With the exception of plastic air and slump, specimens shall be obtained from the test panel for the tests indicated in Table 2, of this specification, as well as the visual requirements as per ACI 506. Compressive strength shall be determined from coring using a minimum core diameter of 75 mm and a length to diameter (l/d) ratio not less than 1:1. Compressive strength testing shall be conducted in accordance with CSA/CAN A23.2-14C. A minimum of three cores shall be taken and the average compressive strength shall be at least 85% of the specified compressive

strength and no individual test result less than 75% of the specified strength.

Three 75 mm diameter cores shall be tested at the age of 28 days for Boiled Absorption and Permeable Voids in accordance with ASTM C642. A minimum of one core shall be tested at 28 days for chloride permeability in accordance with ASTM C1202. Shotcrete mixtures shall meet the performance requirements of Table 2.

6.4 Acceptance. Shotcrete shall be accepted provided that it meets the performance requirements of Table 2 of this specification. The Engineer shall have authority to accept or reject the shotcrete work. Shotcrete which does not conform to the project specifications may be rejected either during the shotcrete application process or on the basis of the tests on the test panels or completed work.

Deficiencies observed during the shotcrete application process, but not limited to those listed hereafter, shall constitute cause for rejection of the plastic shotcrete.

- Failure to properly control and remove build up of over spray and rebound;
- Incomplete consolidation around reinforcing steel, mesh, and anchors;
- Excessive shotcrete rebound, or fibre rebound in fibre reinforced shotcrete;
- Incorporation of sand lenses, excessive voids, delaminations, sags and sloughing;
- Failure to supply shotcrete to the required line and grade and tolerance;

If the plastic shotcrete is rejected, the Contractor shall stop the work and take all measures necessary to correct the deficiencies.

The Contractor shall, whenever possible, perform remedial work to correct deficiencies while the shotcrete is still plastic.

The Engineer shall examine the completed shotcrete work. The hardened shotcrete shall be examined for any evidence of excessive plastic or drying shrinkage cracking, tears, feather edging, sloughs or other deficiencies. Sounding shall be used to check for delaminations, voids or sand pockets.

If the results of the compliance tests from shotcrete test panels, or assessment of the plastic and hardened shotcrete indicate non-conformance of the shotcrete to the project specifications, the Engineer shall implement a program of evaluation of the in-place shotcrete. Such evaluation shall include, but not limited to:

- Extraction/testing of cores from the in-place shotcrete at locations detailed by the Engineer;
- Sounding or other appropriate non-destructive techniques to check for delaminations;
- Diamond saw cutting or coring to check the adequacy of encasement of reinforcing steel, mesh and anchors.

Shotcrete which is proven to be non-conforming to the project specifications shall be removed and replaced by the Contractor at no cost to the Department.

6.5 Shotcrete Repair. Shotcrete which is identified as being defective while still plastic shall be removed, using spades, scrapers, or other suitable mechanical devices. High pressure water jetting may be used, subject to acceptable disposal of the removed shotcrete and slurry.

Hardened shotcrete which is identified as being deficient shall be removed, using the same basic procedures used for removal of deteriorated concrete. Care shall be taken to avoid damage to reinforcing steel, mesh and anchors. Any damage to the steel, mesh or anchors, during the shotcrete removal process shall be replaced at no cost to the Department.

All prepared repair areas shall be inspected and approved by the Engineer prior to the replacement of any repair shotcrete. Repair shotcrete shall be placed, finished, cured and protected in the same manner specified for shotcrete work.

The Contractor shall bear the cost for all repair and for non-conforming shotcrete.

7.0 METHOD OF MEASUREMENT

7.1 General. Measurement shall be made at the contract unit price per square meter of repaired concrete area. When repairs are made to the original lines and dimensions, areas where deteriorated concrete is removed, up to

150 mm depth, shall be measured and the quantity computed. Any area where the removal of unsound concrete exceeds more than 150 mm into the underlying concrete shall be identified and computed separately.

When the shotcrete jackets encase the element, the thickness of the shotcrete shall be a minimum of 100 mm beyond the original lines, and the measurements shall be based on the original dimensions. The areas where deteriorated concrete is removed and where the thickness of the shotcrete repair will exceed 150 mm (including the 100 mm jacket) shall be measured and computed separately.

All quantity pay items shall be identified and agreed to prior to the shotcrete application. No additional provision shall be made for formwork, surface preparation, anchors, reinforcement or any item incidental to the work.

8.0 BASIS OF PAYMENT

8.1 General. Shotcrete shall be paid at the contract unit price per square metre. In addition to this payment item, the Contractor shall be paid at a rate equal to fifty (50) percent of the contract unit price per square meter bid for repairs exceeding 150 mm in thickness. The payment shall be considered full compensation for the cost of furnishing all materials, aggregates, cement, supplementary cementing materials, water, admixtures, equipment, falsework, forms, bracing, labour, curing, surface finish and all other items of expense required to complete the work as shown on the plans and as outlined in the specifications. There shall be no other consideration for payment caused by the depth of repair or degree of difficulty of repair for this work.

9.0 WARRANTY

SECTION 17 - COATINGS FOR STEEL STRUCTURES

1.0 DESCRIPTION

This section details the surface preparation of the substrate as well as the supply and application of coatings to steel structures. This section is applicable to coatings applied in the fabrication shop and on site.

2.0 REFERENCES

All reference standards shall be current issue or latest revision at the first date of tender advertisement. This specification refers to the following standards, specifications or publications:

- ASTM D 269, Test Method for Insoluble Matter in Rosin and Rosin Derivatives
- ASTM D 4541, Test Method for Pull-Off Strength of Coatings Using Portable Adhesion-Testers
- CGSB -GP-12C, Standard Paint Colours, Parts 1 to 3
- CGSB 1-GP-171M, Coating, Inorganic Zinc
- CGSB 1-GP-180Ma, Coating, Polyurethane, Two Package, General Purpose
- CGSB 164-GP-IMP, Leachate Extraction Procedure.
- CSA-S269.2-M87 Access Scaffolding for Construction Purposes, the National Building Code of Canada
- SSPC, (Steel Structure Painting Council), Steel Structures Painting Manuals - Volumes 1 and 2, “Good Painting Practice” and “Systems and Specifications”
- SSPC PS 20.00, Zinc-Rich Primers
- SSPC-Guide 6, Guide for Containing Debris Generated During Paint Removal Operations
- SSPC-Guide 7, Guide for the Disposal of Lead-Contaminated Surface Preparation Debris
- Nova Scotia Test Method TM-11, Evaluation of Coatings for Steel

3.0 SUBMISSIONS AND DESIGN REQUIREMENTS

The Contractor shall submit three copies to the Department, of the following documents prior to the start of coating operations:

- Abrasive to be utilized along with manufacturer's specifications
- Coating(s) to be utilized along with manufacturer's specifications
- Material Safety Data Sheets for all products. MSDS must remain at the place of work at all times.
- Design of platform, scaffolds and enclosure stamped by a Professional Engineer

4.0 MATERIALS

All materials shall be supplied in new condition by the Contractor. Two component coatings shall be packaged separately.

The components shall be packaged in such proportions that are consistent with the manufacturer’s normal method of packaging. Each container shall bear a label on which shall be clearly shown the name of the manufacturer or brand name of coating, the lot number, and date of manufacture. The container shall be coated if necessary to prevent attack by the coating components.

4.1 Coating Systems. Coatings applied to structural steel shall consist of one of following systems:

- System “A”: Inorganic zinc primer plus high build modified aluminum epoxy mastic mid-coat plus high build aliphatic polyurethane topcoat. Unless otherwise stated, the topcoat shall be green meeting the requirements of colour 34108 as designated by Federal Standard Colors.
- System “B”: Inorganic zinc primer plus high build modified aluminum epoxy mastic mid-coat, plus high build modified aluminum mastic topcoat.
- System “C”: Bare steel - uncoated except for 3 metres from the end of the Structure, at the abutments, and 3 metres on each side of expansion joints, which will be coated with “System A” with colour to match weathering steel.
- System "D": Inorganic Zinc only.

4.1.1 Application of Coating Systems. The inorganic zinc primer shall be applied to the prepared metal surface by airless spray equipment or as recommended by the manufacturer. For new construction the inorganic zinc shall be

applied at the shop. Application of the intermediate and topcoats shall be done in the field after erection. Under exceptional circumstances the Engineer may permit the intermediate coat to be applied at the shop. Written permission from the Engineer shall be received prior to the application of the intermediate coat at the shop.

For steel box girders, only the inorganic zinc primer is required inside of the boxes.

4.2 Coatings. The Contractor is responsible for ensuring that the latest formulation of the proposed coating products to be utilized in the work satisfy the requirements of this specification. The primer and topcoats must be compatible with each other and must be manufactured by the same company. The topcoat colour shall be green for System "A", leafed aluminum for System "B" and the colour of the topcoat shall match the weathering steel for System "C". All coating work and systems for the purpose of this specification shall be considered a fully cured system prior to being accepted by the Engineer. No accelerators for the purpose of force curing the coating system will be accepted without prior written approval.

4.2.1 Approved Systems. The coatings indicated below are approved by the Department based on past performance:

- Ameron: Dimetcote 9 Inorganic Zinc, Amerlock 400 AL Aluminmastic, Ameron 450 H Aliphatic Polyurethane
- Carboline:Carbozinc 11 Inorganic Zinc, Carbomastic 15L/O, Carboline 133 HB.
- Devoe: Catha-Coat 304 Inorganic Zinc, Bar-Rust 236 Aluminum Epoxy, Devthane 389 H Aliphatic Urethane Enamel
- International: Interzinc 22 Inorganic Zinc, Interplus 256 Aluminum Epoxy, Interthane 870 UHS
- Coating systems approved by NEPCOAT on the qualified Products List “A” for use on new and 100% bare steel. Film thicknesses requirements for NEPCOAT systems shall adhere to Section 17 Coatings for Steel Structures, 5.2 Film Thickness.

Coatings manufacturers who wish to have their products included on the approved products list are referred to TM-11.

4.3 Ethyl Silicate/Potassium Zinc Rich Primer. The inorganic zinc primer shall be a two-component self-curing type which, when mixed and applied in accordance with the manufacturer's instructions, cures without the use of a separate curing solution, and shall have the properties described herein. The inorganic zinc primer shall meet or exceed the requirements of Steel Structures Painting Council Specification PS 20.00 (Type 1).

4.3.1 Pigment. The zinc portion of the pigment shall be a finely divided zinc powder containing, by weight, a minimum of 94% metallic zinc. All other fillers contained in the pigment shall be inert substances with an average particle size of 6 microns.

4.3.2 Vehicle. The vehicle components shall consist primarily of a partially hydrolyzed ethyl and or potassium silicate, in an appropriate hydrocarbon solvent. The storage life of the vehicle shall be nine (9) months minimum at 25°C.

4.3.3 Mixed Coating. The total zinc portion shall be at least 84 percent by dry weight of the total solids of the dried coating. The coating shall tolerate up to 1% water contamination by weight without gelation, within five (5) minutes. The usable pot life of the mixed coating shall be not less than four (4) hours at 25°C. There shall be no hard settling which cannot be easily re-dispersed during this period.

4.3.4 Colour. The inorganic zinc coating shall be formulated so as to produce a distinct contrast in colour with the blast cleaned metal surfaces.

4.4 High Build Modified Aluminum Epoxy Mastic. The coating shall be a self-priming, two-component, high build, aluminum filled epoxy mastic. The coating shall be compatible with inorganic zinc primers, catalyzed epoxies, catalyzed phenols or other coatings, as recommended by the coating manufacturer. The coating shall also be compatible to be used over most generic types of coatings which are tightly adhering and properly prepared.

Solids by volume of the coating, when mixed, shall be 90 ± 2% when tested in accordance with ASTM D 269, modified to a dry time of 24 hours at 24°C.

4.4.1 Pigment. The primary pigment shall be aluminum and shall represent a minimum of 17% of the total pigment by weight.

4.4.2 Mixed Coating. The mixed coating must be capable of being top coated with most generic types of coatings after curing a minimum of 24 hours at 24°C. Final cure shall be attained after 5 Days minimum at 24°C. The pot life of the mixed coating shall be a minimum of 4 hours when the material and ambient temperature are 24°C and the material

has been thinned according to manufacturer's recommendations. The coating shall be capable of being applied when the material is at a temperature as low as 10°C.

4.5 High Build Aliphatic Polyurethane Finish Coat. The high build aliphatic polyurethane finish coat shall be a two component, high solids, high build, spray applied coating with a satin or semi-gloss finish that is highly resistant to weather, abrasion, corrosive fumes, splash and spillage of acids, alkalies, solvents, salts and water. It shall provide adequate hiding when applied in a single coat directly over aluminum mastic and shall provide long-term colour and gloss retention. The coating shall be compatible with inorganic zinc primers, catalyzed epoxies, catalyzed phenols or other overcoats, as recommended by the coating manufacturer. The coating shall also be compatible to be applied over most generic types of coatings which are tightly adhering and properly prepared.

4.6 Mixed Coating. The two components of the system shall have a shelf life of 12 months minimum. The pot life for the mixed material shall be four hours at 24ºC.

4.7 Blast Media. Abrasive blast media shall be clean and sharp silica sand, washed industrial sand, steel grit, or a slag material of suitable size, weight and angular shape to produce the degree of cleaning specified and anchor pattern/profile required. The blast media shall contain no more than 1% by weight of water soluble solids. There shall be less than 10 ppm oil in the abrasive and no trace of salts or toxic materials. When cleaning by air blasting with sand abrasives, adequate separators and traps shall be provided to remove detrimental amounts of water and oil from the compressed air before it reaches the nozzle.

Materials unsuitable for use in the work shall be disposed of off-site in an acceptable manner and at the Contractor’s expense. With the exception of steel grit, reclaimed abrasive will not be acceptable.

5.0 CONSTRUCTION METHODS

The coating system shall be as detailed in these specifications. The manufacturer’s data sheets are part of this specification. Should there be any conflict between these two specifications the decision of the Engineer shall prevail. All surfaces to be coated shall be free from contamination prior to any application. No coating work shall be done when the surface is less than 3°C above the dew point, nor when it is likely that there will be a change in the weather within four (4) hours of application that would be detrimental to the coating system. All coatings shall be uniformly applied without sags, foreign materials, dust, contamination, cracks or other blemishes. Defects shall be removed and repaired at the discretion of the Engineer.

The Contractor shall arrange for site visits from the coating manufacturer's technical representative a minimum of one visit per month while the job is in progress. For projects scheduled for completion in less than one month the manufacturer's representative shall arrange to visit the site at least once. After each visit, the manufacturer's representative shall provide a written report to the Engineer within 5 working days.

All coating work and systems for the purpose of this specification shall be considered a fully cured system prior to being accepted by the Engineer. No accelerators for the purpose of force curing the coating system will be accepted without prior written approval. No coating shall be applied when the wind speed exceeds 15 km per hour unless the Contractor can demonstrate to the Engineer that adequate precautions have been made available which are acceptable to the Engineer. The decision of the Engineer shall be final.

5.1 Surface Preparation. Abrasive blast cleaning equipment shall be of a quality and size sufficient to perform the work within the time available in the contract. Blast equipment must have adequate in line ‘driers’ to ensure moisture is completely removed during blasting operations. All spray and blasting equipment must be adequately grounded to avoid buildup of static electricity. Detrimental amounts of water and oil shall be removed from any compressed air supply used for blast cleaning by means of appropriate functional traps, separators and heaters before the airstream reaches the nozzles.

All deposits of oil or greasy contamination shall be removed in accordance with SSPC-SP 1, "Solvent Cleaning" before commencing other surface preparation.

Field coated surfaces shall be cleaned using high pressure fresh water wash to remove all sand, dirt, carbonation, salt and other contaminants. Enclosure shall be provided at this time if necessary to prevent wash material from entering the environment. Wash water shall be filtered through an approved filter medium (eg. non-woven geotextile, minimum tensile strength 600 N, permeability 0.22 cm/sec) prior to discharge into the environment. Total maximum chloride contamination on any surface shall not exceed 30 ppm as tested using a standard SCAT kit. The high pressure wash shall start at the top and proceed down to the bottom of the steel. Special emphasis must be placed on corners and

crevices where members are joined together.

Solvent wash solutions shall have prior approval.

All weld splatter, slag, rust, burrs, slivers etc. shall be removed prior to coating in accordance with the requirements of SSPC-SP 2 "Hand Tool Cleaning" and/or SSPC-SP 3 "Power Tool Cleaning". Any sharp edges, not in accordance with Good Painting Practices, shall be ground to produce a minimum radius of 4 mm. Corners and edges of flanges, stiffeners and bracing shall be broken on items which are to be coated. This work shall be approved by the Engineer or their representative prior to blast cleaning.

All steel surfaces to be coated shall be abrasive blast cleaned in accordance with the requirements of SSPC-SP 10, "Near-White Blast Cleaning".

Steel surface profile requirements shall be a minimum 20% of the total film thickness specified, or as recommended by the coating manufacturer to achieve good coating adhesion and coverage.

5.1.1 Field Disposal of Spent Abrasive. The spent abrasive material is to remain dry at all times. Refer to SSPC Guide 7.

Representative samples of the spent blasting medium containing coating chips and dust removed from the bridge will be taken by the Engineer's representative and submitted to a laboratory to be tested according to leachate test procedures in the CGSB provisional standard 164-GP-IMP. The abrasive must be kept in a water tight enclosure until the results of the tests are known in order to ensure that no contaminants are released into the Environment.

If the leachate test results indicate the spent blasting medium is classified as a non-hazardous solid waste, the Contractor will be required to transport the medium from the project site to an approved waste disposal site. The Contractor shall pay any required tipping charges.

If the leachate test results indicate the spent blasting medium is classified as a hazardous solid waste, the Contractor shall transport the medium to a temporary storage location at the Department base property that has a fenced storage compound as directed by the Engineer. The Contractor shall pay any required loading and transportation charges to the Department's base. Ultimate disposal of the stored material would then become the responsibility of the Department.

Materials that qualify under the Dangerous Goods and Hazardous Wastes Management Act must be disposed of in a manner acceptable to the Nova Scotia Department of Environment and Labour and as approved by the Engineer.

All blast abrasive material shall be weighed before being delivered to site. The spent abrasive shall be weighed as it is removed from the site. The Contractor shall provide every fortnight to the Department, a weigh slip for all abrasive delivered to and removed from the site. The Contractor shall recover a minimum of 90% of the abrasive used in the work.

The Department will not entertain any claim by the Contractor due to delays in sampling and/or receiving leachate test results for the spent abrasive.

5.2 Film Thickness. All coatings shall be applied as per the specified minimum and maximum film thicknesses. The nominal rate of application for the coatings systems shall be:

- System "A" shall have a minimum/maximum DFT of 250 - 400 μm. The inorganic zinc shall be applied at 75 ± 25 μm DFT, the aluminum epoxy mastic shall be applied at 150 ± 25 μm DFT and the aliphatic polyurethane shall be applied at 100 ± 25 μm DFT;
- System "B" shall have a minimum/maximum DFT of 300 - 450 μm. The inorganic zinc shall be applied at 75 ± 25 μm DFT and each coat of aluminum epoxy mastic shall be applied at 150 ± 25 μm DFT;
- System "C" shall have a minimum/maximum DFT of 250 - 400 μm (as System "A");
- System "D" shall have a minimum/maximum DFT of 100 - 150 μm.

All measurements concerning DFT shall be measured by calibrating the Dry Film Gauge to read zero at the "top of the blasted profile". Measuring methods and equipment shall conform to SSPC-PA2.

For coating systems A, B and C (where applicable for system C) all edges, corners, crevices, rivets, bolts, welds, and

sharp edges shall be stripe coated with the aluminum polyamide epoxy mastic prior to the steel receiving the final coat in accordance with the coating manufacturer's recommendations. Such striping shall be done with brushes, daubers, or mitts and extend a minimum of 2.5 cm from the edge being coated. Brushes and daubers shall be provided and used to work coatings into cracks, crevices and locations which cannot be adequately coated by spray application.

5.3 Repair of Defects. Before application of any further coat of material, all damage and/or contamination to previous coats shall be repaired to the satisfaction of the Engineer. In the case of repair, the procedures shall be in an acceptable manner as authorized by the Engineer. In the case of removal, the work shall be replaced by work and materials which shall conform to the specification. This clause shall have full effect regardless of the fact that the defective work may not have been previously identified by the Engineer.

5.4 Environmental / Safety Controls. The Contractor shall ensure during the prosecution of all items of work under the agreement to protect and preserve the environment in conformance with the document "Guidelines for the Application and Removal of Structural Steel Protective Coatings" forming part of this Specification.

When washing or removing coating, the Contractor shall provide protective enclosures and filters to contain dust or water in an effective manner and to minimize impacts from dust, water and coating particles entering the environment.

The Contractor shall also ensure that waste materials, i.e. used coatings, solvents and refuse will not be disposed of in the aquatic environment, elsewhere on the highway or adjacent the right-of-way. Such materials shall be disposed of according with applicable legislation.

The methods and materials for constructing the protective enclosure in accordance with regulatory agency requirements shall be the responsibility of the Contractor.

Materials collected or accumulated within the enclosure shall be removed and contained so as to prevent their escape. The collected materials shall be disposed of off the site.

5.4.1 Platforms and Enclosures. Where environmental protection is required, i.e. to protect the work piece or work place from the environment, or the environment from the work being performed, it shall be the responsibility of the Contractor. This shall include, but not be limited to, tents, heating or ventilating, negative air pressure, dust collectors, enclosures etc. These shall be provided at no additional cost to the Department. For field operations, the Contractor shall install a full (total) enclosure surrounding all washing, coating and surface preparation activities. Refer to SSPC Guide 6.

The plans and drawings for the enclosure, scaffolds and platforms shall be submitted for review as detailed in Section 3.0. Construction shall not begin until all these documents have been reviewed. Drawings are to included but not limited to the following detailed information:

- Method and schedule of construction
- Actual loads to be imposed on the existing structure
- Details of proposed attachments to the existing structure
- Size and shape of all platform components
- Scaffold erection and dismantling diagrams
- Material specifications and sources
- Arrangement of access platforms, ladders and guardrail.

Access scaffolding and supporting platforms are to be designed in accordance with the provisions of CSA-S269.2-M87. Access Scaffolding for Construction Purposes, the National Building Code of Canada and all relevant codes and standards referenced therein.

At the conclusion of sandblasting and coating operations, the protective enclosure shall be dismantled and removed from the site.

6.0 QUALITY CONTROL / QUALITY ASSURANCE

All material and equipment furnished, and work done, shall be subject to inspection by the Engineer. An appointed Inspector may be on site during all operations. Such inspection shall not relieve the Contractor of the responsibility for furnishing the qualified labour, equipment, staging etc. necessary to meet the requirements of this specification, or the safe accessibility to the work for the purposes of inspection.

The Contractor shall keep accurate records containing details such as weather, temperatures, dew points and times for the various coating applications and shall make these records available to the Engineer upon request.

All work shall be subject to inspection by the Engineer or appointed representative, who shall be given at least 48 hours notice prior to work commencing. The Contractor shall coordinate activities with the inspector to ensure that all aspects of the work are inspected. Defective work not conforming to this specification shall be repaired at no additional cost to the Engineer.

Methods of inspection and inspection procedures shall be as directed by the Engineer or appointed representative, who shall govern both methods and standards. All findings will be recorded and will become part of the Project's Quality Assurance Records.

Coating inspection shall be performed in accordance with the procedures outlined in SSPC Manual, Volume 1, Chapter 6, "Inspection".

Profile measurements shall be made on a random basis by use of replica tape and spring micrometer or by micrometer depth gauge.

Dry film coating thickness readings shall be performed in accordance with SSPC-PA 2, "Measurement of Dry Paint Thickness with Magnetic Gages".

When necessary, the testing of ambient and surface temperature and humidity shall be done by thermometer, surface thermometer, and psychrometer with recognized psychometric tables.

Destructive testing may be required where inadequate adhesion of the coating(s) is suspected. Adhesion testing shall be done in accordance with ASTM D 4541. The minimum adhesion of the coating under evaluation shall be 1.7 MPa (250 psi). Coatings damaged as the result of destructive testing shall be repaired at the expense of the Contractor if the adhesion does not meet the acceptance criteria. Should the coating meet the adhesion requirements repairs will be paid for by the Department at a rate agreed to by the Department and the Contractor. Repair procedures and materials shall be approved by the Engineer prior to application.

7.0 METHOD OF MEASUREMENT

The preparation of documentation, the furnishing of materials, equipment and labour shall not be measured for payment but shall be considered as incidental to the work.

8.0 BASIS OF PAYMENT

Payment for Surface Preparation and Protective Coating shall be paid at the contract unit price, lump sum, which shall be full compensation to complete the work specified including: all materials, labour, tools, tarpaulins, containment/work enclosures, equipment and incidentals, to the satisfaction of the Engineer. Periodic progress payments will be estimated based upon a percentage basis of work complete.

9.0 WARRANTY

The Contractor shall warrant the coating system applied under the terms of this contract for new construction to be free of defects in materials and workmanship for a period of 60 months from the date the work is accepted by the Department.

The Contractor shall warrant the coating system applied under the terms of this contract for recoating of existing structures to be free of defects in materials and workmanship for a period of 36 months from the date the work is accepted by the Department.

During the warranty period, the Department or its representative will inspect the coating system, and will advise the Contractor and Manufacturer, in writing, of any repairs that are required. Intermediate inspections may be made and warranty repairs claimed and repaired by the Contractor and Manufacturer each year of the 36 or 60 month warranty period.

Failure of the protective coating system may include but not be limited to:

- Any debonding or failure of adhesion of the coating either to the structural steel or other coatings
- The appearance of any rust stains on the coated structure due to loss of coating or leaking from joints between

structural members (staining from leaking expansion joints or from structural components not coated under the contract will be exempt from the provisions of the warranty)
- Failure of the coating to resist chipping and abrasion from normal site conditions
- Any loss of normal gloss or rapid colour change

Warranty repair will be completed within 45 days of notification, or if this would place repair in unsuitable weather conditions, by June 15 of the following year.

Failure to honor the warranty will result in the Contractor being disqualified, from bidding future work of this nature, for a period of 2 years.

Repairs under warranty shall include all costs to supply material, labour, and equipment necessary to restore the coating system to acceptable condition. Payment for warranty repairs will not be made separately but will be included in the unit bid lump sum bid for Surface Preparation and Protective Coatings.

SECTION 18 - CAST IN PLACE HIGH PERFORMANCE CONCRETE (HPC)

1.0 DESCRIPTION

This section details the requirements for materials and methods in the proportioning, mixing, transporting, placing, finishing and inspection of Cast in Place High Performance Concrete (HPC).

2.0 REFERENCES

All reference standards shall be current issue or latest revision at the first date of tender advertisement. This specification refers to the following standards, specifications or publications:

- CSA Test Method A23.2-23C, Electrical Indication of Concrete's Ability to Resist Chloride Ion Penetration
- Division 5 Section 7, Cast in Place Concrete

3.0 SUBMISSIONS AND DESIGN REQUIREMENTS

Submission and design requirements shall be governed by the provisions found in Division 5 Section 7 of the Standard Specification, except that additional requirements as specified herein shall apply.

At tender closing the Contractor shall advise the Department of the qualified ready mix concrete supplier, sources of fine and coarse aggregate, cement, fly ash and admixtures proposed for the project. The Contractor shall not be permitted to change the concrete supplier or alter mixture proportions without written permission from the Department.

3.1 Mixture Proportions/Test Requirements. Mixture proportions shall be selected on the basis of a 75 year design life and all concrete in the structure shall have a minimum compressive strength of 45 MPa in 28 days. In addition to the test requirements found in Division 5 Section 7, the Contractor shall perform all necessary tests indicated in this specification to demonstrate the long-term performance and durability of the materials and concrete mixtures.

The Contractor shall provide the following information, at least two weeks in advance of concrete placement, on the concrete mixture design proposed.

- Plastic Concrete Tests
- Slump (CSA A23.2-5C)
- Air Content of Plastic Concrete by Pressure Method (CSA A23.2-4C)
- Mass Density and Yield (CSA A23.2-6C)
- Compressive Strength Testing (CSA A23.2-9C)
- Two specimens to be tested at 28 days
- Air Void Analysis on Hardened Concrete (ASTM C457) tested at 7 days
- Electrical Indication of Concrete's Ability to Resist Chloride Ion Penetration tested within 56 days
- Alkali Reactivity Test Results

4.0 MATERIALS

4.1 Aggregates. The fine and coarse aggregates shall be normal density and conform to the requirements of CSA A23.1, except as modified herein. Upon acceptance of the aggregates, the source and method of manufacture shall not be altered for the duration of the contract. Aggregates shall be stored and maintained in such a manner to avoid the inclusion of foreign materials in the concrete and such that no equipment will be operated on the storage piles. The stockpiles shall be constructed to prevent segregation or contamination. Prior to the start of any concrete placement, the ready mix concrete supplier shall have at the place of production, sufficient quantity of aggregates to complete the entire concrete section scheduled for that day.

Fine aggregate shall be washed and classified to conform to the gradation limits specified in CSA Standard A23.1. Coarse aggregates shall consist of washed crushed stone having a nominal size of 20 mm. The use of Alkali Reactive Aggregates will not be permitted. Coarse aggregates shall be non-reactive with respect to alkali aggregate reactivity (AAR). When tested in accordance with CSA A23.2-14A, the expansion of the test samples incorporating the aggregate source shall not exceed 0.04 percent at one year. In the absence of test data developed using the test method of CSA A23.2-14A, existing coarse aggregate sources having a satisfactory history of conformance, when

tested in accordance with CSA A23.2-25A and having expansions not exceeding 0.150 percent, shall be acceptable. A satisfactory history of conformance shall be considered to consist of at least five (5) consecutive tests performed over a period not to exceed ten (10) years. Aggregate sources without a satisfactory history of conformance shall be evaluated for potential contribution to AAR in accordance with CSA Standard Practice A23.2-27A using the test method of CSA A23.2-14A. The maximum combination of flat, elongated and flat and elongated particles, as defined in CSA A23.2-13A, shall not exceed 10% of the mass.

4.2 Water/Admixtures. Water used in concrete production and curing shall conform to CSA A23.1 and be clean and free from injurious amounts of oil, acid, alkali soluble chlorides, organic matter, sediment or any deleterious substances.

Air entraining admixtures shall meet the requirements of ASTM C260. Other chemical admixtures shall meet the requirements of ASTM C494. Admixtures shall be stored above freezing temperatures at all times and in accordance with the manufacturer's recommendations. Calcium chloride or any admixtures containing chlorides shall not be used.

4.3 Cementing Materials. Portland cement, blended cements and supplementary cementing materials shall meet the respective requirements of CSA Standard A3001.

4.4 Concrete Mixture Design and Properties. All mixture designs shall be proportioned as normal density concrete in accordance with CSA Standard A23.1, Alternative #2, and the Contractor shall accept responsibility for the concrete mixture and its properties. Concrete shall be proportioned using Portland cement, Type SF silica fume, fine and coarse aggregates, air entraining, water reducing, and superplasticizing and/or set retarding admixtures. Other supplementary cementing materials may include Class F fly ash and or Type S ground granulated blast furnace slag. Set retarding admixtures may be used as ambient and site conditions warrant.

Concrete mixtures shall be designed to meet the following:

- Min. cementing materials content 420 kg/m^3
- Max. water/cementing materials ratio 0.35
- Nominal size coarse aggregate 20 mm
- Max. slump before superplasticizer 60 mm
- Slump after superplasticizer 180 +/- 30 mm
- Min 28 day compressive strength 45 MPa
- Maximum spacing factor of hardened concrete not to exceed 250 µm
- Chloride ion penetrability within 56 days <1000 coulombs
- Maximum concrete temperature (from delivery equipment)
- thickness > 2 metres 18 ^oC
- thickness < 2 metres 25 ^oC
- Maximum concrete temperature(insitu) 70 ^oC
- Maximum temperature gradient 20 ^oC/metre

Superplasticizer shall be used in all concrete.

The mass of Type S silica fume, if added as a separate component to the mixture during the batching process, shall consist of full packages of the silica fume, rounded up to the next full package as required by the batch volume.

4.5 Curing and Finishing Materials. Curing compounds shall conform to ASTM C309 Type 2. Burlap for wet curing shall be free from holes, clay or other substances which would have a deleterious effect on concrete.

Evaporation reducer forming a monomolecular film which retards evaporation, shall be “Confilm” by BASF or an approved equivalent. The mixing ratio for Confilm shall not be less than one part of evaporation reducer to four parts of water.

4.6 Concrete Sealer. Concrete sealer shall be Type 1C silane penetrating transparent sealer and approved by Alberta Ministry of Infrastructure. The Contractor shall supply proof of acceptance to the Department prior to use.

5.0 CONSTRUCTION

5.1 General. Concrete shall be mixed, transported, placed and finished in accordance with Division 5 Section 7 except as modified herein. The depositing of concrete shall be a continuous operation until the placing of the section is

completed. To ensure that the concrete is continuous and monolithic in nature, the time between previously placed concrete and newly deposited concrete shall not exceed 30 minutes.

Concrete shall not be placed when the air temperature exceeds 25 ^{o}C or is likely or predicted to rise above 25 ^{o}C during placement. The temperature of the formwork, reinforcing steel or other material on which concrete is to be placed shall not exceed 25 ^{o}C.

Concrete placing methods and equipment shall be such that the concrete is conveyed and deposited at the specified slump, without segregation, and without changing or affecting the other specified qualities of the mixture. Vibrators shall be used to consolidate the concrete in all phases of construction.

The deck shall be finished using a mechanical screed machine followed by bullfloating and final texturing. Final finishing, texturing and curing shall be completed within 1.5 metres behind the screed machine. A work bridge (mobile catwalk) shall be used following the screed machine for bullfloating and finishing operations. An evaporation reducer shall be used directly after initial screeding and/or between finishing operations as needed.

Decks overlayed with a wearing surface shall be textured as indicated in Division 5 Section 7 of the Standard Specification.

If concrete placement in the bridge deck is carried out with pumps or cranes, the Contractor shall be required to have available on site, at all times during placement, a minimum of two pumps or cranes or combination thereof. Concrete placement in bridge decks shall not be permitted between December 1st and March 31st unless otherwise advised by the Engineer.

The Contractor shall take appropriate measures required to minimize defects in the concrete. These measures include but are not limited to: installation of wind breaks, installation of shelters, covering, protection from premature drying, timing of placements, additional workforce, and/or equipment. Upon completion of the work, the Engineer will conduct a survey to determine the extent, if any, of defects present in the structure. The method of repair for defects identified, requiring remedial action, shall be dependent upon the location and extent of the defect. Defects identified may result in repair, or rejection and replacement.

5.1.1 Cracks. All cracks 0.15 mm and greater in width shall be repaired within the warranty period, regardless of location, size or cause in accordance with the following methodology. Fine cracks are defined as less than 1 mm, medium cracks were 1 to 2 mm, and wide cracks were greater than 2 mm. Fine cracks identified for repair shall be filled with a low viscosity epoxy resin such as Sika Canada's Sikadur 52, Sikadur LV55, or BASF'S Epoxeal GS Structural or an approved equal. The resin shall be applied by pressure injection or by gravity feed into the crack and allowing the sealant to be absorbed. Additional applications may be required, depending on the absorption and crack depth. Subsequent applications, if required by the Engineer, shall be made as soon as possible after the prior application has sufficiently set. All use and placement of resin materials shall be in accordance with the manufacturer's written instructions. Wider cracks, as identified from the survey may require a higher viscosity resin for repair. The Contractor shall submit manufacturer's data for the proposed resin in this case for approval prior to use. Excess resin in the vicinity of the crack shall require removal by grinding and/or abrasive blast cleaning at the Engineer's direction.

5.2 Curing: Decks shall be cured by fogging prior to covering with wet burlap. Fogging shall commence within 20 minutes after initial screeding and shall continue until the concrete achieves initial set to allow for the placement of the wet burlap. Water curing may be used in lieu of fogging, however, curing shall commence immediately to prevent the occurrence of cracking or drying of the surface. Burlap shall be pre-soaked by immersing in water for a period of 24 hours prior to placing. Two layers of burlap shall be applied to the surface overlapping each strip by 150 mm. Burlap shall be maintained in a continuously wet condition for seven consecutive days. Burlap shall be covered with a layer of moisture vapour barrier immediately following the placement of the burlap.

The deck shall be maintained wet for a period of not less than 7 days. If work is conducted on other sections of the superstructure, before the 7 day curing period is completed, the contractor must ensure that the deck is maintained wet at all times during this work.

All other sections of the structure may be cured with two (2) applications of curing compound (water based) applied within 20 minutes of initial screeding. Each application shall be applied at twice the manufacturer's suggested rate with the second application applied perpendicular to the first.

Where bonding is critical between finished surfaces, concrete sections shall be moist cured only as described above for the deck.

If formwork is used to aid curing, it shall not be removed until seven days after the concrete placement. In addition to the forms, areas exposed shall be cured in accordance with Division 5 Section 7.

5.3 Concrete Sealer. The Contractor shall apply two (2) coats of a silane penetrating sealer to all exposed concrete surfaces on the bridge, excluding the bridge deck driving surface, soffit, approach slabs, prestressed girders (if applicable), and surfaces covered with a waterproofing membrane or an asphalt concrete pavement wearing surface. Sealer shall be applied to all vertical surfaces to a depth of 600 mm below proposed finish grade.

The sealer shall be applied in accordance with the manufacturer's written instructions, however, a minimum of two coats shall be applied and the second coat shall be perpendicular to the first coat. As a minimum, surface preparation shall consist of high pressure (minimum 20 MPa (3,000 psi)) water or abrasive blast cleaning to provide a uniform texture and appearance removing curing compounds, dirt, oil, grease, tar, and other deposits which may affect the absorption of the sealer. Prior to the application of the sealer, concrete shall be moist cured for a period of 7 days prior to air drying for an additional 14 days.

A Manufacturer's representative shall be present during the application of the sealer.

6.0 QUALITY ASSURANCE

Concrete shall be tested as per Division 5 Section 7 except as modified herein. The Department or it's representative shall have the right to sample and test all materials used in the mixture design and given access to the production facilities of the ready-mix concrete supplier. Materials failing to meet this specification shall be immediately rejected.

Concrete shall be tested for slump, air content and temperature prior to and after the addition of superplasticizer (if added on site). Testing shall be carried out at the point of discharge from the truck and as close as possible to final deposit into the forms. The results obtained from testing as close as possible to final deposit into the formwork will be used for the purpose of acceptance and rejection. Sufficient superplasticizer shall be added to produce a consistency as indicated in Section 4 of this specification. Superplasticizer, added on site, shall be mixed into the load a minimum of five minutes prior to retesting.

Concrete shall also be randomly tested for air void parameters and chloride ion penetrability in the hardened state. The frequency of testing for the air void parameters of hardened concrete and chloride ion penetrability shall be one (1) test for every 150 m^3, of the same class concrete, unless otherwise specified by the Engineer. The air void parameters shall be tested at 7 days and the chloride ion penetrability shall be tested within 56 days. A minimum of two tests each for air void parameters and chloride ion penetrability shall be conducted on each project with one of each carried out at the start of the project and one of each carried out near the end of the project.

7.0 METHOD OF MEASUREMENT

7.1 General. Measurement shall be made at the contract unit price per cubic metre for HPC. The quantity of concrete for payment shall be the volume in cubic metres computed from the dimensions shown on the drawings or as revised by the authority of the Engineer. No deductions shall be made for the volume of concrete displaced by steel reinforcement, joint material, structural shapes, chamfers, tops of piles, or cylindrical voids of 110 mm diameter or less.

8.0 BASIS OF PAYMENT

8.1 General. Payment will be made at the contract unit price bid per cubic metre for HPC or price adjusted as described below. The payment for HPC shall be considered full compensation for the cost of furnishing all materials, aggregates, cement, supplementary cementing materials, water, admixtures, including superplasticizers, and other materials, non-metallic expansion joint materials, tools, equipment, falsework, forms, bracing, labour, curing, surface finish, damp-proofing and all other items of expense required to complete the concrete work as shown on the plans, and as outlined in the specifications.

All costs associated with the crack repair, or removal and replacement including additional testing, inspection, and/or reporting, as the result of the presence of defects, shall be borne by the Contractor.

8.1.1 Penalty/Bonus Adjustment. The penalty or bonus adjustment will apply to the calculated quantity of cubic metres of concrete incorporated into the work and accepted by the Engineer. The total adjustment added to or subtracted from payments due to the Contractor shall be the algebraic sum of all penalties and bonuses calculated for all the sub-lots (as described in Division 5 Section 7) in excess of 2 m^3. A Penalty/Bonus adjustment shall not apply if the sub-lot is less than 2 m^3.

8.1.2 Penalty Adjustment for Compressive Strength. Concrete which fails to meet the required 28 day compressive strength, by 5 MPa or less and is proven to be structurally adequate, may be accepted at an adjusted price. The penalty adjustment will be calculated based on the following formula:

PA = V x ($10 (SS - TS))

where

PA = Penalty Adjustment ($/$m^3$)
V = Volume placed (m^3)
SS = Specified strength (MPa)
TS = Tested strength (MPa)

8.1.3 Bonus Adjustment for Compressive Strength. When the sub-lot exceeds the specified strength the Department will pay a bonus adjustment up to 5 MPa above the specified strength. The bonus adjustment will be calculated based on the following formula:

BA = V x ($2 (TS - SS))

where

BA = Bonus Adjustment ($/$m^3$)
V = Volume placed (m^3)
SS = Specified strength (MPa)
TS = Tested strength (MPa)

The bonus adjustment shall not exceed $10/$m^3$.

If there is an individual strength result more than 5 MPa less than the specified strength, no bonus will be assigned for the sublot.

8.2 Payment for Cold Weather Concreting. If it is considered necessary by the Department to place concrete in cold weather, additional payment for Cold Weather Concreting will be paid. Payment shall be as detailed in the Appendix C and shall be considered payment in full for the complete protection, as outlined in this specification.

If, in the opinion of the Engineer, the placing of concrete under cold weather conditions is a result of unjustified delays, negligence, etc. on the part of the Contractor, the precautions described herein shall be followed and the cost thereof shall be borne in full by the Contractor. If the Contractor wishes to place concrete during cold weather, but if in the opinion of the Engineer, this is not required to meet the original completion date, additional payment will not be made for the Cold Weather Concreting but the precautions taken shall follow the methods outlined herein. The Contractor must receive an extension, prior to the original completion date, if the contract exceeds the original completion date, before consideration will be given to the payment of Cold Weather Concreting.

8.3 Payment for Concrete Sealer. Payment for Concrete Sealer will be made at the contract lump sum price, which shall be full compensation for surface preparation, high pressure water and/or abrasive blast cleaning, installation, including labour, tools, equipment and incidentals necessary to complete the work to the satisfaction of the Engineer. Prior to the payment for this item the Manufacturer’s representative shall provide to the Department a written report confirming that the sealer was applied in accordance with the manufacturer’s instructions.

9.0 WARRANTY

SECTION 19 - ELASTOMERIC BEARINGS

1.0 DESCRIPTION

This section details the supply and installation of plain and steel reinforced elastomeric bearings.

2.0 REFERENCES

All reference standards shall be current issue or latest revision at the first date of tender advertisement. This specification refers to the following standards, specifications or publications:

- CAN/CSA-S6, Canadian Highway Bridge Design Code

3.0 SUBMISSIONS AND DESIGN REQUIREMENTS

Only bearings which comply with the Contract Documents and have been approved by the Engineer, in writing, shall be considered acceptable for supply. The Contractor shall submit in writing, a minimum of 30 days in advance of the installation, the name of the pre-approved manufacturer supplying the bearings, the manufacturer's part number and the physical dimensions of the bearing to be supplied.

The Contractor shall submit shop drawings four (4) weeks prior to fabrication. Drawings shall be stamped by a Professional Engineer registered to practice in Nova Scotia. Fabrication shall not proceed until the Engineer issues final approval of the shop drawings. The manufacturer shall provide the full data for the bearings, including as a minimum, the following:

- Individual laminate and total bearing dimensions,
- Part numbers for bearings,
- Maximum load capacity in compression,
- Compression stiffness,
- Maximum movement capacity in shear,
- Installation details,
- Load capacity at serviceability limit states Combination 1, including maximum compressive and permanent loads, compressive stiffness and shear stiffness,
- Number of steel plates in each bearing,
- Rotational capacity of each bearing under maximum and minimum load, and
- Material properties of the bearing components and test procedures employed to determine the properties.

The Contractor shall submit to the Engineer, in advance of the installation, the manufacturer's certification, as a written affidavit, that the materials supplied shall meet the specified requirements as detailed in the Contract Documents.

All bearings being supplied for the Work shall be approved in writing by the Engineer prior to the placement of the bearing into the structure.

4.0 MATERIALS

All materials shall be supplied by the Contractor and shall conform to the requirements of CAN/CSA-S6.

The bearings shall be of an approved type sufficient to provide as a minimum, the loading and movement capacities indicated in the Contract Documents.

Elastomer used in the bearings shall be 100% virgin polyisoprene and the physical properties shall conform to the polyisoprene requirements specified in CAN/CSA-S6, Table 11.5, Physical Properties of Polyisoprene and Polychloroprene. The elastomer compound used in the bearings shall conform to Grade 5 low temperature behaviour.

Steel laminations incorporated into the bearings shall be rolled mild steel sheets, with a minimum yield strength of 230 MPa and not less than 3 mm nor more than 5 mm in thickness.

Plain bearings shall be moulded individually or cut from previously moulded strips or slabs of the required thickness.

Laminated bearings shall be moulded as a single unit under pressure and heat in moulds that produce a smooth surface

finish. Vulcanizing or otherwise bonding rubber sheet to bearings cut from larger moldings are not acceptable.

Steel laminae shall meet the following requirements:

- All laminae and elastomer layers shall be of uniform thickness;
- Internal steel plates or laminae shall be free from sharp edges;
- Laminae shall be completely bonded on all surfaces to the elastomeric material during moulding; and
- Where pintles are specified, pintle holes shall be of such a depth as to fully engage only one lamina. Cover over pintle holes shall not be required.

The elastomeric cover on the side surfaces shall be at least 5 mm thick. The elastomeric cover of the outer layers, top and bottom, shall not be thicker than 70% of the thickness of an individual internal elastomeric layer.

Bearing pressure, compressive deflections, rotation and shear deformations shall conform to the limits as specified in CAN/CSA-S6.

Where indicated on reference bearings, all bearings shall be supplied complete with locating dowels and PVC caps. The minimum effective rubber thickness shall take into consideration the effect of dowel penetration.

The effective rubber thickness, denoted as T in CAN/CSA-S6 and T_e in Table 5.1, shall be the sum of the thicknesses of all laminates with a shape factor less than or equal to 12.

5.0 CONSTRUCTION METHODS

The Contractor shall carry out the Work as indicated in the Contract Documents and/or as specifically directed by the Engineer.

5.1 Fabrication. The fabrication of plain and steel laminated elastomeric bearings shall conform to CAN/CSA-S6.

Where pintles are specified, the depth of the pintle holes shall be such as to fully engage only one steel plate.

Each laminated bearing shall be marked with the date of manufacture and an individual alphanumeric identification. The latter shall consist of the designated identification letter of the supplier and source followed by the letter AI@ for polyisoprene and a sequential five digit number. The characters shall be not less than 10 mm high, stamped or engraved into two adjacent sides, with the indentations or protrusions not less than 1 mm in width and 1 mm in depth.

The tolerances shall be as indicated in Table 5.1

Table 5.1
Bearing Tolerances

Bearing thickness	≤ 40 mm	-0 mm to +3 mm
	> 40 mm	-0 mm to +6 mm
Bearing plan dimension		-0 mm to +6 mm
Thickness of individual layers of elastomer		± 20%
Deviation from plane parallel to theoretical surface	Top	1 in 200
	Sides	1 in 100
	Steel Laminates	0.25 T_e (Note 1)
Cover to embedded steel		± 2 mm
Pintle hole diameter		-0 mm to +2 mm
Relative position of pintle holes to each other		± 2 mm

Note 1: The tolerance of steel laminates shall be determined as follows:
(a) The distance from the base of the bearing to the bottom of every plate shall be measured. Measurements shall be taken at each corner of rectangular bearings and at the extremities of two perpendicular diameters of circular bearings.
(b) The difference between the highest and lowest measurements for every plate shall be recorded.
(c) The cumulative total of the differences recorded, expressed as a fraction of the effective rubber thicknesses of the bearing, shall be recorded.

5.2 Installation. The Contractor shall place bearings accurately with respect to the location and elevation, on level and smooth bearing surfaces, as indicated in the Contract Documents. Bearing block elevations shall be adjusted when bearing thickness varies from the reference bearing thickness shown in the Contract Documents.

The tolerances shall be as indicated in Table 5.2.

Table 5.2
Tolerance for Top of Bearing Elevations

Structure Type	Top of Bearing Elevation
Concrete Structures	+ 2.5 mm
Steel Structures	+3.0 mm
Box Girders	+2.0 mm
Deviation from level	±0.1°

6.0 QUALITY CONTROL / QUALITY ASSURANCE

7.0 METHOD OF MEASUREMENT

Supply and Installation of Elastomeric Bearings shall be measured for payment by the number of Elastomeric Bearings supplied and installed in accordance with this specification.

8.0 BASIS OF PAYMENT

Elastomeric bearings will be paid for at contract unit bid price per bearing, which price shall include supply, delivery and installation of bearings, bearing assemblies and associated items, including all labour, tools, equipment and incidentals necessary to complete the work to the satisfaction of the Engineer.

9.0 WARRANTY

SECTION 1 - DELETED

SECTION 2 - DELETED

SECTION 3 - CHAIN LINK FENCE

1.0 DESCRIPTION

Chain Link Fence includes the supply and installation of fence fabric, posts and rails, tension wires, gates and all required fittings and accessories.

2.0 REFERENCES

All reference standards shall be current issue or latest revision at the first date of tender advertisement. This specification refers to the following standards, specifications or publications:

- ASTM F1043, Standard Specification for Strength and Protective Coatings on Steel Industrial Fence Framework
- CAN2-138.1, Fence, Chain Link, Fabric
- CAN2-138.2, Fence, Chain Link, Framework, Zinc Coated Steel
- CAN2-138.4, Fence, Chain Link, Gates
- CSA A23.1, Concrete Materials and Methods of Concrete Construction
- Drawing S-2009-026
- Drawing S-2009-024
- Drawing S-2006-017

3.0 SUBMISSIONS AND DESIGN REQUIREMENTS

4.0 MATERIALS

4.1 Fence Fabric. The steel wire for Chain Link Fence shall conform to CAN2-138.1. The fabric shall be 1.8 m wide with a uniform 50 mm diamond pattern chain link mesh closed at one edge by knuckling and at the other edge by twisting to form a barb. The wire shall be Type 1 Steel Fabric Class A Grade 2 Zinc Coated 3.5 mm diameter steel wire of one of the following types:

- Steel wire, hot-dip galvanized after weaving
- Steel wire, electro-galvanized

4.2 Posts and Rails. Posts and rails shall be of Type A or Type B, at the discretion of the supplier. Type A posts and rails shall be of galvanized steel pipe, schedule 40, conforming to CAN2-138.2. Type B posts and rails shall be steel pipe conforming to ASTM F1043. Protective coatings for Type A and Type B Posts and Rails shall conform to ASTM F1043. The Dimensions of framework members shall be as shown in Table 6.3.1.

Table 6.3.1 - Dimensions of Posts and Rails

Component	Pipe Size O.D. mm	Length mm
Posts, end, corner gate and straining	89	2900
Posts, line	60	2650
Rail, top and brace	42	random

For fabric widths other than 1.83 m, the length of the posts shall be increased or decreased by the amount of the difference in fabric width.

4.3 Tension Wires. The diameter of the bottom tension wire shall be 5.0 mm or heavier, single strand galvanized steel wire.

4.4 Gates. Gates shall be supplied in accordance with the drawings in sizes defined as the distance between the inside faces of the gate posts. Gates shall be constructed from 42 mm O.D. galvanized steel pipe frames and 32 mm O.D. galvanized steel pipe braces, both conforming to the requirements of CAN2-138.4. Steel Pipe used in gates shall match that used in fence framework. All joints shall be electrically welded and hot-dip galvanized after welding, or otherwise treated by a procedure approved by the Engineer to provide equivalent protection. All gates shall be supplied with

galvanized malleable iron hinges, latch and latch catch and shall be capable of opening approximately 180°. Double gates shall have a chain hook to hold gates open and a center rest with drop bolt for the closed position. Gate latches shall be fitted for the use of padlocks which can be attached and operated from either side of the gate. Gates shall be supplied completely assembled, including the fabric. Gate fabric and installation shall be the same as for adjacent chain link fence.

4.5 Fittings and Accessories. All required fittings and accessories and galvanizing of such material shall conform to CAN2-138.2 and CAN2-138.4. All posts shall be fitted with waterproof caps designed to fit and fasten securely over the posts and carry the top rail. Fasteners for attaching fence fabric to posts, bottom wire and top rail shall be 3.5 mm diameter aluminum or galvanized steel wire or 1.5 mm stainless steel wire. Stretcher bars shall be 5 x 19 mm galvanized steel. Stretcher bar fastening bands shall be at least 3 x 19 mm galvanized steel or 5 x 19 mm aluminum.

4.6 Zinc Coating. Zinc coatings shall conform to CAN2-138.1, CAN2-138.2, CAN2-138.4 and ASTM Designation F1043.

5.0 CONSTRUCTION METHODS

5.1 Grading. Prior to the erection of the chain link security fence the Contractor shall remove any debris and correct minor ground undulations so as to obtain a smooth uniform gradient. The Contractor shall cut off at ground level, such trees, stumps and bush and remove and dispose of such logs, debris and overhanging branches as would interfere with the erection of the fence. After fence erection the Contractor shall clean and trim the site, replace sod disturbed by fencing operations, and restore the ground to a neat condition satisfactory to the Engineer.

5.2 Posts. Post spacing shall be at equal horizontal distances where possible and shall not exceed 3 m. All posts shall be placed in a vertical position and set accurately to line and position as established by the Engineer. Straining posts shall be installed at equal intervals not exceeding 150 m. Additional straining posts shall be installed as directed by the Engineer where there are appreciable changes in vertical alignment. Horizontal deflections of 10° or more shall be considered as corners and corner posts shall be installed. Posts in earth, shale, loose and friable rock, or where overburden is 600 mm or greater shall be set in concrete footings of the depth and dimensions shown in the contract drawings, even if blasting is required. In such cases, where the size of the hole exceeds the minimum dimensions of the footings as shown on the contract drawings, the Contractor shall either place the footing against undisturbed soil or shall backfill the hole with suitable earth material compacted to a density of 95% of maximum dry density or as directed by the Engineer and then bore a hole to the required minimum dimensions. In solid rock or where overburden is less than 600 mm, holes for posts shall be drilled in the rock to a minimum depth of 400 mm with a diameter of 25 mm greater than the outside diameter of the post. The annular space around the post shall be filled with either cement grout or hot poured sulphur. Posts shall be cut to the required height above ground so as to present a smooth and uniform gradient.

5.3 Concrete Footings and Concrete Gate Rests. Concrete footings and gate rests shall be rough cast in the ground and domed above grade to shed water. Concrete shall conform to CSA A23.1 for 25 MPa Concrete. Fence fabric shall not be installed until the concrete footings have cured for a period of not less than 5 days.

5.4 Bracing. End and gate posts shall be braced to the nearest line post by means of a pipe brace placed near the top of the end post and sloped diagonally to the bottom of the line post to form a brace panel. Corner and straining posts shall be supported with diagonal braces placed on both sides of the post.

5.5 Pipe Rails. Pipe rails shall be attached to the tops of the posts by means of waterproof caps which shall be fastened securely over the posts.

5.6 Tension Wire. The bottom tension wire shall be stretched tight and securely fastened to end, corner, gate or straining posts with drop-forged turnbuckles and stretcher bar bands.

5.7 Fabric. The fence fabric shall be erected such that the space between the ground and bottom of the fabric shall not be less than 40 mm and shall not exceed 80 mm. The fabric shall be stretched tight with the knuckled edge at top and securely fastened to end, corner, gate and straining posts with steel stretcher bars and steel or aluminum stretcher bar bands, spaced at 300 mm intervals. The fabric shall be placed on the side of the post nearest the roadway, except where otherwise directed by the Engineer. The fabric shall be securely fastened to the pipe rail and bottom tension wire with tie wires at 0.50 m intervals, and to the line posts at 0.35 m intervals. The tie-wires on the bottom tension wire shall have not less than 2 twists.

5.8 Gates. Both single and double gates shall be hung with the fastenings provided in conformity with the contract drawings. Gates shall be hung approximately 40 mm above the ground.

5.9 Damage to Zinc Coating. All abraded and damaged galvanized surfaces shall be cleaned and painted. Damaged areas shall be thoroughly wire brushed and all loose and cracked spelter coating removed, after which the cleaned area shall be painted with two coats of a zinc pigmented paint approved by the Engineer for this purpose.

6.0 QUALITY CONTROL / QUALITY ASSURANCE

7.0 METHOD OF MEASUREMENT

7.1 Chain Link Security Fence. Measurement for chain link security fence shall be made in metres, following the contour of the ground, of the actual length of fence erected and shall include the length of brace panels.

7.2 Gates. Measurement for gates shall be made of the actual number of openings in the fence for gates, regardless of the size and type of gate erected. Double gates shall be counted as one gate.

8.0 BASIS OF PAYMENT

8.1 Chain Link Security Fence. Payment will be made at the contract price per metre for the supply and erection of the fence, line posts, end posts, corner posts, gate posts, and straining posts regardless of the nature of the material in which the posts are set. Such payment shall be full compensation for the preparation of the site, the disposal of debris, the construction of the concrete footings, the cutting of line posts where necessary, the tying into existing chain link fences, and the restoration of the site to a neat condition all to the satisfaction of the Engineer.

8.2 Gates. Payment at the contract price per opening shall be full compensation for the supply and erection of each size and type of gate together with the necessary fittings and hardware, and including the construction of the center rest in the case of double gates all to the satisfaction of the Engineer.

8.3 Repairs. The cleaning of the damaged areas and the supply and application of paint shall be at the Contractor's expense.

9.0 WARRANTY

SECTION 4 - RIGHT-OF-WAY FENCE

1.0 DESCRIPTION

Construction of the Right-of-Way Fence includes the supply and erection of a fence composed of wooden or steel posts and galvanized wire, either in five strands unwoven or in seven strands woven mesh, with steel gates where directed, all in accordance with the plans and as specified herein.

2.0 REFERENCES

All reference standards shall be current issue or latest revision at the first date of tender advertisement. This specification refers to the following standards, specifications or publications:

- Division 6 Section 3, Chain Link Fence
- Drawing S-2009-025

3.0 SUBMISSIONS AND DESIGN REQUIREMENTS

4.0 MATERIALS

4.1 Posts.

4.1.1 Wood Posts. The posts shall be of straight and sound juniper, spruce or other approved wood material. The bark shall be entirely removed and all knots hewn flush with the face. Gate, end and corner posts shall be at least 2.2 m long and shall have a minimum top size of 175 mm diameter or 150 mm square. All other posts shall be at least 2 m long and shall have a minimum top size of 125 mm.

4.1.2. Steel Posts. The posts shall be of Type A or Type B, at the discretion of the supplier. Type A posts shall be of galvanized steel pipe, schedule 40, conforming to Standards referenced in Division 6, Section 3. Type B posts shall be steel pipe conforming to Standards referenced in Division 6, Section 3. Protective coatings for Type A and Type B Posts shall conform to Standards referenced in Division 6, Section 3. Gate, end and corner posts shall be at least 2.2 m long and shall have an outside diameter of 60 mm. All other posts shall be at least 2 m long and shall have an outside diameter of 60 mm.

4.2 Wire for Fencing and Gates. The base metal shall be of an approved commercial grade of steel wire. All wire shall be galvanized. The size of the galvanized wire shall be not less than gauge nine (9) (British Imperial Standard Wire, nominal diameter of coated wire, 3.658 mm). Seven-strand woven mesh fencing shall consist of seven longitudinal wires with vertical stay wires spaced not more than 560 mm apart. The spacings of the longitudinal wires (commencing at the bottom) shall be 150, 150, 175, 230, 255, and 255 mm or other approved spacing. Longitudinal vertical wires shall be fastened together at the intersections with approved locks. All longitudinal wires in both types of fencing shall be of coiled spring or other approved type.

4.3 Gates. Gates shall be galvanized tubular steel frames, 1200 mm high, the length to be as directed by the Engineer. The frame shall be filled with woven galvanized wire mesh consisting of six or more longitudinal wires, and of vertical wires spaced not more than 380 mm apart fastened together at all intersections as directed by the Engineer. Tubular steel braces shall be placed vertically at the third points in gates 3 m in length or longer. Corner and brace joints in the gate frame shall be so secured that the gate will retain a true rectangular shape. Each gate shall be fitted with two hinges and one latch.

4.4 Fittings and Accessories for Steel Posts. All required fittings and accessories and galvanizing of such material shall conform to Standards referenced in Division 6, Section 3. All posts shall be fitted with waterproof caps designed to fit and fasten securely over the posts and carry the top rail. Fasteners for attaching fence fabric to posts, bottom wire and top rail shall be 3.5 mm diameter aluminum or galvanized steel wire or 1.5 mm stainless steel wire. Stretcher bars shall be 5 x 19 mm galvanized steel. Stretcher bar fastening bands shall be at least 3 x 19 mm galvanized steel or 5 x 19 mm aluminum.

5.0 CONSTRUCTION METHODS

Right-of-way wire fences, Type "A" (unwoven five strand), Type "B" (woven mesh seven strand) and right-of-way fence steel gates shall be erected complete in accordance with the plans and as specified herein. All wire shall be stretched taut and all wood or steel posts set plumb and firmly embedded. Posts at grade depressions and corners wherever

directed by the Engineer shall be braced. All posts shall be placed to uniform height and the finished fence shall be true to line and rigid throughout.

6.0 QUALITY CONTROL / QUALITY ASSURANCE

7.0 METHOD OF MEASUREMENT

Right-of-way wire fences Type "A" and Type "B" and steel gates placed to the satisfaction of the Engineer shall be measured separately by the metre complete in place. The length of a gate shall be the clear opening between gate posts.

8.0 BASIS OF PAYMENT

Payment will be made for the fences and gates measured as herein specified at the contract unit prices bid per metre for Right-of-Way Wire Fence Type "A", Right-of-Way Wire Fence Type "B" and Right-of-Way Fence Steel Gates, which prices shall be full compensation for the furnishing of all materials and erection of same and all labour, equipment, tools, excavation and disposal of surplus materials and all incidentals necessary to complete the work all to the satisfaction of the Engineer.

9.0 WARRANTY

SECTION 5 - REMOVAL OF EXISTING SIDEWALKS, DRIVEWAYS AND CURBS

1.0 DESCRIPTION

This section details the requirements for removing and disposing wholly or in part, of Asphalt Concrete or Portland Cement Concrete sidewalks, curbs, driveways and curbs and gutters.

2.0 REFERENCES

3.0 SUBMISSIONS AND DESIGN REQUIREMENTS

4.0 MATERIALS

5.0 CONSTRUCTION METHODS

5.1 Cutting. Where a section of Asphalt Concrete or Portland Cement Concrete sidewalk, curb, driveway or curb and gutter is to be removed either as part of the removal of sidewalk, curb, driveway or curb and gutter, then the Contractor shall first saw cut the curb, curb and gutter, driveway or sidewalk along the lines as designated by the Engineer.

The saw cuts shall be made straight and vertical and made in such a manner that shall allow neat butt joints with future new concrete.

5.2 Demolition and Removal. Demolition and removal of sidewalks, driveways, curbs and curbs and gutters shall be carried out in such a manner and with such equipment, so as not to disturb sections that are to remain. No explosives shall be used.

5.3 Disposal of Waste Material. Waste materials shall be removed and disposed of in an approved waste disposal area provided by the Contractor at their own expense or in an area approved by the Engineer. This area shall be left in an environmentally acceptable condition.

6.0 QUALITY CONTROL / QUALITY ASSURANCE

7.0 METHOD OF MEASUREMENT

7.1 Curbs and Curbs and Gutter. Quantities for removal of Asphalt Concrete and Portland Cement Concrete Curb, and Curb and Gutter shall be by the length in metres, rounded to one decimal place, as measured along the exposed face of the curb before excavation.

7.2 Driveways and Sidewalks. Quantities for removal of asphalt concrete and portland cement concrete sidewalks and driveways shall be measured in square
metres rounded to one decimal place.

Measurements shall be made before removal and shall be the surficial area calculated as the product of the width of sidewalk times its length.

8.0 BASIS OF PAYMENT

8.1 Curbs and Curbs and Gutter. Payment for complete removal of Asphalt Concrete or Portland Cement Concrete Curbs, and Curbs and Gutter will be made at the contract unit price bid per metre which price shall be full compensation for the supply of all equipment, plant, labour and incidentals necessary to neatly saw cut, demolish, excavate, load, transport, dispose of waste material and any other incidentals necessary to complete the work all to the satisfaction of the Engineer.

8.2 Driveways and Sidewalks. Payment for complete removal of Asphalt Concrete or Portland Cement Concrete Driveways and Sidewalks will be made at the contract unit price bid per square metre which price shall be full compensation for the supply of all equipment, plant, labour and incidentals necessary to neatly saw cut, demolish, excavate, load, transport, dispose of waste material and any other incidentals necessary to complete the work all to the satisfaction of the Engineer.

9.0 WARRANTY

SECTION 6 - NON-CONING TRAFFIC PAINT

1.0 DESCRIPTION

Non-Coning Traffic Paint shall consist of the supply and application of paint to produce longitudinal pavement markings including road centerline, lane divider and edge lines as required and the supply and application of overlay-type glass beads.

2.0 REFERENCES

All reference standards shall be the current issue or latest revision at the earliest date of tender advertisement. This specification refers to the following standards, specifications or publications:

- ASTM D185, Standard Test Methods for Coarse Particles in Pigments
- ASTM D711, Standard Test Method for No-Pick-Up Time of Traffic Paint
- ASTM D868, Standard Practice for Determination of Degree of Bleeding of Traffic Paint
- ASTM D869, Standard Test Method for Evaluating Degree of Settling of Paint
- ASTM D1155, Standard Test Method for Roundness of Glass Spheres
- ASTM D1210, Standard Test Method for Fineness of Dispersion of Pigment-Vehicle Systems
- ASTM D1214, Standard Test Method for Sieve Analysis of Glass Spheres
- ASTM D1309, Standard Test Methods for Settling Properties of Traffic Paints During Accelerated Storage
- ASTM D2205, Standard Guide for Selection of Tests for Traffic Paints
- ASTM D3960, Standard Practice for Determining Volatile Organic Compound (VOC) Content of Paints and Related Coatings
- ASTM E1347, Standard Test Method for Color and Color-Difference Measurement by Tristimulus Colorimetry
- NSTIR Traffic Control Manual.
- Transportation Association of Canada, Manual of Uniform Traffic Control Devices for Canada

3.0 SUBMISSIONS AND DESIGN REQUIREMENTS

A 1 L sample of each of the yellow and white paint, in sealed air tight containers, and a 25 kg bag of the reflectorizing glass beads shall be submitted to the Department by the Contractor for testing, no later than three weeks prior to the start of work under the contract.

4.0 MATERIALS

4.1 Paint.

4.1.1 General. The paint shall have the following properties:

- Be homogeneous and the pigments well dispersed to a smooth uniform consistency
- Not skin, thicken, gel, cake or show settlement for a minimum of six months from the time of delivery
- be free of dirt and other foreign particles which may cause difficulty with spray gun or equipment at the elevated application temperatures
- Flow smoothly and evenly and completely obliterate in one coat when applied to the pavement at the intended wet film thickness
- Be flat in sheen and provide the maximum brightness and visibility with or without the overlay glass beads under daylight and artificial light
- Not darken or change in service so as to impair or change the colour and visibility of the stripes other than that caused by normal traffic wear.
- When overlay glass beads are applied at the rate of 700 g/L of paint, proper retentative anchorage shall be provided by the paint.
- Be suitable for spray application to portland cement concrete and asphalt cement concrete pavement when heated to between 70°C and 90°C.
- Dry quickly enough so that traffic cones are not required to direct vehicles from paint to avoid tracking.

4.1.2 Delivery and Packaging. The paint shall be furnished in clean, open head, 205 L drums, 18-20 gauge steel, with 8 mil disposable plastic liners. Drums shall be airtight when sealed.

Each drum shall be clearly marked with:

- Paint colour
- Name of product
- Date of manufacture
- Manufacturer code and batch number
- Manufacturer's name and address
- Safety marks as specified by the Transportation of Dangerous Goods Act and Regulations

Disposal of empty containers according to Environmental Regulations shall be the responsibility of the Contractor.

4.1.3 Properties of Non-Coning Paint. The properties of non-coning paint shall conform to the requirements listed in Table 6.6.1 and Table 6.6.2.

4.2 Glass Overlay-Type Beads

4.2.1 General. The beads shall be true spheres and their surface shall be smooth, lustrous and free from cavities and scratches. The beads shall be manufactured from glass of a composition designed to be resistant to the effects of traffic wear and weathering. No foreign material shall be contained in or among the beads.

4.2.2 Colour. The glass beads shall be colourless to the extent that they do not impart a noticeable hue to the paint.

Table 6.6.1 Water-Borne Non-Coning Traffic Paint Properties

Property	Specification		Test Method [1]
	Min	Max	
General			
Density	-	-	Method 2.1
Consistency, KU[2]	85	95	Method 4.5
Skinning Properties[3]	0	0	Method 10.1
Hiding Power, m^2/L	4.0	-	Method 14.2
	8.4		Pfund cryptometer
Coalescing Agent (2,2,4-trimethyl-1,3-pentanediol monoisobutyrate)	12		
Volatile Matter, % (including water)	-	24	Method 17.1
Pigment Content,% mass[6]	56	62	Method 21.2
100% Acrylic Polymer, % (mass)	16.25	-	Method 57.1
No-pick-up time, min[4]	1	5	ASTM D711
Fineness of grind, HU	3	-	ASTM D1210
Coarse Particles			
#60 Sieve - 250 µm	nil	nil	ASTM D185
#100 Sieve - 150 µm	-	0.01	ASTM D2205
Bleeding	4	-	ASTM D868
Settling Rate	6	-	ASTM D1309
	8	1	ASTM D869
White Paint			
Titanium Dioxide, g/L	150	-	Method 2.1, 21.1, 50.14
Reflectance	80	-	ASTM E1347
Colour	-	-	1-GP-12C-513-301
Yellow Paint			
Titanium Dioxide, g/L	75	-	Method 2.1, 21.1, 50.14
Medium Chrome Yellow, g/L	100		Method 2.1, 21.1,
PbCr04, g/L			50.14, 50.19
Reflectance	60	-	ASTM E1347
Colour	-	-	1-GP-12C 505-308 (approx)

(1) All tests to be performed by methods as per (CGSB) 1 - GP-71 or American Society of Testing and Materials (ASTM) or as noted herein.
(2) Kreb units at 25°C.
(3) Paint shall be non-skinning. (See General Requirements, 2nd paragraph)
(4) Also, field tests on a 15 mil wet film thickness of hot spray (70°- 90°) Wait one minute, drive a passenger vehicle over the film and no visible (from 15m) deposition of paint is deposited onto the adjacent pavement at an air termperature of 10°C and a relative humidity of 70%.
(5) Medium chrome yellow pigment shall have a minimum lead chromate content of 87%.

(6) Pigment Composition: 20% of the pigment content to be based on Talc (Nytol 300 or equivalent).
(7) Binder shall be FastTrack E3-127 or equivalent.
(8) Titanium Dioxide Pigment shall be rutile type and have a minimum TiO2 content of 93%.

Table 6.6.2 Low Temperature, Water Borne Non-Coning Traffic Paint Properties

Property	Specification		Test Method (1)
	Min	Max	
General			
Density	-	-	Method 2.1
Consistency, KU(2)	85	95	Method 4.5
Skinning Properties(3)	-	-	Method 10.1
Hiding Power, m^2/L	8.4	-	Pfund cryptometer #3.5 wedge
Coalescing Agent (2,2,4-trimethyl-1,3-pentanediol monoisobutyrate) % (by weight of solid polymer)	12		
Contrast Ratio	6.992	-	
VOC, g/L	-	150	ASTM D3960
Pigment Content,% of mass(10)	56	62	Method 21.2
100% Acrylic Polymer, % (mass)	16.25	-	Method 57.1
No-pick-up time, min(4)	1	5	ASTM D711
Fineness of grind, HU	3	-	ASTM D1210
Coarse Particles			
#60 Sieve - 250 µm	nil	nil	ASTM D185
#100 Sieve - 150 µm	-	0.01	ASTM D2205
Bleeding	4	-	ASTM D868
Settling Rate	6	-	ASTM D1309
	8	-	ASTM D869
White Paint			
Titanium Dioxide, g/L	150	-	Method 2.1, 21.1, 50.14
Reflectance	80	-	ASTM E1347
Colour	-	-	1-GP-12C-513-301
Yellow Paint			
Titanium Dioxide, g/L	75	-	Method 2.1, 21.1, 50.14
Medium Chrome Yellow, g/L	100		Method 2.1, 21.1, 50.14
PbCr04, g/L			50.14, 50.19
Reflectance	60	-	ASTM E1347
Colour	-	-	1-GP-12C 505-308 (approx)

(1) All tests to be performed by methods as per (CGSB) 1 - GP-71 or American Society of Testing and Materials (ASTM) or as noted herein.
(2) Kreb units at 25°C.

(3) Paint shall be non-skinning. (See General Requirements, 2nd paragraph)
(4) Also, field tests on a 15 mil wet film thickness of hot spray (70- 90). Wait one minute, drive a passenger vehicle over the film and no visible (from 15m) deposition of paint is deposited onto the adjacent pavement at an air termperature of 10°C and a relative humidity of 70%.
(5) Medium chrome yellow pigment shall have a minimum lead chromate content of 87%.
(6) Contrast Ratio: apply a wet film thickness of 381 Microns on Laneta. Penopac form (1B). Drying time: Minimum 24 hours at 23 degree Celsius ± 2 degree Celsius.
(7) Volatile Organic Compounds (VOC) (Excluding water) Max: 150g/L Method ASTM D3960.
(8) Binder shall be FastTrack XSR or equivalent.
(9) Titanium Dioxide Pigment shall be rutile type and have a minimum TiO_2 content of 93%.
(10) Pigment Composition: 20% of the pigment content to be based on Talc (Nytol 300 or equivalent).

4.2.3 Refractive Index. The index of refraction of the glass beads shall not be less than 1.50 when tested in accordance with method 49.1 of CGSB Specification 1-GP-71.

4.2.4 Roundness. A minimum of 75% by mass of the glass beads shall be true spheres. The percentage of true spheres shall be determined by one of the following methods:

- By counting the beads under 50X and 100X magnification as follows:
- Glass beads larger than #50 sieve size inclusive shall be counted under 50X magnification (see gradation requirements).
- Glass beads smaller than #50 sieve size shall be counted under 100X magnification.
- Approximately 1000 beads contained loosely in a culture dish shall be counted under reflected light for each sieve specified to determine the percentage by mass of perfectly round spheres.
- By ASTM D 1155.

Failure to meet roundness requirements by either method will be cause for rejection.

4.2.5 Imperfections. The surface of the beads shall be smooth, lustrous and free from film scratches and pits. Not more than 25% of the true spheres shall have imperfections in the form of milkiness, air inclusions, dark specks and incipient fractures. These properties shall be determined using method 149.1 of CGSB Specification 1-GP-71.

4.2.6 Gradation. The glass beads shall meet the following gradation requirements:

Table 6.6.3 - Gradation

Sieve Opening, µm	Percent Passing
850	100
600	80 - 100
300	20 - 35
150	0 - 8
75	0 - 2

Tests for gradation shall be made in accordance with ASTM Standard D 1214. The sample size shall not be less than 50 g or more than 100 g.

4.2.7 Moisture Resistance. The beads shall not agglomerate during storage and application. They shall be treated in such a manner as to overcome the effect of water, both as a vapour and a liquid, on the beads before the beads are added to the paint stripe. They shall flow freely from dispensing equipment at any time when surface and atmosphere conditions are satisfactory for painting. Moisture resistance shall be tested by the method described as follows:

A 100 g sample of glass beads shall be placed in a 500 ml beaker and an equivalent volume of distilled water shall be added to the beaker. The beaker shall then stand for 5 minutes at the end of which time the water shall be carefully poured off and the glass beads transferred to a clean dry beaker and allowed to stand for 5 minutes. The beads shall then be poured slowly into a standard 125 mm glass funnel having a stem of 125 mm length and 10 mm inside diameter.

The beads shall flow through the stem without stoppage. Slight initial agitation to start the flow through the funnel at the beginning of the test is permissible.

4.2.8 Chemical Stability. When the glass beads are exposed to atmospheric conditions, humidity, diluted acid or alkali solutions or paint film constituents, there shall be no dulling of the surface which would adversely affect reflective properties of the beads.

Calcium chloride resistance shall be determined in the following manner:

- Place 10 g of beads in a 100 ml beaker;
- Cover the sample with 500 ml of calcium chloride (1.0 Normal Solution);
- Let the beads soak for three hours;
- Rinse the beads three times with 100 ml of distilled water and dry;
- Examine the beads under a microscope and compare them with an untreated sample.

Dulling of the surface or other detrimental effects shall constitute failure of this test.

4.2.9 Packaging. The glass beads shall be furnished in clean, durable, waterproof bags containing 25 kg each. Bags shall be of one of the following types:

- Woven polypropylene, lined inside with a sprayed polyethylene coating of 0.25 mm thickness
- 10-oz jute, with polyethylene liner of 0.50 mm
- 50 lb basis weight, multi-walled kraft paper, with polyethylene liner of 0.50 mm thickness.

These bags shall be able to withstand handling and storage between packaging and application of the beads, and shall be constructed so as to avoid contamination of the beads with foreign materials. Both ends of the bags shall be securely sealed to prevent leakage.

Bags of glass beads shall be supplied on non-returnable wood pallets, 40 - 60 bags per pallet, and shall be lashed or secured to the pallet.

Each wooden pallet shall be clearly marked as to:

- Name of product;
- Date of packaging;
- Manufacturer's code and batch number;
- Manufacturer's name and address.

5.0 CONSTRUCTION METHODS

5.1 Equipment. The Contractor shall supply a highway striping truck which is capable of striping centre, lane and edge lines and of applying overlay-type glass beads to the wet painted line by means of pressurized bead dispensers. The truck shall be fitted with a paint heater capable of heating paint to any temperature up to 80ºC and maintaining a constant temperature during spraying operations.

5.2 Painting Operations. Traffic line painting shall include centerline painting, lane line painting and edge line painting.

The term centerline shall be used to describe any of the standard line combinations separating opposing traffic lanes on two-lane, two-way traffic highways and shall include the following:

- Single skip lines
- Single skip and single solid lines
- Double solid lines
- Single solid line (Occasionally a narrow local low volume road may have a single solid centerline)

All such centerlines shall be yellow in colour.

The term lane line shall be used to describe any line separating lanes of traffic travelling in the same direction and may be either a single white skip line or a single white solid line.

The term edge line shall be used to describe any line which defines the shoulder edge of the outside traffic lanes. On two-lane highways, edge lines shall be white in colour. On divided highways the edge line on the right in the direction of traffic flow shall be a single solid white line, the one on the left a single solid yellow line.

The width of painted lines shall be 11.5 cm. Paint shall be heated to a temperature sufficient to enable it to dry when applied to the road, in a time frame short enough to avoid the use of traffic cones for protection of vehicles and the painted line itself. Paint shall be applied at a rate to achieve in one pass a minimum dry film thickness (dft) of 255 µm. Overlay-type reflectorizing glass beads shall be dispensed from the paint striping truck by means of a pressurized bead dispenser to the wet painted line at the rate of 700 g/L of paint applied.

All lines are to be true with clearly defined edges and without noticeable overspray of adjacent road surfaces.

No painting shall be carried out when visible moisture is present on the road surface.

Lines not painted in accordance with these specifications shall be repainted by the Contractor at the expense of the Contractor.

TheContractor shallInformtheDepartment'srepresentativeonthejoboftheContractor'sdailyscheduletoenable the representative to be present as they deems it necessary during loading and painting operations.

5.3 Traffic Control. Traffic Control shall be the responsibility of the Contractor and shall be carried out in accordance with the NSTIR Traffic Control Manual (Latest edition).

5.4 Traffic Lines. Line markings shall be in accordance with the Transportation Association of Canada's Manual of Uniform Traffic Control Devices for Canada, Figure C-1.

6.0 QUALITY CONTROL / QUALITY ASSURANCE

6.1 Sampling and Testing Paint. A one litre sample of each of the yellow and white paint, in sealed air tight containers, and a 25 kg. bag of the reflectorizing glass beads shall be submitted to the Department by the Contractor for testing, no later than three weeks prior to the start of work under the contract. Once the Contractor has selected the paint and glass bead suppliers and the Department has approved the materials to be used, the Contractor shall be responsible for additional testing costs should they change suppliers.

6.2 Sampling and Testing Glass Beads. Samples may be taken from shipments at any time. At the discretion of the purchaser, the samples may be tested and analysed by an independent authority or otherwise. Results obtained from the analysis showing non-conformity to this specification shall be cause for rejection of all or a portion of the shipment. When the receiver rejects part or all of a shipment, any further testing requested or required by the Supplier shall be at the Supplier's expense.

7.0 METHOD OF MEASUREMENT

For purposes of payment, one line-kilometre of centerline painted is the complete centerline configuration for one kilometre of highway regardless of line configuration (single skip, single solid and single skip, double solid or single solid line). Each full kilometre of edge line painted shall be considered as one line-kilometre (maximum two line-kilometres per kilometre of highway). Each full kilometre of lane line painted, either the complete centerline configuration or edge line, shall be considered as one line-kilometre.

8.0 BASIS OF PAYMENT

The Contractor will be paid at the contract unit bid price per line-kilometre for Supply and Application of Non-Coning Traffic Paint which price shall be full compensation for all labour, materials, equipment, taxes, and any other expenses including traffic control and vehicles, for each line painted, necessary to complete the work all to the satisfaction of the Engineer.

No compensation will be paid for any traffic line painted that does not meet the requirements of this specification.

9.0 WARRANTY

SECTION 7 - CALCIUM CHLORIDE WATER SOLUTION

1.0 DESCRIPTION

This work shall consist of furnishing calcium chloride-water solutions as a surface application.

The term "Anhydrous Calcium Chloride" as used in this specification shall be interpreted to mean 100% $CaCl_2$.

2.0 REFERENCES

3.0 SUBMISSIONS AND DESIGN REQUIREMENTS

4.0 MATERIALS

4.1 Types. The Calcium Chloride water solutions shall be classified as Type A. The quantity of solution required will be as specified elsewhere in the contract.

Type A: Calcium Chloride shall be a solution having a strength of 35% ± 1% anhydrous calcium chloride.

4.1.1 Calcium Chloride. Unless otherwise provided in the Special Provisions the calcium chloride shall at the Department's option, be furnished in the form of calcium chloride flakes or calcium chloride pellets.

Calcium chloride in pellet and flake form for Type A solutions shall conform to the requirements of Calcium Chloride.

4.1.2 Water. The water used shall be clear and free from suspended matter.

4.1.3 Preparation of Solutions. To produce solutions having an approximate concentration of 35% anhydrous calcium chloride the following proportions may be used as a guide to make 4000 L of Type A solution:

- 2400 kg 77-80% calcium chloride flakes.
- 3000 kg (3000 L) water.

5.0 CONSTRUCTION METHODS

6.0 QUALITY CONTROL / QUALITY ASSURANCE

6.1 Sampling and Testing. The aqueous solution shall be sampled and tested upon delivery by using a standard hydrometer. The hydrometer reading shall be temperature corrected and shall conform to a standard reference chart supplied by the Department.

7.0 METHOD OF MEASUREMENT

Calcium chloride flake shall be measured in kilograms. Calcium chloride solution shall be measured in tonnes or as noted below.

As an alternative to weighing for measurement in tonnes, the solution may be measured by means of a metering device conforming to the Government of Canada Weights and Measures Act and Regulations thereto, and the volume of solution converted to an equivalent mass in tonnes of calcium chloride solution. A conversion factor of 1.35 kg/L shall be used in converting the volume of solution to an equivalent mass of solution. When volumetric measurement is used, the Department’s representative shall be provided with an invoice for each tank load of solution delivered. The invoice shall indicate the total litre volume of the delivery tanker and certify the actual litre volume delivered in each tank load.

8.0 BASIS OF PAYMENT

Payment for calcium chloride flake or solution shall be at the contract unit bid price per kilogram (flake) or per tonne (solution) and shall be full compensation for all labour, equipment and material necessary to complete the work all to the satisfaction of the Engineer.

9.0 WARRANTY

SECTION 8 - CALCIUM CHLORIDE

1.0 DESCRIPTION

This section details the requirements for calcium chloride to be used for dust laying stabilization, ice removal, acceleration of the set of concrete, curing of concrete, and other road conditioning purposes.

2.0 REFERENCES

All reference standards shall be current issue or latest revision at the earliest date of tender advertisement. This specification refers to the following standards, specifications or publications:

- ASTM C136, Standard Method of Test for Sieve Analysis of Fine and Coarse Aggregates
- ASTM D345, Standard Specification for Calcium Chloride

3.0 SUBMISSIONS AND DESIGN REQUIREMENTS

4.0 MATERIALS

4.1 Type. Calcium chloride shall be supplied as regular flake calcium chloride.

4.2 Chemical Composition. The calcium chloride shall conform to the following requirements as to chemical composition as detailed in Table 6.8.1.

Table 6.8.1 - Chemical Composition

Component	Min (%)	Max (%)
$CaCl_2$, %	77.0	
Total alkali chlorides (as NaCl)		3.0

4.3 Gradation. The calcium chloride shall conform to the requirements for particle size as detailed in Table 6.8.2.

Table 6.8.2 - Gradation

Sieve Size	Percent Passing (By Weight)
9 500	100
4 750	80 - 100
600	0 - 7

4.4 Packaging and Marking. The calcium chloride may be delivered in moisture-proof bags containing not more than 45.4 kg each, or in air-tight drums weighing not more than 205 kg each, or it may be delivered in bulk in tank cars, covered hopper cars, or covered trucks.

5.0 CONSTRUCTION METHODS

6.0 QUALITY CONTROL / QUALITY ASSURANCE

6.1 Sampling and Testing. The calcium chloride shall be sampled and tested in accordance with the Methods of Sampling and Testing Calcium Chloride, ASTM D 345. Every facility shall be provided the Purchaser should they elect to have their representative sample the material at the plant. If the Purchaser decides to sample the material after delivery, it shall be understood that 3% variation in content of $CaCl_2$ from that marked on each container, as required, shall be permissible.

6.2 Rejection. The calcium chloride may be rejected if it fails to conform to any of the requirements of these specifications or if it has become caked or sticky in shipment.

6.3 Sampling. A mesh lot of calcium chloride shall be sampled for testing purposes as follows:

Not less than three containers shall be selected at random from the lot. Each of the containers shall be sampled by scraping aside the top layer to a depth of approximately 20 mm and taking 500 g samples by means of a sampling thief or other method which shall insure a sample that is representative of a cross-section of the material in the container to a depth of a least 150 mm. Precautions shall be taken during the sampling operation to avoid exposing the sample unduly to atmospheric moisture. The individual samples shall be immediately and thoroughly mixed to form a representative composite sample of material, and stored in a sealed glass container.

6.4 Testing

6.4.1 Sieve Analysis. Approximately 200 g of calcium chloride weighed to the nearest 0.1 g shall be sieved in accordance with the ASTM C 136, utilizing the 10 000, 5 000 and 630 sieves together with a bottom pan and a cover (sieving shall be completed within a period of approximately 1 minute). The sieve analysis shall be reported on the basis of the grading requirements specified in Subsection 4.3 of these specifications.

6.4.2 Total Calcium. Weigh accurately in a bottle a sample of approximately 50 g (Note 1) and dissolve in distilled water. Add sufficient HCl to clear, and then dilute to 500 ml in a volumetric flask and mix thoroughly. Pipette a 50 ml aliquot into another 500 ml volume diluted to volume and mix thoroughly. Pipette a 25 ml aliquot and add enough diluted NH_4OH to make slightly alkaline to methyl orange or methyl red. Add 20 ml of cold saturated NH_4Cl solution and dilute to form 100 to 125 ml. Heat to boiling and, while stirring to precipitate the calcium, add 20 ml of cold saturated $(NH_4)_2C_2O_4$. Let stand 1 min., and if the precipitate does not show a tendency to settle well, bring back to boiling and continue the stirring. Let settle 20 min. and filter through No. 42, 110 mm. Whatman filters or paper of an equivalent grade. Wash free from oxalate and chloride with hot water. Wash the precipitate back into the original beaker and dilute to about 100 ml. Dissolve the precipitate with 10 to 15 ml of diluted H_2SO_4 (1:4) heat to about 80°C, and titrate to a pink colour with 0.1 N $KmNO_4$. Add the paper, and finish the titration to a faint pink with the standard $KmNO_4$.

- Calculation. Calculate the total calcium as percentage of $CaCl_2$, as follows:

$$\% \text{ of } CaCl_2 = \frac{\text{ml of 0.1 N } KmNO_4 \times 11.1}{\text{weight of original sample in grams}}$$

The calculated percentage of $CaCl_2$ shall be corrected for $Ca(OH)_2$ and $CaCO_3$.

6.4.3 Total Alkalinity and Magnesium Compounds. Weigh accurately a 10.00 g sample (Note 1), place in a 400 ml beaker, and dissolve in 25 ml of water. Add a drop of phenolphthalein indicator, and titrate with 0.1 N HCl until the brilliant pink colour fades or becomes a dull, slowly-returning colour when tested by adding another drop or two of indicator. Then add enough of the 0.1 N HCl in excess to give a permanent red colour after the addition of a drop of methyl orange indicator. Titrate back to the neutral point with 0.1 N NaOH and adjust to a faint colour with 0.1 N HCl. Use these solutions for the subsequent determination of magnesium compounds.

The net volume of acid used is sometimes calculated as calcium hydroxide for convenience, as follows:

- % of $Ca(OH)_2$ = ml of 0.1 N HCl x 0.0037 x 10

To the neutral solutions add 9 ml of 1 N NaOH which will precipitate $Mg(OH)_2$ along with some $Ca(OH)_2$. Filter the precipitate and transfer as much as possible to the filter. Dissolve the precipitate from the paper to the original beaker with about 10 ml of HCl (1:1). Add 30 ml of cold saturated NH_4Cl. With a volume of about 150 ml, heat to boiling and add from 50 to 60 ml (or an excess) of cold saturated $(NH_4)\ 2C_2O_4$. Heat just to boiling while stirring, and slowly make alkaline with diluted NH_4OH. Let stand 10 to 15 minutes and filter through a retentive qualitative paper such as Whatman's No. 2 or 3. Save this filtrate. Return the precipitate to the original beaker, dissolve in HCl(1:1) as before, add 15 ml of cold saturated NH_4Cl and 10 ml of the $(NH_4)_2C_2O_4$, heat to boiling, and slowly make alkaline with diluted NH_4OH. When the precipitate is well formed and settles readily, filter as before, and combine the two perfectly clear filtrates. Concentrate to about 250 ml. If much magnesium is present, the oxalate may precipitate. Add HCl to dissolve it. At a temperature of approximately 70°C, slowly add 10 ml of $(NH_4)\ HPO_4$ (15%). Add NH_4OH (sp. gr. 0.90) slowly until the precipitate is formed, then add excess. Let stand over night, stirring vigorously several times and also just before filtering. Filter through a Gooch crucible or a No. 42 Whatman paper of equivalent quality, and wash with cold NH_4OH (1:10). Ignite to constant weight and weigh as $Mg_2P_2O_7$. If the alkalinity is appreciable and the total magnesium low, this should be calculated as $Mg(OH)_2$. Any balance of magnesium over total alkalinity would be $MgCl_2$.

- Calculations. Calculate the percentage of $Mg(OH)_2$ as follows:

$$\% \text{ of } Mg(OH)_2 = \text{grams of } Mg_2P_2O_7 \times 0.524 \times 10$$

$$\% \text{ of } Mg(OH)_2 \times 34.3 = \text{ml of 0.1 N HCl due to } Mg(OH)_2$$

If the alkalinity titration with phenolphthalein was stopped and the millilitres recorded when the brilliant pink faded, the millilitres represent actual $Ca(OH)_2$ present, as follows:

$$\% \text{ of } Ca(OH)_2 = \text{ml of 0.1 N HCl} \times 0.0037 \times 10$$

The difference (millilitres for methyl orange end point minus millilitres for phenolphthalein end point) minus millilitres due to $Mg(OH)_2$ equals the millilitres due to $CaCO_3$ as follows:

$$\% \text{ of } CaCO_3 = \text{ml of 0.1 N HCl due to } CaCO_3 \times 0.0050 \times 10$$

$$\% \text{ as } CaCl_2 = (\text{ml for } Ca(OH)_2 + \text{ml for } CaCO_3) \times 0.00555 \times 10$$

Deduct this latter percentage from total calcium as net $CaCl_2$.

6.4.4 Total Alkali Chlorides as Sodium Chloride. The chlorides KCl and NaCl shall be determined together. Where it is desired to distinguish between them, the potassium may be determined by any standard method and the two reported separately. The perchlorate method may be used for this determination. For routine work the KCl and NaCl shall be reported as NaCl. The method used shall be as follows:

Dissolve an 8.000 g sample (Note 2) in 50 ml of hot water, add 1 g of reagent grade $Ca(OH)_2$, mix well, and boil gently for 1 min. Dilute to exactly 100 ml in a volumetric flask. Filter through a dry paper, discarding the first 10 ml, pipette a 25.00 ml aliquot, add 20 ml of water; heat to boiling and add 50 ml of hot $(NH_4)_2C_2O_4$ (5%) or $(NH_4)CO_3$ (4%)-preferably the latter. Dilute to 100 ml and mix well. Let stand until the temperature is about that of the room and adjust the volume. Finally, filter through a dry retentative filter paper, discarding the first 10 ml and refiltering if cloudy. Pipette a 25.00 ml aliquot in a 250 ml beaker and add 1 ml of HCl (sp.gr.1.19). Evaporate to dryness on a steam bath. Thoroughly ignite in a muffle or heat-treating furnace (Note 3) at 300 to 350EC. In about 30 min., organic and ammonium salts should have been driven off. Cool, dissolve in 10 ml of water, add 3 drops of Na_2CrO_4 or K_2CrO_4 (5%) solution as indicator, and titrate with 0.02 N $AgNO_3$ (Note 4) to a pink end point. If the ignition was correctly done, there will be but little brown or yellow colouration due to charred organic residue with seeing the end point. Run a blank on the reagents used. If this is less than 0.5 ml neglect it, if over 0.5 ml subtract from the titration after deducting 0.5 ml (1.00 ml of 0.02 N $AgNO_3$ is equivalent to 0.00117 g. NaCl). In the method as given, 0.500g of sample is finally titrated.

- Calculation. Calculate the total alkali chlorides as sodium chloride as follows:

$$\% \text{ of NaCl} = \frac{\text{ml of 0.02 N } AgNO_2 \times 0.00117 \times 1.05 \times 100}{0.500}$$

or

$$\% \text{ of NaCl} = \text{ml of 0.02 N } AgNO_3 \times 0.246$$

6.4.5 Rapid Technical Method. For ordinary purposes, where the quantity of material purchased does not warrant the employment of the foregoing method of analysis, calcium chloride will be deemed as the satisfactory if the total chlorides present, determined by titration with 0.1 N $AgNO_3$ and calculated to $CaCl_2$, is in excess of 78% and if not more than a slight precipitate of $Mg(OH)_2$ appears when a 10% filtered solution of the material is made alkaline with NH_4OH.

No material shall be rejected under this technical method of analysis, and in case the calcium chloride tested by this rapid procedure does not conform to the specifications, it shall analyzed by the methods described in Subsection 6.4.2 to 6.4.4 of this specification.

- Explanatory Notes

Note 1: If a large amount of $MgCl_2$(2 or 3%) is present, the calculation of $CaCO_3$ will be inaccurate.

Note 2: Instead of weighing separate samples as indicated in Subsections 6.4.2 to 6.4.4 a 50 g sample may be dissolved and diluted to 500 ml in a volumetric flask with distilled water. For the procedure in Subsection 6.4.2, pipette a 50 ml aliquot into another 500 ml volumetric flash and dilute to volume. From this second flask, containing 5 g of original

sample, pipette a 25 ml aliquot as indicated in Subsection 6.4.2 and continue the procedure for total calcium as outlined. For the procedure in Subsection 6.4.3, measure for alkalinity and magnesium compounds. For the procedure in Subsection 6.4.4, measure 80 ml of solution from a burette, which will represent 8 g of sample for the alkali chlorides.

This handling will render accurate distribution of the insoluble $Mg(OH)_2$ and $CaCO_3$ present more difficult than using direct weighted samples. However, if each volumetric flask is well mixed before each portion is removed, fairly accurate results can be expected. Instead of weighing accurately a 10.00 gram sample, a sample of approximately 10 grams may be used if desired, in which case the percentage of $Ca(OH)_2$ may be calculated as follows:

$$\% \text{ of } Ca(OH)_2 = \frac{\text{ml of 0.1 N HCl x 0.0037 x 100}}{\text{weight of sample in grams}}$$

Note 3: In case a muffle or furnace with close heat control is not available, a moderate bunsen flame played over the beaker may be used to volatize the ammonium and organic compounds. In this case it would be advisable to control the determination by means of a known mixture having NaCl present in the same magnitude.

Note 4: The 0.02 N $AgNO_3$ may be conveniently made by diluting 50.00 ml of exactly 0.1 N solution to a 250 ml volume. There is empirical correction to be made on the factor which amounts to the 0.02 N value being multiplied by about 1.05. This can be determined exactly by running on known mixtures having the same magnitude and composition as the calcium chloride to be analyzed.

7.0 METHOD OF MEASUREMENT

Calcium chloride flake shall be measured in kilograms.

8.0 BASIS OF PAYMENT

Payment of calcium chloride flake shall be full compensation for all labour, equipment and material required to do the work.

9.0 WARRANTY

SECTION 9 - SODIUM CHLORIDE

1.0 DESCRIPTION

This section details the requirements for the supply of sodium chloride intended for deicing roadways.

2.0 REFERENCES

- ASTM C136, Standard Method of Test for Sieve Analysis of Fine and Coarse Aggregates
- ASTM D632, Standard Specification for Sodium Chloride

3.0 SUBMISSIONS AND REQUIREMENTS

The sodium chloride shall be delivered in bags or bulk lots. The name of the Producer and the net weight shall be legibly marked on each bag or, in the case of bulk lots, on the shipping or delivery report.

4.0 MATERIALS

Sodium chloride obtained from natural deposits (rock salt) or produced by man (evaporated, solar, or other) shall meet the following requirements.

4.1 General. The material shall consist of:

- Sodium Chloride (NaCl)..... 94.0% (tolerance, -0.5%)
- Moisture Content..... 1.5% maximum

4.2 Gradation. Sodium chloride shall conform to the requirements as detailed in Table 6.9.1.

Table 6.9.1 Gradation of Sodium Chloride

Sieve Size	Percent Passing Point of Purchase	Tolerance Delivery Point
12 500	100	0
9 500	95 - 100	0
4 750	20 - 90	± 5.0
2 360	10 - 60	± 5.0
600	0 - 10	± 5.0

4.3 Condition. Sodium chloride material shall always be in a free-flowing state until used. All sodium chloride material shall be uniformly treated with an anti-caking conditioner (YPS or equivalent). The conditioner shall be uniformly applied at a minimum rate of 50 ppm by the Supplier.

5.0 CONSTRUCTION METHODS

6.0 QUALITY CONTROL / QUALITY ASSURANCE

6.1 Inspection, Sampling and Testing. Sodium Chloride under this specification shall be subject to inspection and testing. The Department or it's representative shall be provided free entry and access to the Suppliers production facilities for sampling purposes.

Samples of the sodium chloride may be taken at the point of delivery at the discretion of Department or it's representative.

Sodium chloride samples from the point of purchase shall be taken from the suppliers production line.

All sodium chloride for analysis shall be sampled in increments of three, selected at random. Each sample shall be

obtained by means of a sampling thief or other methods which will assure a representative cross section of the material.

6.2 Non-Conformance. Suppliers of sodium chloride shall provide Quality Response Reports (QRR) on Department request for materials which fail to conform to the requirements of this specification.

The Supplier's reports shall include the following:

- Name/location of person spoken with
- Description of performance problem
- Quantity of material involved
- Laboratory analysis
- Remedial action, if any.

Reports shall be forwarded for review on a monthly basis to the Department contract representative.

7.0 METHOD OF MEASUREMENT

Measurement of the Sodium Chloride shall be made on the basis of tonnes.

8.0 BASIS OF PAYMENT

Payment for delivery of sodium chloride will be made at the contract unit price bid per tonne which price shall be full compensation for all equipment, plant, labour, associated transportation costs and incidentals necessary to deliver the sodium chloride to the specified location.

9.0 WARRANTY

SECTION 10 - WINTER SAND

1.0 DESCRIPTION

This section details the requirements for the supply and delivery of winter sand used for snow and ice control as directed by the Engineer.

2.0 REFERENCES

All reference standards shall be the current issue or latest revision at the earliest date of tender advertisement. This specification refers to the following standards, specifications or publications:

- ASTM C 117, Test Method for Material Finer Than 75μm Sieve in Mineral Aggregates by Washing
- ASTM C 136, Method for Sieve Analysis Fine and Coarse Aggregates
- ASTM D 2216, Method for Laboratory Determination of Water Content of Soil, Rock, and Soil-Aggregate Mixtures

3.0 SUBMISSIONS AND DESIGN REQUIREMENTS

4.0 MATERIALS

4.1 General. Winter sand shall consist of natural or manufactured aggregate. Winter sand shall be composed of clean, hard uncoated particles and shall be free of organic matter, clay lumps and other deleterious material.

4.2 Gradation. The gradation of the winter sand shall conform to the requirements as detailed in Table 6.10.1 when tested by washed sieve analysis according to ASTM C 117 and ASTM C 136.

Table 6.10.1 Gradation of Winter Sand

Sieve Designation	Cumulative Percent Passing		
	Natural Sand	Washed Manufactured Sand	Manufactured Sand
9 500	100	100	-
2 360	65 - 95	45 - 95	-
1 180	40 - 90	20 - 90	100
600	20 - 70	15 - 70	98 - 100
475	-	-	0 - 25
300	5 - 35	5 - 35	-
236	-	-	0 - 5
150	0 - 15	0 - 15	0 - 1
75	0 - 6	0 - 6	-

4.3 Moisture Content. When delivered, the maximum allowable moisture content for winter sand shall not exceed 7%, when tested in accordance with ASTM D 2216.

5.0 CONSTRUCTION METHODS

6.0 QUALITY CONTROL / QUALITY ASSURANCE

6.1 Sampling and Inspection. Materials shall be sampled and inspected by the Department prior to stockpiling at the designated locations. This acceptance shall not preclude further stockpile sampling, which may or may not lead to rejection of the material.

The frequency of testing shall be determined by the Engineer. The number of tests shall be sufficient in number to ensure the provision of an acceptable product.

7.0 METHOD OF MEASUREMENT

The measurement for payment shall only be for those materials accepted for use under this specification.

7.1 Volume Measurement. Where the contract unit price states that winter sand is to be stockpiled and the unit of measurement as stated in the contract is in cubic metres, then such stockpiles shall be cross-sectioned and the volume computed in cubic metres rounded to the nearest whole number.

The quantity to be measured shall be the number of cubic metres of stockpiled winter sand as shown on the cross sections between the graded base of the stockpile as cross-sectioned before stockpiling and the cross sections made over the completed stockpile. The volume of this stockpile being computed by the average end area method or as wedges or pyramids, as the case may be when terminating at grade points.

7.2 Weight Measurement. Where the contract unit price states that winter sand is to be stockpiled and the unit of measurement as stated in the contract is tonnes, then the winter sand shall be weighed on scales.

The Contractor shall where required, at their own expense, provide, install and maintain such approved scales and all suitable facilities as may be required for the Department to determine accurately the weight of winter sand, loaded in each truck in tonnes, rounded to one decimal place.

8.0 BASIS OF PAYMENT

Payment for winter sand will be at the contract unit price per tonne or alternatively at the contract unit price per cubic metre for winter sand accepted and delivered and shall be full compensation for the furnishing of all materials, equipment, labour, and any incidentals necessary to complete the work to the satisfaction of the Engineer.

9.0 WARRANTY

SECTION 11 - MAGNESIUM CHLORIDE

1.0 DESCRIPTION

This section details the requirements for the supply of magnesium chloride intended for dust control and stabilization on gravel roads.

2.0 REFERENCES

All reference standards shall be current issue or latest revision at the earliest date of tender advertisement. This specification refers to the following standards, specifications or publications:

- ASTM D 1293, Test Methods for pH of Water
- ASTM D 1429, Test Methods for Specific Gravity of Water and Brine
- ASTM E 449, Test Methods for Analysis of Calcium Chloride

3.0 SUBMISSIONS AND DESIGN REQUIREMENTS

4.0 MATERIALS

4.1 Type. Magnesium chloride shall be supplied as magnesium liquid and comply with the following:

Component	Min	Max
$MgCl_2$, %	28	32
pH	4 to 6	
Specific Gravity	1.29 to 1.33	
The solution shall contain a minimum required percent by mass concentration of $MgCl_2$ as per ASTM E 449.		

4.2 Water. Water used in the solution shall be free of contaminations that could adversely affect either material performance or the environment.

4.3 Packaging and Marking. The magnesium chloride shall be delivered to the site in tank trucks for storage or applied directly by the supplier. The material shall be delivered to the specified location within 48 hours (excluding weekends) of notification. A copy of the delivery slip detailing the material and quantity (in liters) shall be provided to the Department's field representative at the time of delivery.

5.0 CONSTRUCTION METHODS

5.1 Field Application. The magnesium chloride shall be applied as directed by the Department's representative at specified locations and in a continuous manner until the work has been completed.

Material shall not be applied during periods of rain, nor if rain is expected within 12 hours of application, nor where the surface to be sprayed is in a saturated condition.

5.2 Rate of Application. Unless otherwise specified by the Department's representative, the material shall be applied in a single application at the following rates:

Component	Min. (L/m^2)	Max. (L/m^2)
28% Liquid Magnesium Chloride	1.1	1.2
32% Liquid Magnesium Chloride	1.0	1.1

5.3 Distributor. The pressure distributor shall be capable of accurately maintaining any speed required for spraying and shall be provided with the following minimum equipment:

- A pump capable of developing a constant uniform pressure in the spray bar.
- A rear or center mounted spray bar having a positive and instant shut off, which can be set parallel to the surface. The spray bar shall be at least 2.4 m wide with the ability to add extensions to spray 3.65 m wide and shall be equipped with a pressure gauge accurate to 15 kPa.
- Spray bar nozzles, shall all be of the same manufacturer and size and shall ensure uniform fan shaped spray. Nozzles shall be set in the spray bar at angles which will allow each spray pattern to overlap the other.
- A strainer installed in the feed system to prevent clogging of the spray bar and nozzles.
- A transparent standpipe located on the tank, accurately graduated in 500 liter increments.
- An electronic spray monitor or an automatic controller system readily visible and accessible to the operator and calibrated for the material being applied.

6.0 QUALITY CONTROL / QUALITY ASSURANCE

6.1 Sampling and Testing. The Department at its discretion will take one 2 liter sample (using new containers) from the middle third of the load to determine the specific gravity. Samples that do not meet the minimum specific gravity may be tested in accordance with the Methods for Analysis of Calcium Chloride, ASTM E449 to determine the magnesium concentration content.

6.2 Rejection. Magnesium chloride may be rejected if it fails to conform to any of the requirements of these specifications or if it is severely contaminated.

7.0 METHOD OF MEASUREMENT

The volume of magnesium chloride liquid shall be measured in liters.

8.0 BASIS OF PAYMENT

Payment for delivery of magnesium chloride shall be made at the unit price for each liter of material supplied, which price shall be full compensation for all equipment, plant, labour, associated transportation costs, pumping into storage tanks, and any incidentals required to do deliver and/or apply the magnesium chloride in the specified location(s), as specified in the tender documents.

9.0 WARRANTY

SECTION 12 - GEOTEXTILE

1.0 DESCRIPTION

This section details the requirements for the supply of geotextile where required by the Engineer. The geotextile shall be applied according to the Manufacturer's specifications and the Contractor is hereby advised that care shall be exercised in the placement of materials on the geotextile so as not to tear or puncture the geotextile.

2.0 REFERENCES

All reference standards shall be current issue or latest revision at the earliest date of tender advertisement. This specification refers to the following standards, specifications or publications:

- ASTM D4491 Standard Test Method for Water Permeability of Geotextiles by Permittivity
- ASTM D4595 Standard Test Method for Tensile Properties of Geotextiles by the Wide-Width Strip Method
- ASTM D4751 Standard Test Method for Determining Apparent Opening Size of Geotextile

3.0 SUBMISSIONS AND DESIGN REQUIREMENTS

4.0 MATERIALS Geotextile shall be supplied and comply with the following:

Light Weight	**Min**	**Max**
Grab Tensile, N	400	
Mullen Burst, kPa	1100	
Filtration Opening Size, µm	50	200
Hydraulic Conductivity, cm/sec	0.01	
Medium Weight	**Min**	**Max**
Grab Tensile, N	800	
Mullen Burst, kPa	2000	
Filtration Opening Size, µm	50	150
Hydraulic Conductivity, cm/sec	0.01	
Heavy Weight	**Min**	**Max**
Grab Tensile, N	1100	
Mullen Burst, kPa	3000	
Filtration Opening Size, µm	50	150
Hydraulic Conductivity, cm/sec	0.01	

5.0 CONSTRUCTION METHODS

Prior to geotextile being ordered and delivered to the site, the Contractor shall first receive approval from the Engineer. The Contractor shall provide the Engineer with certification from the Manufacturer that the material intended for use meets the requirements specified herein.

Geotextile	Typical Applications
Light Weight	Yielding subgrade Under Clear Stone Type C5
Medium Weight	Silt/clay subgrade Access road construction Under Type 2 granulars
Heavy Weight	Lining gabions Lining ditches Under large stone (>250 mm)

6.0 QUALITY CONTROL / QUALITY ASSURANCE

7.0 METHOD OF MEASUREMENT

Measurement for Geotextile shall be per square metre in place.

8.0 BASIS OF PAYMENT

Payment for Geotextile shall be at the Contract unit price per square metre in place which price shall be full compensation for the supply and installation of geotextile and shall include all equipment, labour and incidentals necessary to complete the work to the satisfaction of the Engineer.

No additional payment will be made for required overlapping of the material, as per the manufacturer's recommendations.

9.0 WARRANTY

SECTION 13 - MOBILIZATION

1.0 DESCRIPTION

Mobilization shall be defined as the loading, transportation, unloading, and complete set-up of all plant, equipment, labour, materials, and incidentals necessary to complete the work associated with the contract as well as the decommissioning, loading, transportation, unloading and storage of all plant, excess materials and equipment after the work associated with the contract is complete.

2.0 REFERENCES

3.0 SUBMISSIONS AND DESIGN REQUIREMENTS

4.0 MATERIALS

5.0 CONSTRUCTION METHODS

6.0 QUALITY CONTROL / QUALITY ASSURANCE

7.0 METHOD OF MEASUREMENT

Mobilization shall be bid as a lump sum item. The maximum bid price for Mobilization shall be established in accordance with the following table, based on the Contractor's tender value (excluding the Mobilization item) for each Project of the Contract where the bid item appears. If the unit bid price for this item is greater than the maximum allowable, the Contractor's unit bid price will be reduced to the maximum allowable. The aggregate amount of the tender will be adjusted accordingly.

Option A:

Tender Amount for Each Project (excluding Mobilization Item)	Lump Sum Bid Item (Maximum Mobilization Bid Permitted)
$0 up to $5,000,000	10% of Tender Amount (excluding Mobilization Item)
Example: Tender amount excluding Mobilization = $1,500,000	**Example: Bid at maximum 10% permitted = $1,500,000 X 0.10 = $150,000 (Aggregate Amount = $1,650,000)**
>$5,000,000	$500,000

Option B:

Tender Amount for Each Project (excluding Mobilization Item)	Lump Sum Bid Item (Maximum Mobilization Bid Permitted)
$0 up to $5,000,000	15% of Tender Amount (excluding Mobilization Item)
Example: Tender amount excluding Mobilization = $1,500,000	**Example: Bid at maximum 15% permitted = $1,500,000 X 0.15 = $225,000 (Aggregate Amount = $1,725,000)**
>$5,000,000	$750,000

Based on the complexity of the Project and at the discretion of the Construction Manager, Option A or Option B will be specified. Option B will be utilized for projects where night work is required as well as longer term projects (e.g. large structures) where repeated mobilizations and demobilizations may be necessary. For all other Projects Option A will be utilized.

8.0 BASIS OF PAYMENT

Mobilization will be paid at the Contract lump sum unit bid price (once only for each Project of the Contract in which the bid item appears), which price shall include all mobilization, de-mobilization, plant, equipment, labour, materials and incidentals necessary to complete the work to the satisfaction of the Engineer. Disbursements for this item will be issued

on progress payments in accordance with threshold percentages (25%, 50%, 75% and 100% or at the discretion of the Engineer) of aggregate tender value reached.

9.0 WARRANTY

SECTION 1 - SEDIMENT BARRIERS

1.0 DESCRIPTION

This item of work shall consist of the supply, installation, replacement and removal of sediment barriers. Sediment barriers are to be used to keep sediment, the product of erosion, on site. They shall be considered as temporary perimeter controls to intercept sediment laden sheet flow runoff before it enters a watercourse or as it leaves the construction site. They shall be considered for their ability to slow runoff velocities and impound water to allow settling and accumulation of sediment. Sediment barriers shall not be used in areas of concentrated flows.

For the purpose of this specification sediment barriers shall consist of four distinct types:

- Straw Barriers
- Silt Fence Barriers
- Berm Barriers
- Sandbag Barriers

2. 0 REFERENCES

All reference standards shall be current issue or latest revision at the first date of tender advertisement. This specification refers to the following standards, specifications or publications:

- CGSB 148.1 Method 10.2., Specification for filtration opening size of Geotextiles.
- Drawing S-2009-134.
- Drawing S-2009-132.
- Drawing S-2009-132-A.
- Drawing S-2009-133.
- Drawing S-2009-135.
- Division 7 Section 4, Maintenance and Sediment Control
- Division 7 Section 17 Bark and Compost Berms.

3.0 SUBMISSIONS AND DESIGN REQUIREMENTS

4.0 MATERIALS

4.**1 Straw Barriers.** Straw bales shall be dry, firm, tightly tied in a least two places, show no evidence of straw or tie decay, and be free of sediment. They shall be standard agriculture dimensions, approximately 600 mm x 600 mm x 1200 mm.

4.1.1 Stakes. Stakes shall be of sufficient strength to satisfy control measure performance and maintenance requirements. Stakes shall be 1.2 m in length.

4.1 Silt Fence Barriers. Silt fence barriers shall be constructed of silt fence geotextile supported on stakes.

Geotextile used for silt fence shall be woven Class 1 geotextile, having a minimum width of 900 mm. The maximum filtration opening size (FOS) shall be 840 μm.

4.1.1 Stakes. Stakes shall be of sufficient strength to satisfy control measure performance and maintenance requirements. Stakes shall be 1.5 m in length.

4.2 Berm Barriers. Berm barriers shall be constructed of earth, compost or bark or, on approval of the Engineer, a mixture of materials placed in windrows.

A mixture of materials can be manufactured on or off the project site. It must consist primarily of organic material, separated at the point of generation, and may include: shredded bark, chipped brush and stump grindings. It shall contain a mixture of particle sizes and may contain rocks less than 100 mm diameter. It shall not contain any material that inhibits vegetation establishment. The organic matter content shall be between 80 and 100% on a dry weight basis. Large amounts of silts, clays or fine sands are not acceptable in the mix. The compost, bark or mix shall be compacted sufficiently so the berm is capable of slowing and ponding sediment laden runoff.

Barrier Berms are most practical and effective on frozen ground, outcrops of bedrock and very rooted forested areas.

4.4 Sandbag Barriers. Sandbag barriers shall be constructed of three layers of sandbags. The bottom layer shall consist of 3 rows of bags, the middle layer shall consist of 2 rows of bags and the top layer shall consist of 1 row of bags.

The recommended dimension of a filled sandbag shall be approximately 150 mm x 150 mm x 450 mm.

4.5 Posts. Posts shall be tee rails of not less than 32 mm x 32 mm in cross-section dimension, 1.8 m length and 2 kg/m in mass. Posts shall be embedded not less than 300 mm. Double posts shall be installed for corner, end and straining positions. All wire fasteners and other hardware shall be in accordance with the manufacturer's recommendations.

4.6 Wire Mesh. Wire mesh shall be 14 gauge or heavier steel wire mesh in 50 mm x 100 mm weave pattern, 0.9 metre high sections with vertical stays.

4.7 Geotextile. The geotextile for wire backed silt fence shall be slit film woven synthetic fibre fabric with sewn seams and with inhibitors added to base plastic to resist deterioration by ultra-violet and heat exposure for 60 days. The geotextile fabric shall comply with the following minimum specifications and physical properties:

Grab Tensile Strength, N.	600
Mullen Burst, kPa	1800
Permitivity, $sec.^{-1}$	0.25
Apparent Opening Size, mm	0.35

5. 0 CONSTRUCTION METHODS

Sediment barriers shall be installed prior to any soil disturbance of the contributing drainage area above them. They shall be placed to intercept sheet flow in areas that can pond water, accumulate sediment and be accessible for clean out and repair.

5.1 Straw Barriers. Where straw bale barriers are to be installed on earth surfaces, the bales shall be placed in a trench measuring 750 mm wide by 150 mm deep at the location specified for the barrier. The bales shall then be staked and the remaining trench space backfilled and compacted to existing grade.

Where straw bale barriers are to be installed on sod, erosion control blanket or existing turf, they shall be placed so that there are no gaps between the bales and the underlying cover.

Straw bale ties shall not be placed in contact with the ground.

The ends of adjacent bales shall be placed tightly against one another to prevent gaps.

Each bale shall be firmly secured in place by two stakes spaced 150 mm from the end of each bale. Stakes shall be driven flush with the top of bale.

Straw barriers shall be maintained such that bales remain firm, intact, and without decay.

At each end of the barrier a 2 to 3 m section, angled upstream, shall be included to direct run-off to the main section of the barrier.

Bales shall be replaced when they are no longer functioning or as directed by the Engineer.

5.1 Silt Fence Barriers. Stakes shall be spaced a maximum of 3.0 m apart and shall be driven vertically into the ground to a depth of 500 mm.

A trench measuring 100 mm wide by 100 mm deep shall be excavated to anchor the geotextile along its entire length.

The geotextile shall be attached to the upstream side of the stakes, and shall extend into the trench a minimum of 200 mm. It shall be placed without gaps or breaks along its entire length. Where the geotextile is joined to provide a continuous run, the ends shall be securely fastened and overlapped a minimum of 500 mm.

The trench shall be backfilled and compacted to existing grade to hold the base of the geotextile firmly in place. The

completed silt fence shall have a minimum height of 600 mm above the ground surface.

At the end of the barrier a 2 to 3 m section, angled upstream, shall be included to direct run-off to the main section of the barrier.

Silt fence barriers shall be maintained vertical, without tears and without sagging.

5.1.1 Wire Backed Silt Fence. Construction of Wire Backed Silt Fence Barrier shall include the supply and installation of a fence composed of metal posts, steel wire mesh (100 mm x 50 mm mesh), and geotextile and as herein specified. The fence shall be installed with minimum disruption to the existing ground. The geotextile fabric shall be keyed into the ground a minimum of 100 mm. The geotextile shall completely cover the wire fence and the fabric shall be lapped a minimum of 300 mm.

The Contractor shall first receive approval from the Engineer, prior to ordering geotextile for delivery to the site. The Contractor shall provide the Engineer with a certificate from the manufacturer indicating that the material proposed for use meets the minimum requirements specified herein.

The Contractor shall carry out the work according to the Construction Plans, as directed by the Engineer. Prior to construction of the wire backed silt fence barrier, the Contractor shall remove any debris and correct minor ground undulations (greater than 0.3 m vertical in a 3 m length) which would interfere with the proper construction of the fence in the required location. All fence grades shall be subject to the approval of the Engineer. All posts shall be embedded vertically. Tee-rail line posts shall be embedded vertically a minimum of 1.1 m into the ground and in line at a minimum 5.0 m spacing. Double posts shall be installed at each end of the fence, whenever the fence line changes direction by more than 20º, and at changes in elevation of more than 30º. The geotextile material shall be fastened to the wire fence in an approved fashion. The geotextile fabric shall be keyed 100 mm into the ground according to the construction plans. The Contractor shall inspect the fence weekly and before and after each rain event to ensure that the fence is in good repair and properly functioning. Necessary repairs shall be made immediately.

5.2 Berm Barriers. Berm barriers must be placed along a relatively level contour. If necessary cut tall grasses or woody vegetation to avoid creating voids and bridges that would enable fines to wash under the barrier. Berm barriers shall be constructed to a minimum height of 600 mm and minimum width of 1200 mm at the bottom and a minimum of 600 mm at the top.

The upstream slope of the barrier shall be 1.5:1 maximum and the downstream slope shall be 4:1 maximum. On longer or steeper slopes, the barrier should be wider to accommodate the additional runoff.

At the end of the barrier a 2 to 3 m section, angled upstream, shall be included to direct run-off to the main section of the barrier.

Berm barriers shall be maintained at a specified height and slope without sloughing and slumping.

Berm Barriers may be permanently left in place for sediment control, then seeded or planted for the establishment of permanent vegetation.

5.3 Sandbag Barriers. The bags within each row shall be placed with the sides of the bags butted tightly against one another without gaps. The ends of sandbags in adjacent rows shall be butted tightly against each other without gaps.

The sandbags in each row shall be uniformly staggered to one another. The sandbags in each layer shall uniformly overlap the layer below.

Where sandbag barriers are to be installed on earth surfaces, a trench 150 mm deep, and sufficiently wide to accommodate three sandbags laid end to end, shall be excavated at the location specified for the barrier. The sandbags shall then be placed and the remaining trench space backfilled and tamped to existing grade.

Where sandbag barriers are to be installed on sod, erosion control blanket, existing turf, or bedrock, they shall be placed so that there are no gaps between the sandbags and the underlying surface.

At each end of the barrier a 2 to 3 m section, angled upstream, shall be included to direct run-off to the main section of the barrier.

Sandbag barriers shall be maintained with bags uniform and firmly seated.

5.4 Maintenance. Silt fences, sand bags, filter berms and socks shall be inspected immediately prior to expected rainfall, during prolonged rainfall and after each rainfall. They shall be repaired or replaced immediately if there are any signs of erosion or sedimentation below them, undercutting at the center or the edges of the barrier or if they are collecting large volumes of water behind them.

Sediment deposits should be removed when deposits reach approximately one-half the height of the barrier. Filter berms and socks should be reshaped as needed.

Before removal of the silt fence, sediment deposits remaining in place should be stabilized. Filter berms and socks may be seeded or planted for permanent vegetative cover.

6.0 QUALITY CONTROL / QUALITY ASSURANCE

All applicable legislation, without limitation, shall be complied with.

The contractor shall be responsible for meeting all conditions specified in permits. Permit conditions shall be reviewed in pre-work discussions.

The contractor shall be responsible for meeting all conditions in the site specific Erosion and Sediment Control Plan.

The Contractor shall actively seek to prevent and control all sediment on site and monitor and repair all erosion control structures used during construction.

Materials, application, and workmanship shall meet TIR specifications for sediment barriers.

7.0 METHOD OF MEASUREMENT

Measurement for Sediment Barriers shall be by the linear metre of barrier installed or replaced, from end to end, following the contours of the ground.

8.0 BASIS OF PAYMENT

- Straw Barriers
- Silt Fence Barriers
- Wire Backed Silt Fence Barriers
- Berm Barriers
- Sandbag Barriers

Payment at the contract unit price for the above tender item(s) shall be full compensation for all labour, equipment and material required to do the work including the supply and installation of erosion control blankets if barriers are removed.

Payment will be made as per Division 7 Section 1 for sediment barriers replaced if the original barriers had been properly installed or constructed and approved by the Engineer and failure was not attributable to the Contractor.

Payment will be made as per Division 7 Section 4 for sediment barriers needing repair if the original barriers had been properly installed or constructed and approved by the Engineer and failure was not attributable to the Contractor.

It will be at the discretion of the Engineer whether payment as per Division 7 Section 1 or Division 7 Section 4.

Maintenance of sediment barriers and removal and management of sediment that is accumulated by sediment barriers will be paid as per Division 7 Section 4.

9.0 WARRANTY

SECTION 2 - FLOW CHECKS

1.0 DESCRIPTION

The Contractor shall, where directed, supply, install, replace and remove flow checks. Flow checks shall be constructed across roadside drainage ditches, throughout cut sections and adjacent to the inlets and outlets of culverts to reduce the channel velocity, promote the deposition of suspended sediment and provide a trap for bed-load material.

For the purpose of this specification flow checks shall comprise three distinct types:

- Sandbag Flow Checks
- Rock Flow Checks

2.0 REFERENCES

All reference standards shall be current issue or latest revision at the first date of tender advertisement. This specification refers to the following standards, specifications or publications:

- Division 3 Section 4, Clear Stone.
- Division 7 Section 1, Sediment Barriers.
- Division 7 Section 4, Maintenance and Sediment Control.
- Drawing S-2009-136.
- Drawing S-2009-138.
- NSDOE, Erosion Control and Sedimentation Control Handbook for Construction Sites.

3.0 SUBMISSIONS AND DESIGN REQUIREMENTS

4.0 MATERIALS

4.1 Clear Stone. C2 and C5 Clear Stone as per Division 3 Section 4 of these specifications shall be used as shown on the plans or as directed by the Engineer.

4.2 Sandbag Flow Checks. Sandbag flow checks shall be constructed of three layers of sandbags.

4.3 Rock Flow Checks. Rock flow checks shall be constructed of clear stone.

5.0 CONSTRUCTION METHODS

5.1 Sandbag Flow Checks. The requirements for sandbag barriers, Division 7 Section 1, shall apply with some modifications. The ends of the flow check, at ground level, shall be higher than the top of the lowest point of the flow check.

5.2 Rock Flow Checks.

5.2.1 During Construction. During construction rock flow checks may have to be placed across a ditch or channel. Both 150 mm minus Clear Stone and 20 mm minus Clear Stone shall be piled across the ditch or channel to a height 450 mm above the lowest point of the ditch or channel.

5.2.2 After Final Grading. After final grading rock flow checks may have to be placed across a ditch or channel. Both 150 mm minus Clear Stone and 20 mm minus Clear Stone shall be piled across the ditch or channel to a height 350 mm above the lowest point of the ditch or channel.

On the downstream side of the flow check an apron shall be constructed to prevent scour. The apron shall consist of an approved erosion control blanket placed on the existing ground or 150 mm minus Clear Stone placed in a 250 mm excavated trough. In both cases the erosion control blanket or Clear Stone shall extend across the entire ditch or channel and up the side slopes to an elevation equaling the height of the flow check. The length of apron shall be between 1.5 and 2.0 m.

On the upstream side of the flow check a trough, 4000 mm (minimum) in length and equal to the width of the existing ditch or channel shall be excavated to a depth of 150 mm.

5.2.3 Overflow Weir. A level overflow weir 150 mm deep shall be formed in the top of the flow check so that it extends from the upstream to the downstream side and its crest is centered over the lowest portion of the ditch or channel. The overflow weir crest should extend 300 mm on either side of centerline.

5.2.4 Installation and Maintenance. Rock flow checks shall be installed and maintained in place, without gaps, and without undermining, to prevent sediment passage through or under the flow check.

5.3 Buffer Zones. Flow checks shall be constructed within each culvert buffer zone to the prescribed installation techniques contained in the "Erosion and Sedimentation Control Handbook for Construction Sites" Section 2.7, which states "make sure the top of the check dam (flow check) is as high as the base of the one upstream."

5.4 Ditching. Flow checks shall be constructed along any new ditching of the highway including the median at spacings to be determined by dividing 200 m by the ditch grade in percent. Flow checks are to be installed during construction and after ditches are brought to final grade.

5.5 Catch Basins. Flow checks shall be constructed around new catch basins located in the highway median.

5.6 Removal. After vegetation has established and at the direction of the Engineer, flow checks may have to be removed. If necessary, the unvegetated areas remaining, after flow checks removed, shall be covered with an approved erosion control blanket.

6.0 QUALITY CONTROL / QUALITY ASSURANCE

7.0 METHOD OF MEASUREMENT

Measurement for Flow Checks shall be by the metre or by the each for flow checks installed or replaced, measured horizontally across the top of the flow check as noted on specification drawings S-2009-136 and S-2009-138.

8.0 BASIS OF PAYMENT

- Sandbag Flow Checks
- Rock Flow Checks

Payment at the contract unit price for the above tender item(s) shall be full compensation for all labour, equipment and material to do the work.

Payment will be made as per Division 7 Section 2 for flow checks replaced if the original flow checks had been properly installed or constructed and approved by the Engineer and failure was not attributable to the Contractor.

Payment will be made as per Division 7 Section 4 for flow checks needing repair if the original flow checks had been properly installed or constructed and approved by the Engineer and failure was not attributable to the Contractor.

It will be at the discretion of the Engineer whether payment as per Division 7 Section 2 or Division 7 Section 4.

Maintenance and removal and management of sediment that is accumulated by flow checks will be paid for under Division 7 Section 4.

9.0 WARRANTY

SECTION 3 - SETTLEMENT PONDS

1.0 DESCRIPTION

The Contractor shall, where directed, construct, maintain and remove settlement ponds. Settlement ponds are to be used to intercept and retain sediment laden runoff so that sediment may settle out.

2.0 REFERENCES

All reference standards shall be current issue or latest revision at the first date of tender advertisement. This specification refers to the following standards, specifications or publications:

- Division 2 Section 3, Roadway and Drainage Excavation
- Division 2 Section 5, Borrow.
- Division 2 Section 8, Compaction.
- Division 3 Section 4, Clear Stone.
- Division 7 Section 4, Maintenance and Sediment Control.
- Drawing S-2009-139, Settlement Ponds.

3.0 SUBMISSIONS AND DESIGN REQUIREMENTS

4.0 MATERIALS

C2 Clear Stone and C5 Clear Stone as per Division 3 Section 4 of these specifications shall be used as shown on the plans or as directed by the Engineer.

5.0 CONSTRUCTION METHODS

Settlement ponds shall be built as a single control measure, consisting of an excavated and/or constructed basin, a spillway and a clear stone filter.

The excavated basin shall have a minimum depth of 1.2 m below the existing ground surface. The bottom of the excavated basin shall be horizontal and the sides of the basin shall be no steeper than 1.5:1.

If the sides of the basin are constructed the embankment material shall be impervious borrow or common material.

The inside and outside walls of the settlement pond shall be lined with C3 Clear Stone.

The top of spillway shall be constructed 300 mm below the top of the settlement pond wall.

The outside face of the spillway shall be offset 300 mm inward from the outside face of the settlement pond wall.

The inside faces of both the spillway and the settlement pond shall be flush.

At the discretion of the Engineer a temporary fence shall be erected around the settlement pond to restrict public access.

6.0 QUALITY CONTROL / QUALITY ASSURANCE

7.0 METHOD OF MEASUREMENT

8.0 BASIS OF PAYMENT

Payment for settlement ponds will be at the individual contract unit prices for Roadway and Drainage Excavation Common, Borrow, Compaction and Clear Stone.

Payment for Roadway and Drainage Excavation Common will be made as per Division 2 Section 3 for all material excavated to construct the settlement pond which shall be full compensation for all labour, equipment, and materials required to do the work, after the construction of the settlement pond has been approved by the Engineer.

Payment for Borrow will be made as per Division 2 Section 5 for all Borrow required to construct the settlement pond

which shall be full compensation for all labour, equipment, and materials required to do the work, after the construction of the settlement pond has been approved by the Engineer.

Payment for Compaction will be made as per Division 2 Section 8 for all Compaction required to construct the settlement pond which shall be full compensation for all labour, equipment, and materials required to do the work, after the construction of the settlement pond has been approved by the Engineer.

Payment for Clear Stone will be made as per Division 3 Section 4 for all Clear Stone required to construct the settlement pond which shall be full compensation for all labour, equipment, and materials required to do the work, after the construction of the settlement pond has been approved by the Engineer.

Payment will be made as per Division 2 Section 3, Division 2 Section 5, Division 2 Section 8 and Division 3 Section 4 for settlement ponds replaced if the original settlement pond has been properly constructed and approved by the Engineer and failure was not attributed to the Contractor.

Payment will be made as per Division 7 Section 4 for repair of settlement ponds if the original settlement pond had been properly constructed and approved by the Engineer and failure was not attributed to the Contractor.

It will be at the discretion of the Engineer whether payment will be as per Division 2 Section 3, Division 2 Section 5, Division 2 Section 8 and Division 3 Section 4 or Division 7 Section 4.

Maintenance of settlement ponds and the removal and management of sediment that accumulates in settlement ponds shall be paid for as per Division 7 Section 4.

9.0 WARRANTY

SECTION 4 - MAINTENANCE AND SEDIMENT CONTROL

1.0 DESCRIPTION

This item of work shall consist of the maintenance of sediment control devices and the removal and management of sediment that is accumulated by sediment barriers, flow checks and settlement ponds.

2. 0 REFERENCES

All reference standards shall be current issue or latest revision at the first date of tender advertisement. This specification refers to the following standards, specifications or publications:

- Division 7 Section 1, Sediment Barriers
- Division 7 Section 2, Flow Checks
- Division 7 Section 3, Settlement Ponds

3.0 SUBMISSIONS AND DESIGN REQUIREMENTS

4.0 MATERIALS

5.0 CONSTRUCTION METHODS

To ensure that erosion and sediment control measures are in effective working order, their condition shall be monitored prior to any forecast storm event, during a storm and following a storm event.

Sediment that is accumulated by sediment barriers, flow checks and settlement ponds shall be removed in a manner that prevents the escape of sediment to the downstream side of the control device and avoids damage to the control device. Sediment shall be removed to the level of the existing grade at the time of the control device installation.

Accumulated sediment shall be removed once it reaches a depth of one-half the effective height of the control measure or a depth of 300 mm immediately upstream of the control device.

For all control devices, accumulated sediment shall be removed as necessary to perform maintenance repairs.

Accumulated sediment shall be removed immediately prior to the removal of the control devices.

The sediment removed shall be managed as excess common excavation.

6.0 QUALITY CONTROL / QUALITY ASSURANCE

7.0 METHOD OF MEASUREMENT

Measurement for sediment control shall be by the extra work for time spent removing sediment and water.

8.0 BASIS OF PAYMENT

Payment by extra work will be full compensation for all labour, equipment, and materials and all pumping required to do the work.

9.0 WARRANTY

SECTION 5 - HYDROSEEDING

1.0 DESCRIPTION

This item of work shall consist of the supply and application of a mixture of seed, fertilizer, hydraulic mulch, binder, lime (if required), organic amendments (if required) and water in a slurry to prepared areas of exposed soil, to produce a uniform vegetative cover of grasses, nitrogen fixing clovers and wildflowers (if required).

2.0 REFERENCES

All reference standards shall be current issue or latest revision at the first date of tender advertisement. This specification refers to the following standards, specifications or publications:

- Division 7 Section 6, Dry Mulching
- Division 7 Section 7, Erosion Control Blankets
- Division 7 Section 8, Topsoil
- Division 7 Section 14, Lime

3.0 SUBMISSIONS AND DESIGN REQUIREMENTS

The Contractor shall furnish to the Engineer a statement which certifies that each bag of seed and each bag of fertilizer for use on this Project is fully labeled in accordance with the Canada *Seed Act* and *Fertilizer Act*, respectively and is at least equal to the requirements for seed listed therein. Each lot of seed and fertilizer shall be subject to sampling and testing at the discretion of the Engineer.

If compost is used, the Contractor shall provide documentation certifying the origin of the feedstocks, its class, nutrient analysis and weed free status. It shall conform to NSDEL's Compost Guidelines.

4.0 MATERIALS

All materials shall be supplied by the contractor.

SEED MIX shall consist of the *Nova Scotia Highway Seed Mix* which includes the following species:

- 40% Creeping Red Fescue
- 15% Timothy
- 15% Tall Fescue
- 10% Kentucky Blue Grass
- 10% Alsike Clover
- 5% Red Top
- 5% Perennial Rye

An equivalent mix of perennial grasses and legumes may be used as approved by the Engineer. Nitrogen fixing legumes such as Clovers, Birdsfoot Trefoil or Vetches shall be included in the mix. Any changes to the *Nova Scotia Highway Seed Mix* shall be approved by the Engineer prior to hydroseeding. Wildflower or other seed may be added as required or at the discretion of the Engineer. Nurse grasses such as winter rye and winter barley may be added in fall seedings.

The application rate for the seed mix shall be a minimum of 100 kg/ha.

Fertilizer shall be formulated 15-25-15 for seeding done April 15 to September 1st and 10-20-20 thereafter. Fertilizer shall conform to the Canada Fertilizer Act and Regulations.

The application rate for fertilizer shall be a minimum of 625 kg/ha.

Lime should added as per Division 7 Section 14, Lime.

Hydraulic mulch shall be locally procurred 100% recycled newsprint (cellulose) or wood fibre coloured green with environmentally acceptable dye. Mulch shall contain no toxic or growth inhibiting chemicals or compounds. Requests to use other products not locally produced shall be submitted to the Engineer for approval before they are used.

Hydraulic mulch shall be mixed in a hydroseeding unit with the other ingredients, and sprayed evenly and uniformly over the designated areas at a rate of 350 kg/ha.

Binder (organic tackifier) acts as an adhesive to bind soil, fiber and seed particles together and to temporarily control the effects of wind and water erosion during seed germination and plant establishment. It may be supplied in liquid or powder form and shall be applied at the Manufacturer's recommended application rate. It shall not contain any toxic or growth inhibiting chemicals or compounds.

Organic amendments to enhance germination or growth may be used at the discretion of the Engineer. This includes compost.

Water shall be free of any impurities which would inhibit seed germination or seedling growth.

Bags of seed and fertilizer shall be labeled, identifying mass (kg), mix components and percentages, date of bagging and supplier's name. Alternatives to the specified seed and fertilizer mixes will not be accepted without prior approval of the Engineer. The Engineer may sample the seed and fertilizer for analysis and verification.

Seed and fertilizer shall be kept dry and protected from sunlight, heat or other detrimental conditions. Seed or fertilizer that have been subjected to moisture before use will not be accepted for use.

5.0 CONSTRUCTION METHODS

Hydroseeding shall be carried out as soon as possible after the completion of the surface preparation. Final dressing of the slopes shall be done as areas are completed to enable hydroseeding to be done in stages as work progresses, in accordance with the Work Progression Schedule of the contract.

Hydroseeding will not be permitted on hardened or crusted soil. Final dressing of slopes shall include removal of deleterious materials such as sticks, roots or large rocks; loosening of the top 50 mm of soil; and scarification to minimize runoff velocities.

Scarifications shall be parallel to the contour of the slope with a minimum indentation (high to low) of 25 mm and at a maximum spacing of 150 mm. Scarifying can be made by means of dozer treads or any other mechanical means such that scarifications meet the above noted specifications. If topsoil is to be utilized it shall be placed in accordance with Division 7 Section 8, Topsoil.

Hydroseeding shall not be performed under windy conditions, or during periods of rainfall or severe drought, on areas covered by standing water, on frozen surfaces or under other adverse conditions, as determined by the Engineer.

The Engineer shall be given a minimum of 24 hour notice before hydroseeding is to commence.

The hydraulic mulch, seed, fertilizer, lime (if required), organic amendments (if required) and binder or tackifier shall be thoroughly mixed with water in a hydroseeding tank capable of continually agitating the mixture during the hydroseeding operation to ensure that a homogeneous slurry is produced. The hydroseed mix shall be prepared on site and applied immediately. It shall not be left in the tank for longer than 6 hours before being used.

Binder shall be used for all hydroseeding work. Application rates may vary ± 10% depending on ground conditions, at the discretion of the Engineer.

The Contractor shall proportion the ingredients in the hydroseeding tank according to the size of the tank and the area anticipated to be covered with each tankful of mix, so that the materials are applied at the prescribed rates. The Contractor shall adjust the quantities of ingredients per tankful as required if the actual coverage (m^2/tank) is different from that anticipated.

The mixture shall be applied uniformly onto prepared surfaces from a hydroseeder which shall be capable of spraying the extremities of slopes or other areas of exposed ground, whether through the towergun nozzle or extension hose. Straw or hay mulch or erosion control blankets shall be applied within 24 hours of seeding. Areas that can not be mulched or provided with an erosion control blanket within 24 hours shall not be seeded.

5.1 Maintenance. The Contractor shall maintain the seeded areas in a satisfactory condition until acceptance of the seeding by the Engineer.

6.0 QUALITY CONTROL / QUALITY ASSURANCE

Each species in the seed mix shall meet or exceed the Canadian Grade Standards for Common No. 1 seed. The seed mix shall be free of noxious weeds as defined by the *Provincial Weed Control Act* and free of species of ecological or extreme maintenance concern: Purple Loosestrife and Sweet Clover.

7.0 METHOD OF MEASUREMENT

Measurement for hydroseeding shall be the area in square metres acceptably hydroseeded using the aforementioned seed mix, fertilizer, lime, hydraulic mulch and binder, measured along the slope of the ground.

8.0 BASIS OF PAYMENT

Payment for hydroseeding at the contract unit price shall be full compensation for all labour, equipment and material necessary to perform the work.

Preparation of slopes or other areas for hydroseeding and removal of deleterious materials will not be measured for payment, but shall be considered as incidental to the bid items under which the excavation or embankment construction of such areas was carried out.

Payment for mulching over hydroseeded areas will be measured for payment as per Division 7 Section 6.

Placing Erosion Control Blanket over hydroseeded areas will be as per Division 7 Section 7.

If topsoil is used, payment for topsoil will be made as per Division 7 Section 8.

9.0 WARRANTY

SECTION 6 - DRY MULCHING

1.0 DESCRIPTION

This item of work shall consist of the supply and application of a uniform layer of locally procured straw or hay mulch on exposed soil, partially incorporating it into the soil and/or anchoring it with a tackifier or mulch binder.

Mulch is also used for stabilization of exposed soils which have been seeded.

2.0 REFERENCES

All reference standards shall be current issue or latest revision at the first date of tender advertisement. This specification refers to the following standards, specifications or publications:

- Division 1, Section 5, Environmental Protection Plan
- Division 7 Section 5, Hydroseeding
- NS Weed Control Act

3.0 SUBMISSIONS AND DESIGN REQUIREMENTS

4.0 MATERIALS

Mulch shall be supplied by the Contractor. It shall be hay or straw, in an unprocessed form such as in bales or rolls, free of noxious weeds, as defined by the Weed Control Act and other undesirable species such as those specified as having ecological or maintenance concerns, eg. Purple Loosestrife and Sweet Clover. Material should not be so wet, decayed or compacted as to inhibit even and uniform spreading. Material in processed form should be shredded straw or wood fibre packaged in plastic bags.

Requests to utilize other products shall be submitted to the Engineer for approval before product is used.

The use of locally procured hay which contains species desirable for the revegetation of the site may be preferred to straw. These species may be wildflowers and locally hardy grasses.

The mulch binder or tackifier is applied as an over-spray in an aqueous mixture onto the mulch and serves as a bonding medium. It is used to adhere the straw or hay fibres to each other to form a continuous mat on the soil surface. The tackifier shall be applied at the Manufacturer's recommended application rate, sufficient to prevent the mulch from lifting from the prepared soil surface.

Tackifier shall be used with mulch on sandy soils and on all soils on slopes steeper than 4:1 and on all mulched areas from September 1st to late fall.

The mulch binder shall not have hazardous characteristics of ignitability, corrosivity, reactivity, or toxicity in either its pre-applied or cured states. The mulch binder shall be neither a flammable nor combustible liquid. The mulch binder must not be susceptible to significant deterioration from exposure to the elements, including sunlight.

Emulsified asphalt shall not be used as a binder.

5.0 CONSTRUCTION METHODS

Mulching shall be carried out at locations identified on the Environmental Protection Plans or as directed by the Engineer, in accordance with the environmental requirements and Work Progression Schedule for the contract.

Mulch should be applied immediately following seeding to minimize the amount of exposed soil at any one time. Mulch may also be placed as temporary erosion control on unseeded areas. Anchoring of the mulch shall be done immediately after the mulch is applied by application of a binder or tackifier, or by mechanically incorporating the mulch into the soil surface.
Hay or straw shall be spread by hand or mulch blower evenly and uniformly over the designated areas at a rate of 4500 kg/ha ± 10%, after the application of a seed mix. Rough ground and steep slopes require more mulch and tackifier than finished or flatter ground and the Contractor shall adjust application rates to ensure the soil is covered with an appropriate thickness of mulch. Mulch shall not be applied in windy conditions.

The tackifier shall be applied immediately after the mulch application as an aqueous slurry. The spray shall be broadcast upwards over the previously placed hay or straw mulch at low pressures to assure a large droplet sizing. The tackifier shall not be applied during or immediately before a rain event.

Where tackifier is not used, mulch shall be mechanically incorporated into the soil surface of all mulched areas, using a mulch crimper, “sheep’s foot” roller, punch roller or by scarification with a track walking vehicle. Scarifications shall be parallel to the contour of the slope. The soil must be moist, free of stones, and loose enough to permit disc penetration to a depth of 50 mm.

Thick clumps of mulch shall be thinned and bare spots re-mulched by the Contractor. Proper application of mulch followed immediately by crimping, track walking or application of an aqueous binder will minimize these problems.

6.0 QUALITY CONTROL / QUALITY ASSURANCE

7.0 METHOD OF MEASUREMENT

Measurement for mulching shall be the area in square meters acceptably mulched.

8.0 BASIS OF PAYMENT

Payment for mulching at the contract unit price shall be full compensation for all labour, equipment and material to do the work.

The supply, mixing and application of the tackifier will not be paid separately but will be considered incidental to the work.

9.0 WARRANTY

SECTION 7 - EROSION CONTROL BLANKETS

1.0 DESCRIPTION

This item shall consist of the supply and placement of manufactured erosion control revegetative mats (ECRMs) and turf reinforcement mats (TRMs). These products are used as the primary means to stabilize and protect disturbed soil while vegetation is establishing, particularly on slopes and channels.

2.0 REFERENCES

All reference standards shall be current issue or latest revision at the first date of tender advertisement. This specification refers to the following standards, specifications or publications:

- Division 1, Section 5, Environmental Protection
- ASTM D6460-07
- ASTM D6475
- ASTM D4355
- ASTM D6818

3.0 SUBMISSIONS AND DESIGN REQUIREMENTS

The Contractor shall submit a request to the Engineer stating the specific blanket planned for use and the Manufacturer's specifications, current installation guide and other data needed to prove compliance with erosion control requirements, for that blanket. The blanket may only be used upon the approval of the Engineer. If more than one type of blanket is to be used, the location or type of usage shall also be submitted for approval.

The Contractor shall submit documentation indicating lead personnel have taken the Erosion and Sediment Control Training Course, and those installing the erosion control blankets have received training in correct placement of blankets.

4.0 MATERIALS

Erosion control blanket shall be of consistent thickness with an even fiber distribution. Blankets shall be supplied in a rolled mat form and be protected with an outer waterproof wrap bearing the Manufacturer's label indicating product name.

Testing shall be in accordance with ASTM D6460-07 and must be performed at an independent laboratory accredited by the Geosynthetic Institute's, Geosynthetics Accreditation Institute's - Laboratory Accreditation Program (GAI_LAP). Materials shall be selected by the project engineer based on the following selection criteria.

4.1 Slope Protection.

Type A - For slopes of 3:1 or less. Material shall be a single net, functional longevity of 1 year. Netting may be non-organic, photodegradable and/or biodegradable. Stitching must have the same expected degradation period as the netting.

Material must be purpose made and have a Minimum Permissible Shear Stress of 1.0lbs/ft^2.

Type B - For slopes of 2.5:1 or less. Material shall be a double net, organic, "Erosion Control Revegetative Mat", with a minimum functional longevity of 1 year. Netting may be non-organic, photodegradable and/or biodegradable. Stitching must have the same expected degradation period as the netting.

Material must be purpose made and have a Minimum Permissible Shear Stress of 1.5lbs/ft^2.

Type C - For slopes greater than 2.5:1. Material selection will be made based on velocity, shear stress, functional longevity (UV stability) and tensile strength, as determined by project engineer.

Type A - Degradable Channel Protection

A1. - Wood Excelsior Mat shall have a minimum dry weight of 334 g/m^2 in accordance with ASTM D6475, with a minimum functional longevity of 1 year. Material must be purpose made and have a Minimum Permissible Shear Stress of 1.5lbs/ft^2.

A.2 - Coconut Fiber Mat shall have a minimum dry weight of 182 g/m^2 in accordance with ASTM D6475, with a minimum functional longevity of 1 year. Material must be purpose made and have a Minimum Permissible Shear Stress of 1.5lbs/ft^2.

Type B - Permanent Channel Protection

B1. - Turf Reinforcement Mat (TRM): Minimum Permissible Shear Stress of 10.0lbs/ft^2. UV Resistance minimum of 80% @ 1000hrs ASTM D4355. Constructed of a web of mechanically or melt-bonded polymer netting or monofilaments, or fibers that are entangled to form a strong and dimensionally stable mat. Non-Woven bonding methods include polymer welding, thermal or polymer fusion, or the placement of fibers between two high-strength, biaxially-oriented nets, mechanically bound by parallel stitching with polyolefin thread. Components are to be 100% synthetic and resistant to biological, chemical, and ultraviolet degradation.

B2. - Turf Reinforcement Mat (TRM): Minimum Permissible Shear Stress of 12.0lbs/ft^2. UV Resistance minimum of 80% @ 1000hrs ASTM D4355.Constructed of a web of mechanically or melt-bonded polymer netting, or monofilaments, or fibers that are entangled to form a strong and dimensionally stable mat. Non-Woven bonding methods include polymer welding, thermal or polymer fusion, or the placement of fibers between two high-strength, biaxially-oriented nets, mechanically bound by parallel stitching with polyolefin thread. Components are to be 100% synthetic and resistant to biological, chemical, and ultraviolet degradation.

B3. - Turf Reinforcement Mat (TRM): Minimum Permissible Shear Stress of 15.0lbs/ft^2. UV Resistance minimum of 90% @ 3000hrs ASTM D4355. Minimum Tensile Strength 3000lb/ft ASTM D6818. A high performance/survivability TRM composed of monofilament yarns woven into a resilient uniform configuration. Use mats consisting of a matrix exhibiting very high interlock and reinforcement capacities with both soil and root systems and demonstrating a high tensile modulus. TRMs manufactured from discontinuous or loosely held together by stitched or glued, netting, or composites will not be allowed in this category. Components are to be 100% synthetic and resistant to biological, chemical, and ultraviolet degradation. Use this category when field conditions exist with high loading and/or high survivability requirements.

5.0 CONSTRUCTION METHODS

When blankets are used for erosion control, rocks and stumps larger than 40 mm shall be removed from the site prior to installation of the blankets. Blankets must lay flat on soil surface and not be laid over rocks and stems that would prevent blanket from contacting soil.

5.1 Blanket Placement. The placement and stapling of erosion control blanket shall follow the application of seed and fertilizer and shall be done on the same day. If soil conditions warrant immediate protection then the Engineer may direct that erosion control blanket placement and stapling precede the application of seed and fertilizer.

Blankets and staples shall be installed according to the Manufacturer's specifications.

Erosion control blankets shall be placed to form a continuous mat and be stapled in position. Erosion Control Blankets shall be overlapped or butted on all edges as per the Manufacturer's specifications. Overlap shall be in the direction of drainage flow.

At the top of a slope the erosion control blanket shall be anchored in a 150 mm deep by 150 mm wide trench. After stapling the trench shall be backfilled and compacted.

The terminal ends of blankets used in ditches and channels shall be anchored in a 150mm deep by 150 mm wide trench. After stapling the trench shall be backfilled and compacted.

For placement on slopes which are 3:1 or steeper and which are longer than twice the width of the blanket, the erosion control blanket shall be unrolled perpendicular to the top of fill slopes.

For placement in ditches, the erosion control blanket shall be unrolled parallel to the centerline of the ditch. Blankets unrolled parallel to the centerline shall extend a minimum of 1m up the front and back slopes. Longitudinal joints shall not be within 300 mm of the centerline of the ditch.

End joints of adjacent blankets shall be staggered.

5.2 Stapling. Erosion control blankets shall be stapled in position as they are placed. Staples shall be driven through the blanket and full length into the ground, perpendicular to the slope.

Stapling shall be carried out in the field as per the manufacturer's specifications.

5.3 Installation of Erosion Control Blankets Prior to Hydroseeding. The ***Work Progression Schedule*** (Div.1, Sec. 5, Item 6.0) states that the Contractor shall complete all grading work within defined "work area(s)" determined by the Contractor) to the lines and grades as shown on the plans, seeding and final slope protection within 30 days from the commencement of grubbing. However, the time between June 1st and August 1st is not conducive to the germination and establishment of hydro-seeded seed mixtures, without additional irrigation. Therefore, the Engineer may request that the Contractor stabilize the slope using ***Erosion Control Blankets*** that have sufficient open weave design that will allow the area to be hydroseeded and fertilized after the erosion control blanket has been placed.

This work area(s) would then be hydroseeded and fertilized after August 1st.

6.0 QUALITY CONTROL / QUALITY ASSURANCE

The Contractor and the Engineer shall work cooperatively within their respective responsibilities to assure a high quality project.

The blankets are installed in a timely and correct (according to the Manufacturer's specifications) manner that the erosion of disturbed ground is prevented.

All phases of the work comply with federal and provincial legislation.

7.0 METHOD OF MEASUREMENT

Measurement for erosion control blanket shall be the area in square metres acceptably installed and in place, measured along the slope of the ground. No additional payment will be made for blanket overlap.

8.0 BASIS OF PAYMENT

- Turf Reinforcement Mats, Type A
- Turf Reinforcement Mats, Type B
- Turf Reinforcement Mats, Type C
- Degradable Channel Protection, Type A1, Wood Excelsior Mat
- Degradable Channel Protection, Type A2, Coconut Fiber Mat
- Permanent Channel Protection, Type B1, Turf Reinforcement Mat
- Permanent Channel Protection, Type B2, Turf Reinforcement Mat
- Permanent Channel Protection, Type B3, Turf Reinforcement Mat

Payment at the contract price for the above tender item(s) shall be full compensation for all labour, equipment and material to do the work.

9.0 WARRANTY

SECTION 8 - TOPSOIL

1.0 DESCRIPTION

This item of work shall consist of the supply and placement of a soil material of suitable quality over an area to be stabilized by establishing permanent vegetation by seeding. This material, herein referred to as Topsoil may be derived from:

- Soils from the construction site to which amendments may or may not be added to provide a good growing medium for a seeding operation.
- Soils brought in from other sites to which amendments may or may not be added to provide a good growing medium for a seeding operation.
- Subsoils where the texture, organic matter, pH and nutrient content can be modified by reasonable means to provide for adequate plant growth.

The Contractor shall, where directed, salvage topsoil (the top layer of natural soil which supports vegetation) during the grubbing operation, stockpile this and place on areas designated by the Environmental Construction Plans and/or by the Engineer.

2.0 REFERENCES

All reference standards shall be current issue or latest revision at the first date of tender advertisement. This specification refers to the following standards, specifications or publications:

- Division 2 Section 3, Roadway and Drainage Excavation
- ASTM D 4972, Test Method for pH of Soil
- ASTM D 2974, Test Method for Moisture, Ash and Organic Matter of Peat and other Organic Materials
- Landscape Nova Scotia Horticultural Trades Association; Topsoil Specifications and the Soil and Compost Use Guidelines.

3.0 SUBMISSIONS AND DESIGN REQUIREMENTS

3.1 Soil Analysis. Prior to application of the topsoil, the Contractor shall take soil samples of all soils to be seeded, and/or soils to be blended to provide an adequate seeding media. Soil~~s~~ samples for testing shall consist of approximately 500 ml of material that is a composite of a minimum of 20 individual samples taken randomly from soils that appear uniform in colour and texture. The samples shall be submitted to a qualified Consultant for soil chemical and textural analysis to be performed at an approved laboratory. The results shall be submitted to the Project Engineer for approval prior to topsoil application.

4.0 MATERIALS

The topsoil medium shall be of a loam, silt loam or clay loam texture with sufficient water and nutrient retention capabilities to support turf grasses.

The topsoil medium shall be free draining and shall be free from subsoil, woody vegetation, stumps, roots or other debris that would prevent proper placement of the soil. It shall be free from stones, clay lumps or similar objects larger than 75 mm in greatest dimension. Sod and herbaceous growth such as grass and weeds need not be removed but shall be thoroughly broken up and mixed with the soil during handling operations. The soil material shall be free of noxious weeds and free from any material toxic to plant growth. The material shall also conform to the following pH and organic content requirements:

4.1 pH (Acidity). Topsoil, when tested in accordance with ASTM D 4972, shall have a pH between 5.5 and 7.6. When the topsoil has a pH value less than 5.5, it shall be enhanced by applying pulverized limestone (Division 7 Section 14) at a rate necessary to attain a pH value of 6.0.

4.2 Organic Content. Topsoil, when tested in accordance with ASTM D 2974, shall have a minimum organic content (Percentage of Dry Weight) of 5% and no more than 20% organic content. When the topsoil organic content is less than 5%, it shall be enhanced at a rate necessary to attain this minimum organic content.

One or more of the following soil amendments may be used:

4.2.1 Horticultural Peat Moss shall be a processed all organic product, with a minimum pH of 3.0, a water holding capacity of 20 times its weight, reasonably free of wood and other extraneous matter, and shall contain no weed seed or any impurities that would interfere with plant germination and growth. Peat Moss contains no plant nutrients.

4.2.2 Compost to be used as a soil amendment shall meet the requirements of Division 7 Section 16 and may be used up to 25% by volume to soils low in organic matter and/or soils with high quantities of sand or clay. It provides organic matter, plant macro and micro nutrients and improves soil texture.

4.2.3 Organic muck that has been salvaged from anaerobic marshes and bogs that is free of harmful chemicals or substances may be used to amend low organic matter soils after a soil analysis indicating its organic content and pH has been performed.

4.2.4 Manure that is well rotted and free of harmful chemicals or substances may be used.

4.2.5 Rotted bark free of harmful chemicals or substances may be used.

4.3 Fertilizer. Fertilizer shall be complete, non-toxic, and non-burning and meet the requirements as stated in the laboratory analysis for NPK.

5.0 CONSTRUCTION METHODS

Wherever native plant growth will not interfere with site lines, grading or future maintenance activities such as mowing, the native soils and vegetation shall be left in place on the construction site, and disturbed as little as possible after the clearing.

Topsoil that is to be salvaged shall be removed from construction surfaces and stockpiled when directed by the Engineer. If space within the right of way is not available for stockpiling of topsoil, the Contractor shall provide suitable areas elsewhere for the duration of the contract. Topsoil shall be stockpiled is such a manner that: slopes shall not exceed 2:1 (H:V), natural drainage is not obstructed and that no sediment shall leave the site. If stockpiles are to be left in place for an extended period they shall be seeded with an annual grass mixture or covered with a hay or straw mulch.

Where required, the sub-grade shall be raised to rough grade levels with landscape fill, deposited in layers not exceeding 200 mm.

Areas where the addition of topsoil is required shall be graded to a uniform surface eliminating uneven areas and low spots to ensure good drainage, and shall be free of vegetation, debris and stones which would interfere with the efficacy of the erosion control blanket or, not be covered by the specified depth of topsoil.

After the Engineer has inspected and approved the sub grade, the topsoil shall be spread to a uniform minimum depth of approximately 100 mm - 150 mm ± 25 mm on designated areas. Topsoil shall not be placed and distributed while frozen or muddy or when the sub-grade is frozen or excessively wet. After grading, the soil shall be in a loose friable condition and the surface shall meet contours and elevations indicated on the drawings, or as directed by the Engineer.

Soil amendments to enhance the establishment of vegetation may be added and mixed into the topsoil either before spreading or after spreading but prior to final grading.

Fertilizer type and rate as determined by the soil analysis may be applied as part of the hydro-seeding operation or may be applied prior to broadcast seeding or sodding by uniformly spreading it over the entire area of topsoil and loosely worked into it the surface.

6.0 QUALITY CONTROL / QUALITY ASSURANCE

The Contractor shall accomplish the work in an orderly progression to minimize the time topsoil is stockpiled before re-use.

The Contractor or sub-contractor (Consultant) shall demonstrate knowledge of basic horticultural and erosion control principles for establishing vegetation, and be trained and experienced in the skills necessary to meet the performance requirements of the Contract.

Use of topsoil and recommended amendments to grow quality coarse turf shall be based on the soil analyses from a qualified laboratory.

7.0 METHOD OF MEASUREMENT

Where topsoil is to be drawn from stockpiles built by the Contractor or from existing stockpiles designated in the contract and placed, measurement shall be made in square metres of surface covered, measured along the slope of the ground.

8.0 BASIS OF PAYMENT

Payment for topsoil will be at the contract unit price per square metre for a specified depth which shall be full compensation for all labour, equipment and materials (including pulverized limestone, peat, compost material) necessary to do the work.

The salvaging and stockpiling of topsoil obtained on site will not be measured for payment but shall be considered as incidental to Division 2 Section 3.

The costs incurred by the Contractor for handling, stockpiling and transporting topsoil will be considered as incidental to the work.

9.0 WARRANTY

During the duration of the Contract any areas showing erosion shall be repaired to prevent the loss of sediment from the construction site.

SECTION 9 - WATER CONTROL FOR BRIDGE FOUNDATIONS

1.0 DESCRIPTION

This item of work shall consist of the dewatering and control of water for the purpose of placing bridge foundation concrete in the dry.

All work necessary to remove sediment when dewatering shall be the responsibility of the Contractor and at the discretion of the Engineer.

2.0 REFERENCES

All reference standards shall be current issue or latest revision at the first date of tender advertisement. This specification refers to the following standards, specifications or publications:

- Division 7 Section 12, Dewatering with Filter Bags

3.0 SUBMISSIONS AND DESIGN REQUIREMENTS

4.0 MATERIALS

Filter Bags shall conform to the requirements for Filter Bags as per Division 7 Section 12 of these specifications.

5.0 CONSTRUCTION METHODS

Dewatering shall include the construction of cofferdams, where necessary, as well as pumping, which may involve the use of Filter Bags.

All work necessary to remove sediment when dewatering shall be the responsibility of the Contractor and at the discretion of the Engineer.

6.0 QUALITY CONTROL / QUALITY ASSURANCE

7.0 METHOD OF MEASUREMENT

Measurement for Water Control For Bridge Foundations shall be by the contract lump sum price necessary to complete work.

8.0 BASIS OF PAYMENT

Payment for Water Control for Bridge Foundations shall be full compensation for all costs of labour, plant, tools, equipment, materials (including filter bags), cofferdams, pumping and incidentals necessary to complete the work to the satisfaction of the Engineer.

9.0 WARRANTY

SECTION 10 - TURBIDITY CURTAIN

1.0 DESCRIPTION

This item of work shall consist of the supply, installation, maintenance and removal of turbidity curtains.

2.0 REFERENCES

All reference standards shall be current issue or latest revision at the first date of tender advertisement. This specification refers to the following standards, specifications or publications:

- ASTM D 4632, Grab Tensile Strength.
- ASTM D 4751 Apparent Opening Size
- ASTM D4533 Trapezoidal Tearing Strength
- ASTM D3786 Bursting Strength
- ASTM D4491 Permittivity
- Drawings S-2009-137 and S-2009-140.

3.0 SUBMISSIONS AND DESIGN REQUIREMENTS

Product data to be approved by Project Engineer.

4.0 MATERIALS

Turbidity curtains shall consist of turbidity curtain geosynthetic, load line, floatation, ballast, anchors, mooring buoys, mooring lines, adjustment lines, and tie-downs.

4.1 Geosynthetic Properties. Turbidity curtain geosynthetics shall be a non-woven needle punched fabric having the following properties: (all values are Minimum Average Rolling Values (MARV))

Grab Tensile Strength	800 N
Mullen Burst	2250 kPa
Trapezoidal Tear	333 N
Apparent Opening Size (AOS)	0.212 mm
Permittivity	1.50 s

4.2 Floatation. Turbidity curtain floatation material shall be a material which has sufficient buoyancy to provide the curtain with continuous support, and a minimum of 100 mm freeboard. The sections of floatation shall be installed such that they can not move along inside the sleeve and they shall not be more than twice the thickness of the floatation apart. Buoyancy cross section shall be a minimum of 300 cm^2.

4.3 Load Lines. Load lines shall be minimum 8 mm steel cable.

4.4 Ballast. Ballast shall be minimum 8 mm steel chain.

4.5 Anchors. Bottom anchors must be sufficient to hold the curtain in the same position relative to the bottom of the watercourse, without interfering with the action of the curtain. The anchor may dig into the bottom (grappling hook, plow or fluke-type), or may be weighted (mushroom type), and should be attached to a floating anchor buoy via an anchor line. The anchor line would then run from the buoy to the top load line of the curtain.

4.6 Mooring Buoys. Mooring buoys shall have provision for the mooring line to be securely attached and be sufficiently buoyant to remain afloat under normal load conditions.

4.7 Mooring Adjustment Lines. Adjustment lines shall be minimum 13 mm nylon rope.

4.8 Mooring Lines. Mooring lines shall be minimum 8mm steel cable.

5.0 CONSTRUCTION METHODS

5.1 Turbidity Curtains. Turbidity curtains shall be constructed as follows:

- The turbidity curtain shall have sleeves formed along the top and bottom edges. The top sleeve shall contain the load line and the floatation, and the bottom sleeve shall contain the ballast.
- Where the turbidity curtain is joined to provide a continuous run, the sections shall be connected to provide a continuous seal.
- The turbidity curtain shall be of sufficient width taking into account water depth and wave action.
- Adjustment lines, when required, shall be used at 10 m intervals maximum and encircle the turbidity curtain from top to bottom.
- The turbidity curtain shall be prepared for installation by rolling up and binding with ties every 1.5 m for the entire length of curtain.

5.2 Installation

Turbidity curtains shall be installed as follows:

- Anchor locations shall be established by the installer as necessary to maintain the turbidity curtain in place. The number and size of the anchors and their location to be determined by the size of the curtain and its location (sheltered or exposed) and the duration for which it will be deployed.

Turbidity curtains shall be installed to prevent sediment passage from the area enclosed by the curtain to the remaining water body. Turbidity curtains shall only be installed and maintained in a manner that avoids entry of equipment, other than hand-held equipment and boats, to the remaining water body. The sequence of installation shall be as follows:

- One end of the curtain shall be firmly attached to the upstream tie-down.
- The curtain shall be launched and placed as specified.
- The remaining end of curtain shall be attached to the downstream tie-down.
- Each anchor shall be attached to the turbidity curtain load line with a mooring line.
- At inflection points, the mooring buoys shall be attached to the mooring line at a distance 1 m from the load line
- The ties, if used, shall be removed from the curtain to allow the turbidity curtain ballast to sink to its maximum depth.

The location and depth of the ballast shall be adjusted as necessary by using the adjustment lines.

Equipment is permitted to work in the area enclosed by the turbidity curtain.

The curtain shall be kept free of tears and gaps and the bottom edge of curtain shall be continuously in contact with the water course bed so that sediment passage from the enclosed area is prevented. The entire top edge of the curtain shall be maintained such that it is always above the water surface.

6.0 QUALITY CONTROL / QUALITY ASSURANCE

Under certain conditions the Department may require independent certification for proper installation as outlined in Special Provisions for the Project.

7.0 METHOD OF MEASUREMENT

Measurement for turbidity curtains shall be by the metre of geosynthetic curtain installed.

8.0 BASIS OF PAYMENT

Payment at the contract unit price for the above tender item shall be full compensation for all labour, equipment and material required to do the work. Partial payment will be made on the following basis:

- 70% for installation
- 30% for maintenance and removal

9.0 WARRANTY

SECTION 11 - WATER CONTROL AT CULVERT EXTENSIONS OR INSTALLATIONS

1.0 DESCRIPTION

This item of work shall consist of the dewatering and control of water for the purpose of installing culverts and extending culverts in the dry. Work shall be in accordance with the Nova Scotia Watercourse Alteration Specifications and the conditions of this specification.

2.0 REFERENCES

All reference standards shall be current issue or latest revision at the first date of tender advertisement. This specification refers to the following standards, specifications or publications:

- Division 3 Section 4, Clear Stone.
- Division 7 Section 12, Dewatering with Filter Bags.
- Nova Scotia Watercourse Alteration Specifications (1993)

3.0 SUBMISSIONS AND DESIGN REQUIREMENTS

4.0 MATERIALS

C1 Clear Stone as per Division 3 Section 4 of these specifications shall be used as shown on the plans or as directed by the Engineer.

Filter Bags shall conform to the requirements for Filter Bags as per Division 7 Section 12 of these specifications.

5.0 CONSTRUCTION METHODS

5.1 General

Water control for culvert installations or extensions shall be carried out using one of the following methods:

- constructing a temporary plastic, geotextile or stone rip rap lined diversion or
- pumping the stream flow around the site.

The following two conditions shall be satisfied and approved by the Engineer before any work on the installation or extension of culverts can commence:

- The Contractor shall install a geotextile silt fence across the right-of-way on both sides of the watercourse to delineate a minimum buffer zone of 75 m or as directed by the Engineer.
- The Contractor shall construct sediment traps at the ends of the culvert or culvert extension to the dimensions indicated on the Environmental Construction Plan.

Other requirements are as follows:

- No grubbing or filling is to take place until the drainage structure and the erosion control devices are installed.
- Access roads or working areas within the buffer zone shall be constructed of rock fill. If a common fill is used then all exposed surfaces shall be covered concurrently with 200 mm minus Clear Stone.

5.2 Temporary Diversions

If a temporary plastic, geotextile or stone rip rap lined diversion is to be constructed then the following procedures shall be adhered to:

- Excavate diversion channel leaving earthen plugs at both ends. Line diversion channel with plastic, geotextile or uniformly-graded stone rip rap material in accordance with Clause C16 in the "Culverts" section of the Nova Scotia Watercourse Alteration Specifications.
- Open downstream plug and allow water pressure to equalize in the stream diversion.

- Open upstream plug and allow water to flow through both the existing stream channel and the new stream channel.
- Immediately place a non-erodible dam in the upstream end of the existing channel. Dam to consist of a plastic faced sand bag cofferdam.
- Immediately install a non-erodible dam downstream to prevent back flow into the construction site. Construct a settlement pond and pump out the existing dammed-off stream channel. All water from the existing channel must be filtered before entering the live stream by means of the settlement pond or some other procedure approved by the Engineer.
- Construct drainage structure and complete all channel work.
- Remove the settlement pond and remove downstream dam.
- Remove upstream dam. Fill in upstream and downstream ends of temporary stream diversion with non-erodible material.
- Fill in remainder of stream diversion and stabilize.

6.0 QUALITY CONTROL / QUALITY ASSURANCE

7.0 METHOD OF MEASUREMENT

Measurement for water control shall be by the lump sum price for the dewatering and control of water necessary to install or extend culverts in the dry.

8.0 BASIS OF PAYMENT

Payment for water control will be at the contract lump bid sum price which price shall be full compensation for all water control associated with pumping the stream flow around a site or for constructing a temporary diversion channel. This work shall include the excavation and in-filling of diversion channel and settlement pond, the supply and placement of channel lining, the supply, placement and removal of sandbag cofferdam and the non-erodible dam, and all necessary pumping including the supply of filter bags (if required). 200 mm minus Clear Stone, will be weighed and payment will be as per Division 3 Section 4.

9.0 WARRANTY

SECTION 12 - DEWATERING WITH FILTER BAGS

1.0 DESCRIPTION

This item of work shall consist of all work necessary to remove sediment when dewatering an excavation by pumping water into Filter Bags.

2.0 REFERENCES

All reference standards shall be current issue or latest revision at the first date of tender advertisement. This specification refers to the following standards, specifications or publications:

- ASTM D 4632, Test Method for determining grab tensile strength.
- ASTM D 4751, Test Method for Determining the Filtration Opening Size (FOS) of Geosynthetic.
- Division 7 Section 9, Water Control for Bridge Foundations
- Division 7 Section 11, Water Control at Culvert Extensions or Installations.

3.0 SUBMISSIONS AND DESIGN REQUIREMENTS

4.0 MATERIALS

Filter Bags shall comprise a geosynthetic main body complete with a hose connection apparatus.

4.1 Body Material. Filter Bags shall have the following properties:

- A grab tensile strength that meets the specifications outlined in ASTM D 4632
- Be a spunbound needle punched fabric between 8 and 16 oz. or woven material such that the hole size can not enlarge under pressure or by being snagged.
- A filtration opening size that meets the specifications outlined in ASTM D 4751.

4.2 Hose Connection. The connection shall be adjustable to accept different size discharge hoses.

4.3 Thread. The main body shall be sewn with CSB heavy duty nylon thread.

4.4 Stitching. The stitching shall conform with the following requirements:

- The center seam of the main body shall be sewn with 4 rows of lockstitch 301.
- The hose connector shall be sewn to the main body with 6 rows of lockstitch 301.

5.0 CONSTRUCTION METHODS

Bags shall be raised off the ground by placing on wooden pallets. If this is not possible then bags shall be placed on bedding approved by the Engineer. In all cases the location of the Filter Bags during the dewatering operation will be at the discretion of the Engineer.

It may be necessary to use multiple bags with a manifold on the discharge hose (especially if smaller bags are used) for long term use or for large variations in flow rates.

Bags shall be emptied and collected material disposed of in an area selected by the Contractor and approved by the Engineer. If material is contaminated the Contractor shall ensure that disposal of material meets the requirements of the Dangerous Goods Management Regulations.

Bags may be restitched and reused at the discretion of the Engineer.

6.0 QUALITY CONTROL / QUALITY ASSURANCE

7.0 METHOD OF MEASUREMENT

Measurement for Dewatering Filter Bags shall be by the lump sum price for dewatering the excavation specifically denoted on the contract drawings and described in the Special Provisions.

8.0 BASIS OF PAYMENT

Payment will be at the lump sum contract price which shall be full compensation for the supply of all pumps and all operating and maintenance costs associated with pumping necessary for dewatering the excavation, for the supply of all Filter Bags, clean-out and disposal of collected sediment to the requirements noted in this specification, and the supply and installation of all appurtenances (if multiple bags used) which price shall include all materials, labour and equipment necessary to do the work to the satisfaction of the Engineer.

The fabric weight and size of main body (length and width) of the Filter Bags and the number of Filter Bags required to do the work shall be the responsibility of the Contractor. The heavier the fabric the smaller the filtration opening size, FOS.

9.0 WARRANTY

SECTION 13 - SODDING

1.0 DESCRIPTION

This item of work shall consist of the supply and placement of all materials necessary for the preparation and the sodding of the side slopes of the approach fills, at the end bents of structures, medians, boulevards, between curb and sidewalk, or other areas as indicated on the plans and/or as directed by the Engineer.

2.0 REFERENCES

All reference standards shall be current issue or latest revision at the first date of tender advertisement. This specification refers to the following standards, specifications or publications:

- Canadian Nursery Trades Association; Section 17, Canadian Standards for Nursery Stock.
- Division 7 Section 8, Topsoil.

3.0 SUBMISSIONS AND DESIGN REQUIREMENTS

4.0 MATERIALS

4.1 Topsoil. Topsoil shall conform to the specifications found in Division 7 Section 8 of these specifications.

4.2 Sod. Sod shall be cultivated turf grass containing not less than 40% Kentucky Bluegrass and shall be free of weeds and having no surface soil visible when mowed to a height of 50 mm. The soil portion shall be of uniform thickness of not more than 15 mm and conform to Section 17 of the Canadian Standards for Nursery Stock.

4.3 Pegs. Pegs shall be wood with a nominal size of 25 mm x 25 mm x 200 mm.

4.4 Mesh. Mesh shall be 37 mm chicken wire or plastic mesh.

5.0 CONSTRUCTION METHODS

The Contractor shall grade the side slopes to the lines indicated on the plans or as directed by the Engineer and shall check the slope utilizing a template, line or other means to insure a uniform slope. The Contractor shall rake the slopes and place at least 75 mm of approved topsoil under the sod. Lime shall be spread on the topsoil at the rate of 0.25 kg/m^2 and 6-12-12 fertilizer at the rate of 0.15 kg/m^2.

The sod shall be laid and tamped to a uniform and even surface with broken joints and shall be well watered at least twice a day for seven days after laying and shall be watered for an additional 14 days as required to ensure growth at the end of this period. Sodding on slopes shall be suitably pegged with wooden pegs and provided with wire mesh if and where directed. Any sod which shows signs of settlement shall be cut out and replaced at the Contractor's expense. All excess earth, stones or other debris shall be removed by the Contractor when sodding is completed.

6.0 QUALITY CONTROL / QUALITY ASSURANCE

7.0 METHOD OF MEASUREMENT

The quantity to be paid for shall be the area in square metres of accepted growing in place sod as determined by measurements made along the surface contours of the ground.

8.0 BASIS OF PAYMENT

Payment for sodding will be made at the contract unit price per square metre for Sodding, which price shall include the supplying and placing of topsoil sod, pegs, stakes, wire, pegging, tamping, lime, fertilizer, sprinkling, and all incidentals necessary to complete the work all to the satisfaction of the Engineer.

9.0 WARRANTY

SECTION 14 - LIME

1.0 DESCRIPTION

This item deals with the supply and application of lime prior to hydroseeding operations.

2.0 REFERENCES

All reference standards shall be current issue or latest revision at the first date of tender advertisement. This specification refers to the following standards, specifications or publications:

- Division 7 Section 5, Hydroseeding
- Division 7 Section 8, Topsoil.

3.0 SUBMISSIONS AND DESIGN REQUIREMENTS

4.0 MATERIALS

Lime shall be agricultural quality lime. The lime shall be free flowing and free of lumps. The Contractor shall supply the lime.

5.0 CONSTRUCTION METHODS

Surfaces that are to be treated with lime shall be shaped and scarified in accordance with surface preparation prior to hydroseeding in accordance with Division 7 Section 5.

For areas where topsoil is to be placed, the surfaces that are to be treated with lime shall be shaped and scarified in accordance with surface preparation required prior to hydroseeding in accordance with Division 7, Section 5 and Division 7, Section 8.

The Engineer shall designate the boundaries of the lime treatment. These areas will include a one (1) metre wide overlap over adjoining vegetation so as to eventually provide a continuous cover of vegetation.

No area shall be limed until the surface preparation has been completed to the approval of the Engineer.

The lime shall be applied at the minimum rate of 0.7 kg/m^2 (7.0 t/ha). The lime shall be applied using the hydroseeding equipment. Spreading by hand will not be allowed.

The lime shall be applied before hydroseeding, in a separate operation from the hydroseeding operation.

6.0 QUALITY CONTROL / QUALITY ASSURANCE

The Contractor shall ensure that the lime does not contaminate watercourses.

Lime has been found to cause corrosion of galvanized metal in guard rail. The Contractor shall take all reasonable care to prevent the contamination of: structures, signs, guard rails, fences utilities and all such installations. Should contamination by lime occur, then the Contractor shall remove the contaminating lime, to the satisfaction of, and by means approved by the Engineer.

7.0 METHOD OF MEASUREMENT.

Measurement for payment shall be by means of the weight of lime used measured in tonnes rounded to one decimal place.

When the lime arrives in pre-weighed bags, the weight shall be determined by counting the bags of lime used.

Where the lime arrives in loose form, then the lime shall be weighed at the Contractor’s expense.

8.0 BASIS OF PAYMENT

Payment at the contract unit price for Lime for hydroseeding shall be full compensation for all labour, materials and use

of equipment, including the weighing of lime if necessary to ensure the application of lime is carried out in conformation with this specification.

Preparation of slopes including shaping and scarifying for liming will not be measured for payment, but shall be considered as incidental to the bid items under which the excavation or embankment construction of such areas was carried out.

9.0 WARRANTY

General...

The Drawings included in this Standard Specification are the most current version of the drawing at the time of publication. In order to ensure the use of the current edition of the Department's Standard Drawings refer to the TIR Internet site. https://novascotia.ca/tran/highways/standarddrawings.asp.

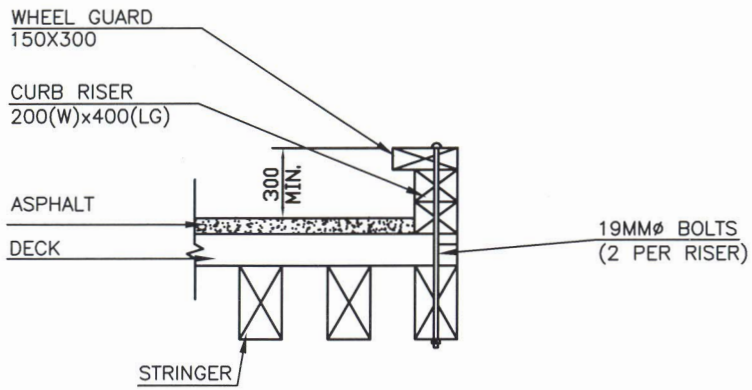

SECTION A–A
(WHEEL GUARD)

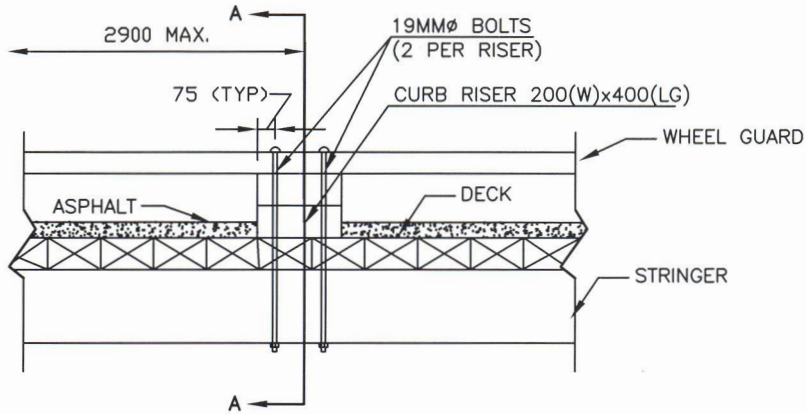

ELEVATION

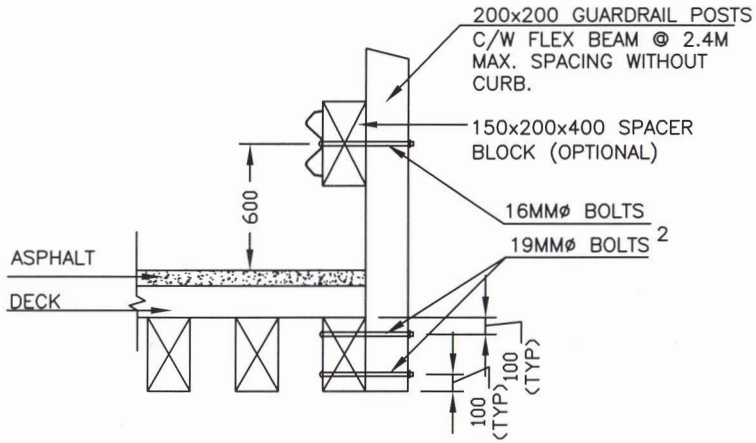

SECTION A–A
(GUARDRAIL)

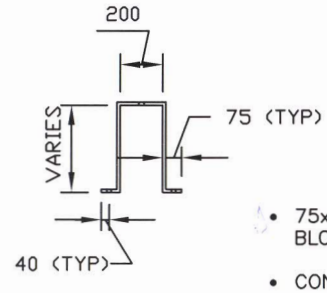

METAL STRAP

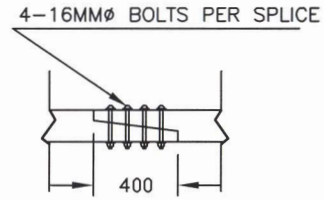

WHEEL GUARD SPLICE

- 75x12.5 SIZED TO POST AND BLOCKING.
- CONNECTED TO STRINGER WITH 2–22MMø LAG SCREWS, LENGTH SAME AS STRINGER WIDTH.
- SPIKE STRAP TO POST

NOTES:
1. GALVANIZED WASHERS 75X75X8 PLACED ON BOTH ENDS OF ALL BOLTS.
2. TOP BOLT CAN BE METAL STRAP.
3. ALL DIMENSIONS ARE IN MILLIMETERS UNLESS OTHERWISE NOTED.

Manager Structural Engineering

Director Highway Engineering Services

Executive Director Highway Engineering and Construction

NOVA SCOTIA
Transportation and Infrastructure Renewal

No.	REVISION

Scale :	N.T.S.
Drawn by :	WRP
Checked by :	R.SWINEMAR
Date of Plan :	2007–05–29
File No. :	B–2007–144

TIMBER BRIDGE BARRIER
LVPL1

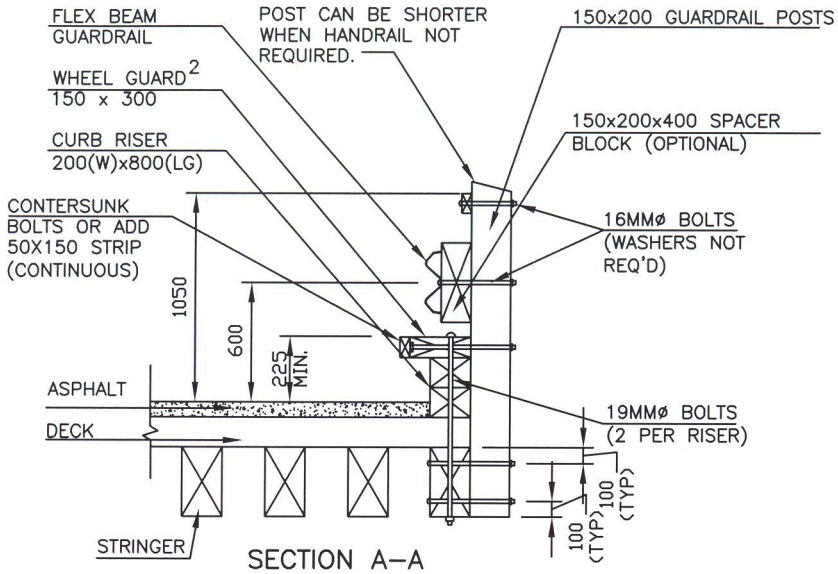

SECTION A–A

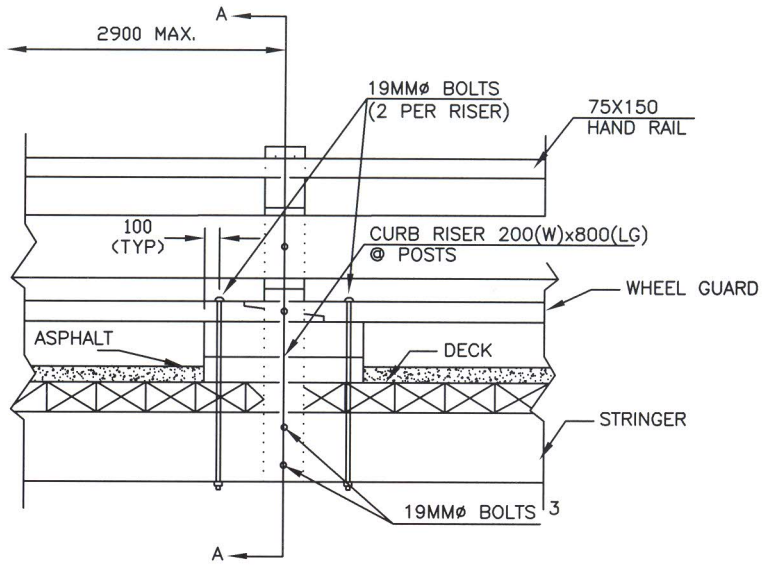

ELEVATION

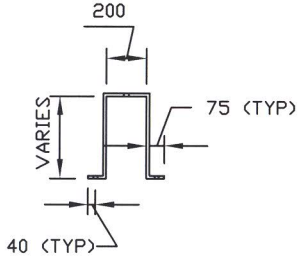

METAL STRAP

- 75x12.5 SIZED TO POST AND BLOCKING.
- CONNECTED TO STRINGER WITH 2–22MMø LAG SCREWS, LENGTH SAME AS STRINGER WIDTH.
- SPIKE STRAP TO POST

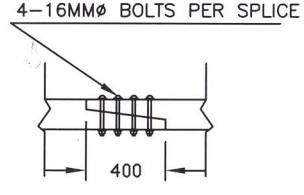

WHEEL GUARD SPLICE

NOTES:
1. GALVANIZED WASHERS 75X75X8 PLACED ON BOTH ENDS OF ALL BOLTS.
2. NOT REQUIRED IF POST SPACING ≠1.905M; POSTS SPACING GREATER THAN 1.905M AND UP TO 2.9M REQUIRE LVPL1 WHEEL GUARD WITH POST SECURED TO WHEEL GUARD.
3. TOP BOLT CAN BE METAL STRAP.
4. ALL DIMENSIONS ARE IN MILLIMETERS UNLESS OTHERWISE NOTED.

NOVA SCOTIA
Transportation and Infrastructure Renewal

No.	REVISION

Scale :	N.T.S.
Drawn by :	WRP
Checked by :	R.SWINEMAR
Date of Plan :	2007–05–29
File No. :	B–2007–145

Manager Structural Engineering

Director Highway Engineering Services

Executive Director Highway Engineering and Construction

TIMBER BRIDGE BARRIER LVPL2

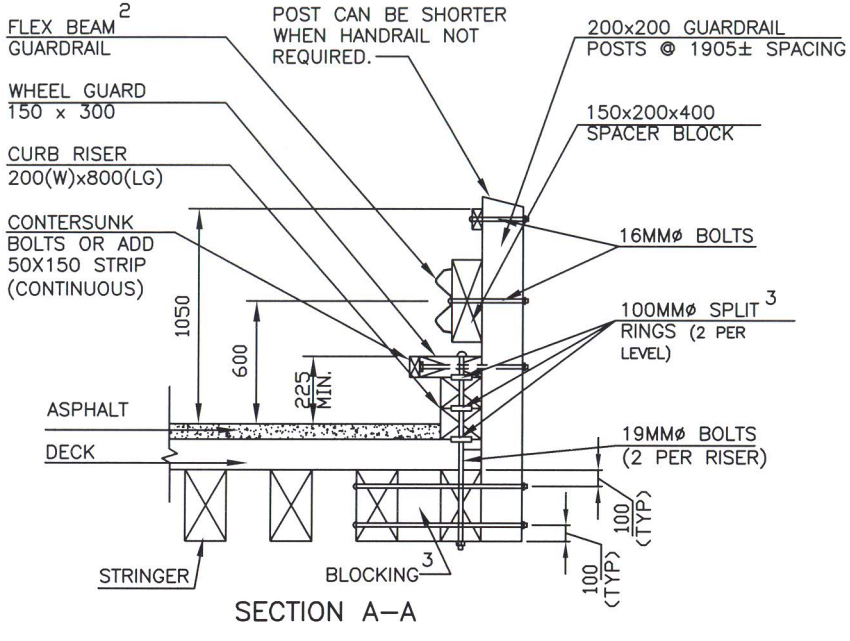

SECTION A–A

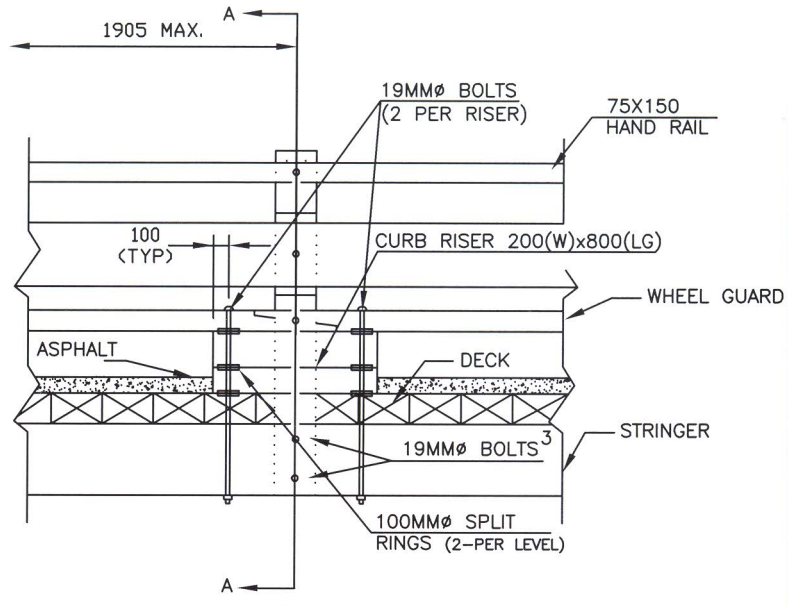

ELEVATION

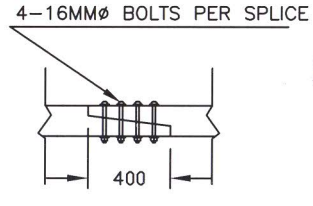

WHEEL GUARD SPLICE

NOTES:
1. GALVANIZED WASHERS 75X75X8 PLACED ON BOTH ENDS OF ALL BOLTS.
2. IF AADT > 2000VPD,
   USE THRIE BEAM OR DOUBLE LAYER FLEXBEAM GUARDRAIL.
3. IF AADT < 2000VPD,
   SPLIT RINGS ARE NOT REQUIRED; CONNECTION TO ONE STRINGER ONLY
   IF DEPTH OF STRINGER IS => 450MM; IF CONNECTION TO ONE STRINGER ONLY, OUTSIDE STRINGER TO BE BLOCKED AND CONNECTED TO NEXT STRINGER AT A MAXIMUM 4.0M SPACING WITH 2–19MMø BOLTS.
4. ALL DIMENSIONS ARE IN MILLIMETERS UNLESS OTHERWISE NOTED.

NOVA SCOTIA
Transportation and Infrastructure Renewal

No.	REVISION

Scale :	N.T.S.
Drawn by :	WRP
Checked by :	R.SWINEMAR
Date of Plan :	2007–05–29
File No. :	B–2007–146

Manager Structural Engineering

Director Highway Engineering Services

Executive Director Highway Engineering and Construction

TIMBER BRIDGE BARRIER
PL1

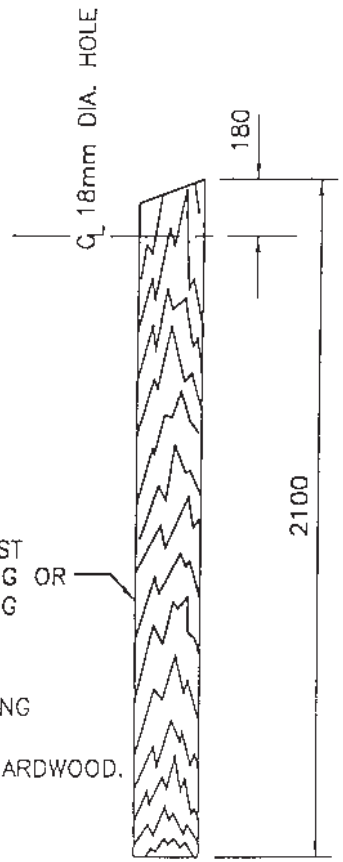

GUARD RAIL POST
200x200x2100 LONG OR
150x200x2100 LONG

NOTE:
IF 150X200X2100 LONG
POSTS ARE USED,
MATERIAL IS TO BE HARDWOOD.

ELEVATION

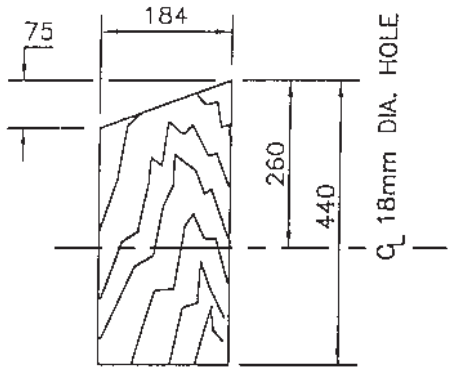

GUARD RAIL BLOCK

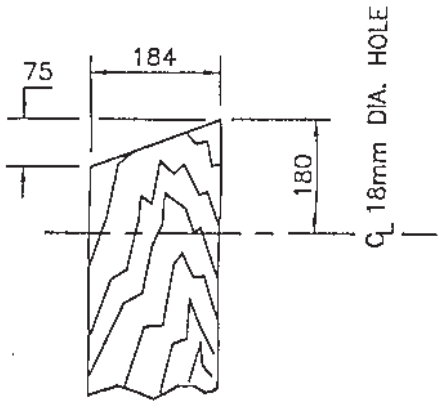

POST END DETAIL

NOTE: ALL DIMENSIONS ARE
IN MILLIMETRES

Nova Scotia DEPARTMENT OF TRANSPORTATION AND PUBLIC WORKS	
GUARD RAIL POST DETAILS	
Drawn by: M.W.L. Date:Dec.02,1996	Approved by: M. Pertus Title: Manager, Highway and Bridge Design Date: Dec.16,1996
Dwg.No. HS519.DWG	

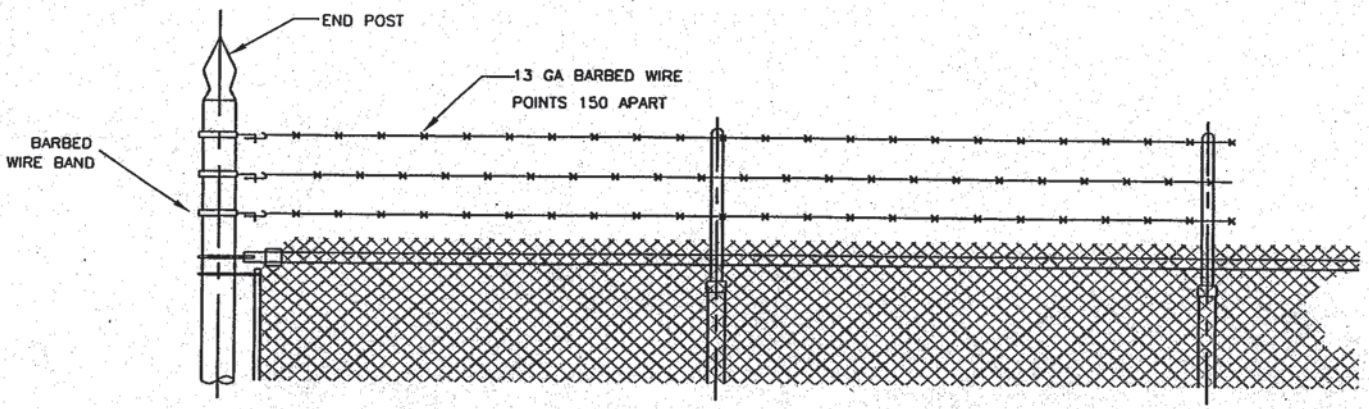

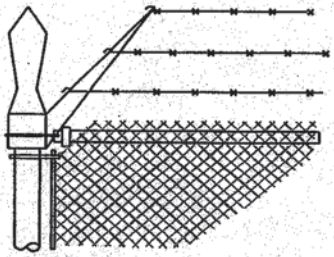

CORNER POST
WITH BARBED WIRE ARM

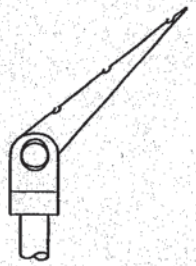

BARBED WIRE ARM

NOTES:
1. ALL DIMENSIONS ARE IN MILLIMETRES UNLESS OTHERWISE NOTED.

Manager Highway Planning and Design

Director Highway Engineering Services

Executive Director Engineering and Construction

NOVA SCOTIA
Transportation and Public Works

No.	REVISION

Scale : N.T.S.
Drawn by : M. LoBreche
Checked by : K.BODDY
Date of Plan : FEB_06
File No. : S-2006-017

INSTALLATION OF BARBED WIRE FOR CHAIN LINK FENCES HS604

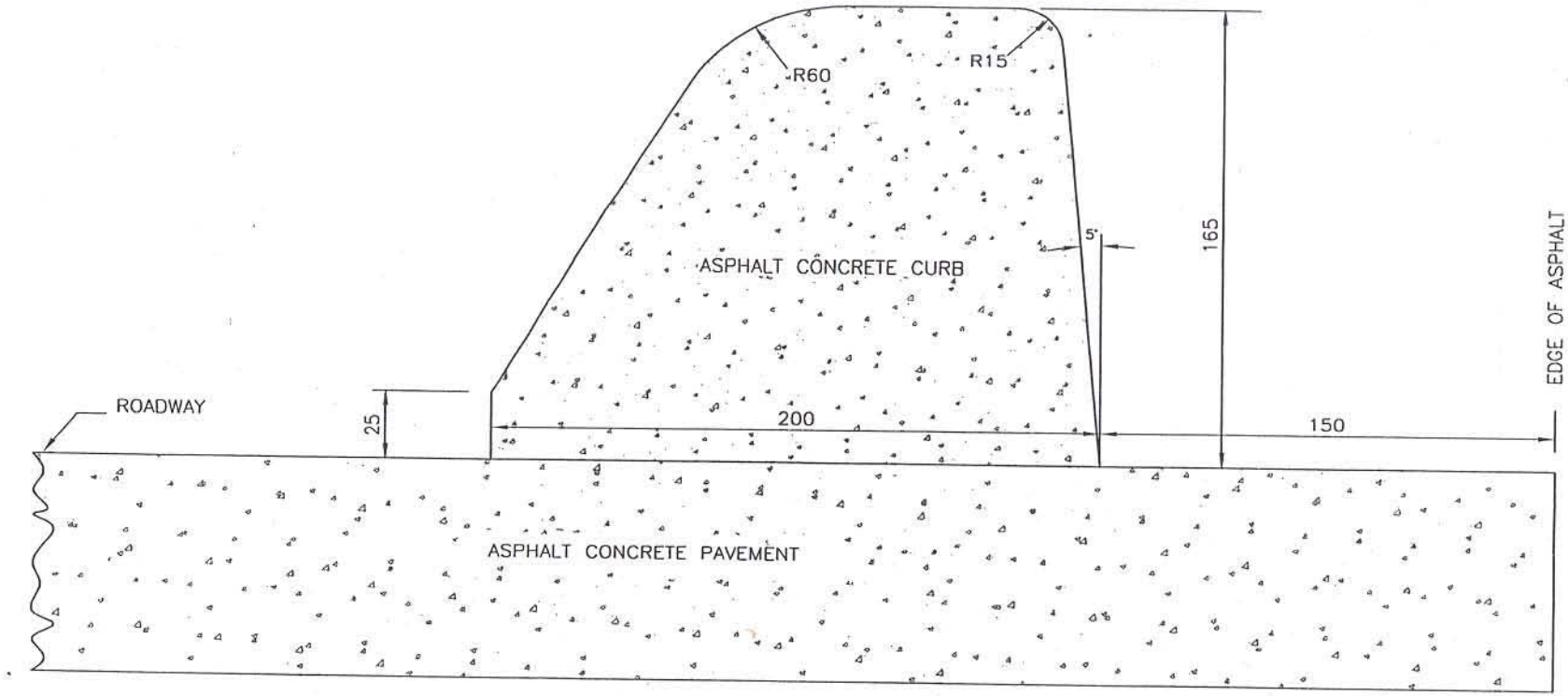

NOTES:
1. ALL DIMENSIONS IN MILLIMETRES UNLESS OTHERWISE NOTED.

Manager, Highway Planning and Design

Director, Highway Engineering Services

Executive Director Highway Engineering and Construcion

NOVA SCOTIA
Transportation and Public Works

No.	REVISION

Scale : N.T.S.
Drawn by : M. LaBreche
Checked by : K.BODDY
Date of Plan : FEB_06
File No. : S-2006-025

ASPHALT CONCRETE CURB
HS402

DESCRIPTION	TRAFFIC VOLUME (AADT)	TARGET TRUCK DESIGNATION	DESIGN SPEED (km/h)	LANE WIDTH (m)			PAVED SHOULDER WIDTH (m)			TOTAL SHOULDER WIDTH (m)			ROUNDING (m)	FINISHED TOP WIDTH (m)
				MAINT[1]	3R[2]	NEW[3]	MAINT[1]	3R[2]	NEW[3]	MAINT[1]	3R[2]	NEW[3]		
FREEWAY (A)	>10,000	SCHEDULE C	90–120	MAINTAIN EXISTING LANE WIDTH	3.7	3.7	MAINTAIN EXISTING SHOULDER TYPE	PAVED OUT–2.0 IN–1.5	PAVED OUT–2.0 IN–1.5	2.5 2.0	OUT–2.5 IN–2.0	OUT–2.5 IN–2.0	0.8	13.5
MAJOR ARTERIAL (B)	<10,000	SCHEDULE C	90–120		3.7	3.7		PAVED 1.5[4]	PAVED 1.5	2.5	2.5	2.5	0.8	14.0
MINOR ARTERIAL (C)	>5,000	SCHEDULE C	80–100		3.5	3.7		PAVED 0.0–0.5	PAVED 0.5	1.5	1.7	2.2	0.6	13.0
MINOR ARTERIAL (D)	<5,000	SCHEDULE D[5] SPRING WEIGHT EXEMPT[5]	80–90		3.3	3.5		PAVED 0.0–0.3	PAVED 0.3	1.5	1.7	2.0	0.6	12.2
MAJOR COLLECTOR (E)	>3,000	SCHEDULE D	80–90		3.3	3.5		0.0	0.0–0.2[6]	1.5	1.5	2.0	0.4	11.8
MINOR COLLECTOR (F)	<3,000	SCHEDULE D	70–80		3.0	3.3		UNPAVED	UNPAVED	1.0	1.2	1.5	0.4	10.4

NOTES:
1. MAINTENANCE STANDARDS
2. 3R – RESURFACING, RESTORATION, REHABILITATION
3. NEW CONSTRUCTION / RECONSTRUCTION
4. MAY CONSIDER MINOR ARTERIAL A WIDTH IF LOW TRAFFIC VOLUME AND TWINNING IS 15+ YEARS AWAY.
5. SCHEDULE C – IF POSSIBLE WHEN INDUSTRY NEEDS WARRANT.
6. PAVED SHOULDER WIDTH FOR MAJOR COLLECTORS WILL BE 0.0 FOR AADT<5000 AND 0.2 FOR AADT>5000
7. THIS TABLE ONLY INCLUDES CERTAIN CROSS SECTION ELEMENTS, USERS ARE REMINDED TO ALSO CONSULT THE TIR HIGHWAY DESIGN GUIDELINES, FILE # S–2009–001, FOR OTHER IMPORTANT CROSS SECTION ELEMENTS AND DESIGN CRITERIA.
8. REF: HIGHWAY FUNCTIONAL CLASSIFICATION REVIEW, M. DELANEY, DEC/07

NOVA SCOTIA
Transportation and Infrastructure Renewal

No.	REVISION
1	DESCRIPTION FIELD UPDATED–MAY 2013

Scale : N.T.S.
Drawn by : M.LABRECHE
Checked by : K.BODDY
Date of Plan : AUG2009
File No. : S–2009–002

Manager, Highway Planning and Design

Director Highway Engineering Services

Executive Director Highway Engineering and Construction

CONSTRUCTION / RECONSTRUCTION 3R, MAINTENANCE GUIDELINES

Explanation of Nova Scotia's Highway Functional Classification System

The Arterial System has three subsystems:

FREEWAY (A) - This is a highway designed for safer high-speed operation of motor
vehicles through the elimination of at-grade intersections. It is fully access controlled with the only access/egress being via ramps at interchanges. While this definition is quite often used to describe either a divided or undivided facility, it has been decided to apply the definition simply to fully 'controlled access' divided facilities - in Nova Scotia's case that means the divided four lane highways such as Highway 118, Highway 102, Highway 104 from New Glasgow to the New Brunswick border, sections of Highway 103 & Highway 101 that have been twinned, etc.

MAJOR ARTERIAL (B) - This is an undivided 'controlled access" highway designed to form part of the Freeway system when the additional lanes are added. An example would be much of Highway 103 and Highway 101 that are planned for "twinning' in the future. The twinning, including parallel access roads, will remove all access/egress except by ramp and make these roads true Freeways.

MINOR ARTERIAL (C, D) - This is an undivided roadway that performs an arterial function as follows:

Minor Arterial (C) - A high speed connector to a Freeway or Major Arterial e.g. Highway 142 (the Springhill Connector); or a roadway currently serving as part of the overall Major Arterial/Freeway system but slated to be bypassed in the future (e.g. Highway 104 at Antigonish; Highway 103 - Hebbs Cross to Danesville; Highway 101 from Digby to Weymouth; and since it is internal to completed sections of the Major Arterial system - Trunk 4 from the Canso Causeway to Highway 104 at Exit 43, Highway 104).

This classification also applies to interchange ramps leading to a Major Arterial or a Freeway and "purpose built" controlled access connectors such as Greenwich Connector, Highbury Connector, etc.

There are other situations involving interchange ramps and connector roads as follows:

- In many cases, Major Arterials and Freeways interchange with existing Trunks or Routes. In these cases, while the actual ramps will be Minor Arterial, the connector will reflect the function of the intersecting roadway which could be a Minor Arterial, or a Collector (Major or Minor).
- In some cases, a Major Arterial or Freeway interchanges at a local road. This interconnection may require that the local road (or the section leading to an Arterial or Collector) to be reclassified to a new functional class, typically a Minor Collector. There will be a couple of cases where, despite the interchange at a local road, the functional classification does not change from local.

Minor Arterial (D) - A highway serving a part of the province not serviced by a Freeway or Major Arterial Road, e.g. Trunks 6, 8, 10, 14, 30 (the Cabot Trail), Trunk 7 - Musquodoboit Harbour to Antigonish, and Trunk 4 - St. Peter's to Sydney/Glace Bay.

Note: A Trunk road that has been paralleled by a Major Arterial or Freeway will not normally qualify as an Arterial and will fall into a lower classification.

COLLECTOR ROADS (E, F) - As the name implies, these roads 'collect' traffic from the local road system and transmit this traffic to the arterial system and/or other collector or local road systems. They have the following characteristics:

- Typically serve inter-county as opposed to intra-provincial traffic and are characterized by shorter travel distances than arterials.
- Generally have lower speeds than arterials.
- The mobility function is equivalent to or greater than the land access function.

See Policy # PR5063 'Reclassification of Local Roads' for a complete list of minimum criteria for reclassifying a Local Road to a Collector Road.

Collector Roads are further subdivided as follows:

Major Collectors (E) - These roads have the following characteristics:

- Serve small towns (population less than 4000) or major traffic generators (Federal Parks, Major Tourist Destinations, Major Industries, etc.) not served by the Arterial System.
- Link these places with nearby cities, towns or Arterial Roads.
- Serve the more important intra-county traffic.

Minor Collectors (F) - These roads have the following characteristics:

- Are spaced such that they bring developed areas within a reasonable distance of a Collector Road.
- Serve remaining small communities.

LOCAL ROADS (G, H, I, J) - These roads primarily provide land access and have little or no through traffic. Further stratification of Local Roads was beyond the scope of the Highway Functional Classification Review.

TRUCK ROUTES (M, N) - These roads primarily provide access for trucks associated with resource-based industries. Further stratification of Truck Routes was beyond the scope of the Highway Functional Classification Review.

Ref: Highway Functional Classification Review, Martin Delaney, December 2007

Revised May 2013

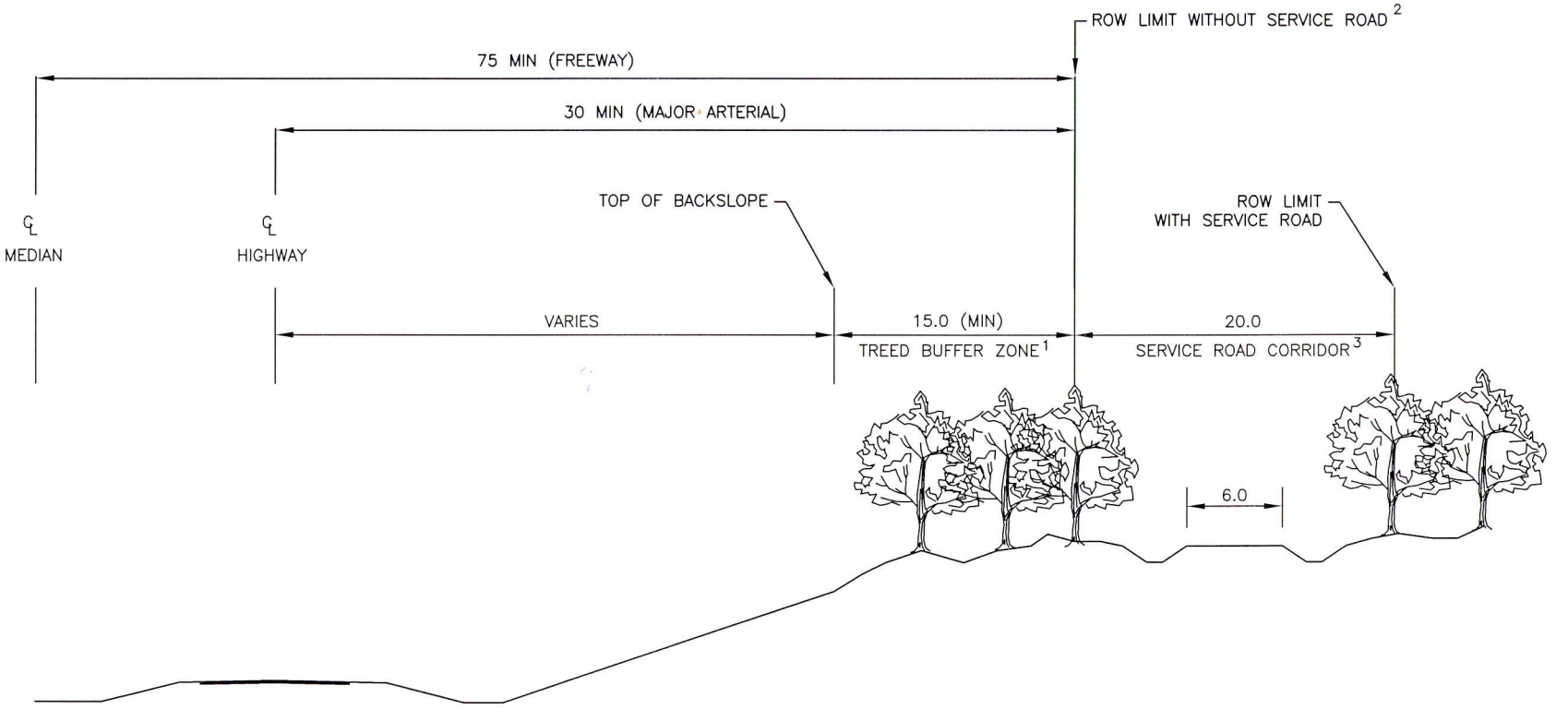

NOTES:
1. TO BE CONSIDERED WHEN A SERVICE ROAD IS REQUIRED IN CUT OR SHALLOW FILL AREAS, TO PREVENT DAMAGE TO CROPS, DRIFTING SNOW, ETC.
2. TO BE ADJUSTED TO ALLOW FOR MINIMUM OF 5.0m BEYOND DAYLIGHT LOCATION OR EXCEPTIONALLY 3.0m MAY BE ACCEPTABLE.
3. REFER TO STANDARD DRAWING S–2009–017 FOR DETAILS.
4. ALL DIMENSIONS ARE IN METRES UNLESS OTHERWISE NOTED.

Manager Highway Planning and Design

Director Highway Engineering Services

Executive Director Highway Engineering and Construction

NOVA SCOTIA
Transportation and Infrastructure Renewal

No.	REVISION

Scale : N.T.S.
Drawn by : M.ANDERSON
Checked by : K.BODDY
Date of Plan : AUG2009
File No. : S–2009–005

STANDARD CORRIDOR
FREEWAY & MAJOR ARTERIAL

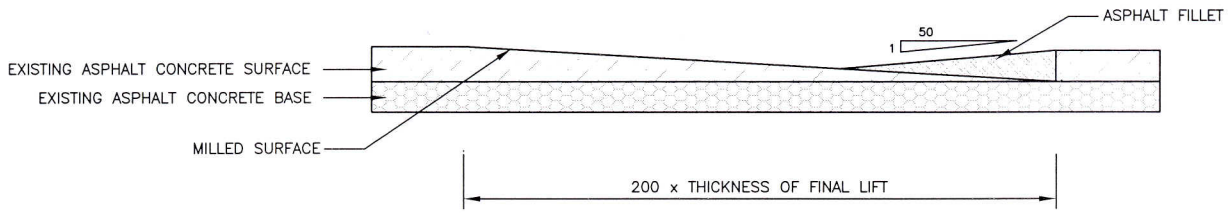

STAGE 1

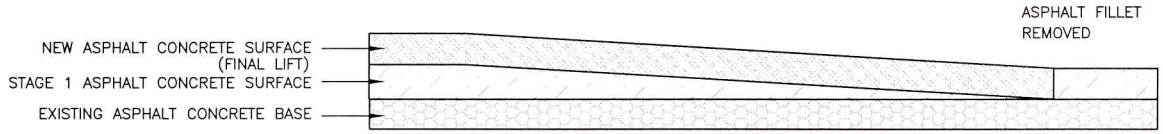

STAGE 2

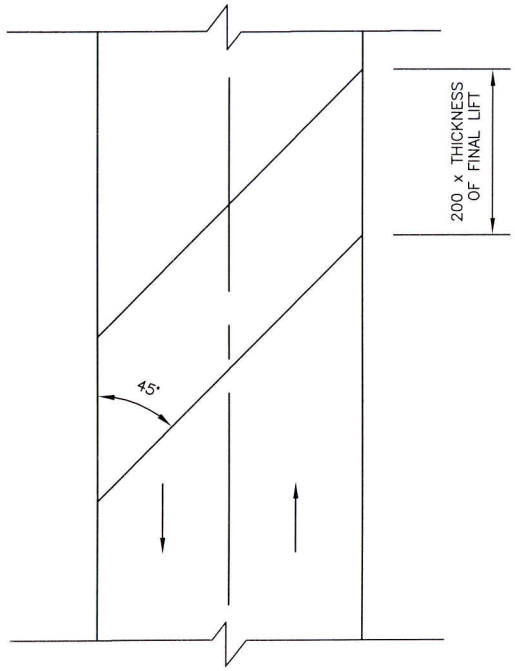

PLAN VIEW

NOTES:

Manager Highway Planning and Design

Director Highway Engineering Services

Executive Director Highway Engineering and Construction

NOVA SCOTIA
Transportation and Infrastructure Renewal

No.	REVISION

Scale : N.T.S.
Drawn by : M.LABRECHE
Checked by : K.BODDY
Date of Plan : AUG2009
File No. : S-2009-013

TRANSVERSE ASPHALT CONCRETE KEY JOINT HS404

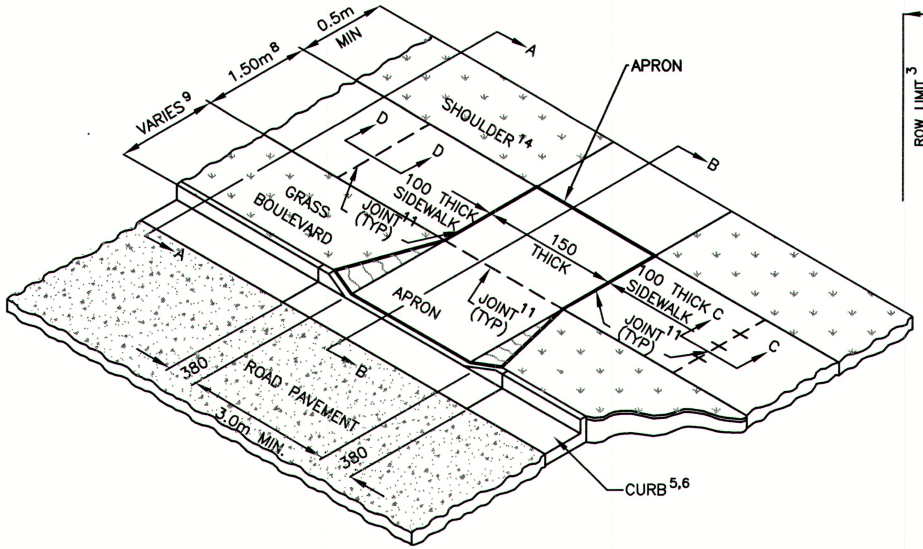

TYPICAL DRIVEWAY/CROSSWALK APRON

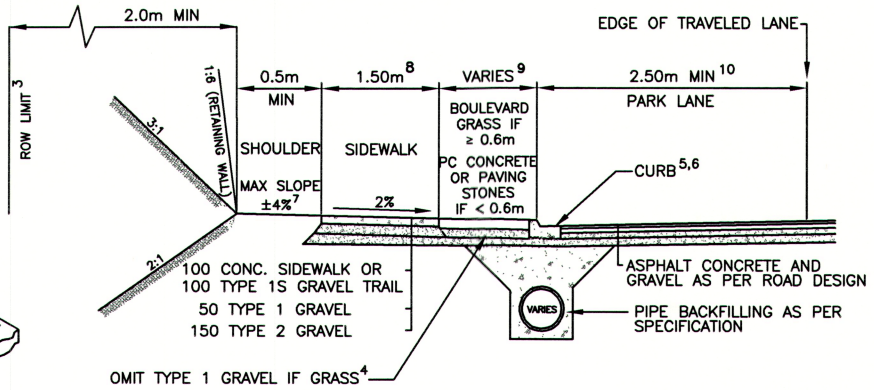

SECTION A–A

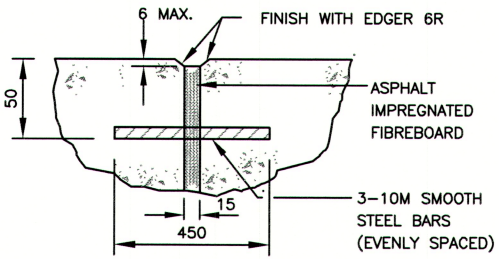

SECTION C–C

EXPANSION JOINT 12, 13

TO BE PLACED EVERY 50.0m ON TYPICAL SIDEWALK

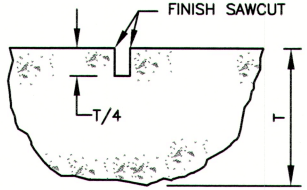

SECTION D–D

CONTROL JOINT 11

TO BE PLACED EVERY 1.50m ON TYPICAL SIDEWALK

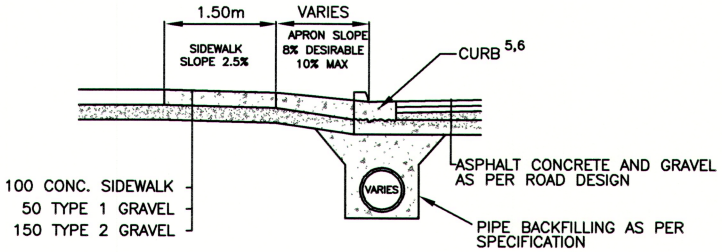

SECTION B–B

APRON DETAIL

NOTES:
1. APRON AND CURB ARE OF PORTLAND CEMENT CONCRETE. SIDEWALK IS OF PORTLAND CEMENT CONCRETE. TRAIL IS OF COMPACTED GRAVEL.
2. GRASS AREAS TO BE PLANTED/REPLANTED WITH SOD AND 100 MIN. TOP SOIL OR SEED WITH 150 MIN. TOPSOIL.
3. TO BE ADJUSTED TO ALLOW FOR MINIMUM OF 2.0m BEYOND DAYLIGHT LOCATION OR EXCEPTIONALLY 1.0m MAY BE ACCEPTABLE.
4. AVOID USING GRAVEL UNDER GRASS AREAS EXCEPT AS REQUIRED FOR ADJACENT CONCRETE STRUCTURES.
5. SEE PLAN S–2009–023 FOR ASPHALT CURB DETAILS.
6. SEE PLAN S–2009–019, S–2009–020, AND S–2009–021 FOR CONCRETE CURB DETAILS.
7. TO MATCH EXISTING LAWN OR PAVED SURFACE.
8. TYPICALLY 3.0M WHERE A MULTI–USE TRAIL USED.
9. 1.2m GRASS DESIRABLE FOR CONCRETE SIDEWALK. MAY BE REDUCED IN WIDTH WITH PARK LANE.
10. 1.0m MINIMUM IF NO PARK LANE.
11. TO BE SAW CUT.
12. BARS ARE TO BE GREASED ON ONE SIDE OF THE JOINT.
13. DURING CONSECUTIVE POURS, THE END OF EACH POUR IS TO OCCUR AT AN EXPANSION JOINT. WHERE THIS IS NOT FEASIBLE, AN ADDITIONAL EXPANSION JOINT IS TO BE INSTALLED.
14. GRASS SHOULDER FOR PORTLAND CEMENT CONCRETE SIDEWALK. GRAVEL SHOULDER FOR GRAVEL TRAIL.
15. ALL DIMENSIONS ARE IN MILLIMETRES UNLESS OTHERWISE NOTED.

NOVA SCOTIA
Transportation and Infrastructure Renewal

No.	REVISION
2	CROSSWALK MATERIAL REVISED – Mar 18
1	NOTE 8 ADDED, NOTE 11 & 12 CHANGED – Feb 10

Scale : N.T.S.
Drawn by : M.LABRECHE/R.SUTCLIFFE
Checked by : K.BODDY
Date of Plan : MAR2018
File No. : S–2009–014

A/Manager Highway Planning and Design

A/Director Highway Engineering Services

Executive Director Highway Engineering and Construction

SIDEWALK DETAILS
HS501

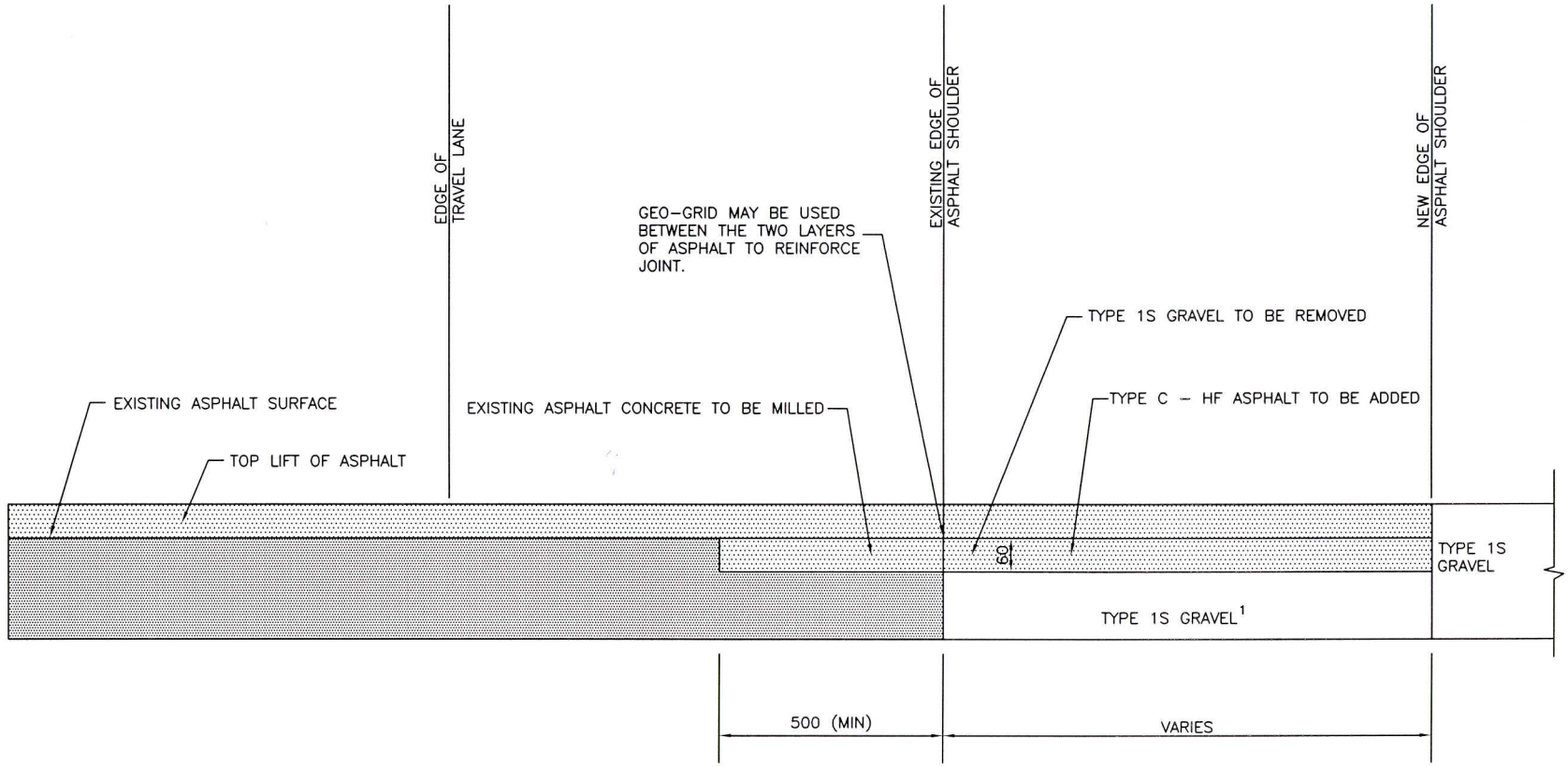

NOTES:
1. TO BE GRADED AND LEVEL WITH MILLED SURFACE.
2. THIS DETAIL APPLICABLE TO LANE WIDENING AS WELL.
3. ALL DIMENSIONS ARE IN MILLIMETRES UNLESS OTHERWISE NOTED.

Manager Highway Planning and Design

Director Highway Engineering Services

Executive Director Highway Engineering and Construction

NOVA SCOTIA
Transportation and Infrastructure Renewal

No.	REVISION

Scale : N.T.S.
Drawn by : M.BARTEAUX
Checked by : K.BODDY
Date of Plan : AUG2009
File No. : S-2009-015

ASPHALT SHOULDER WIDENING FREEWAYS AND ARTERIALS

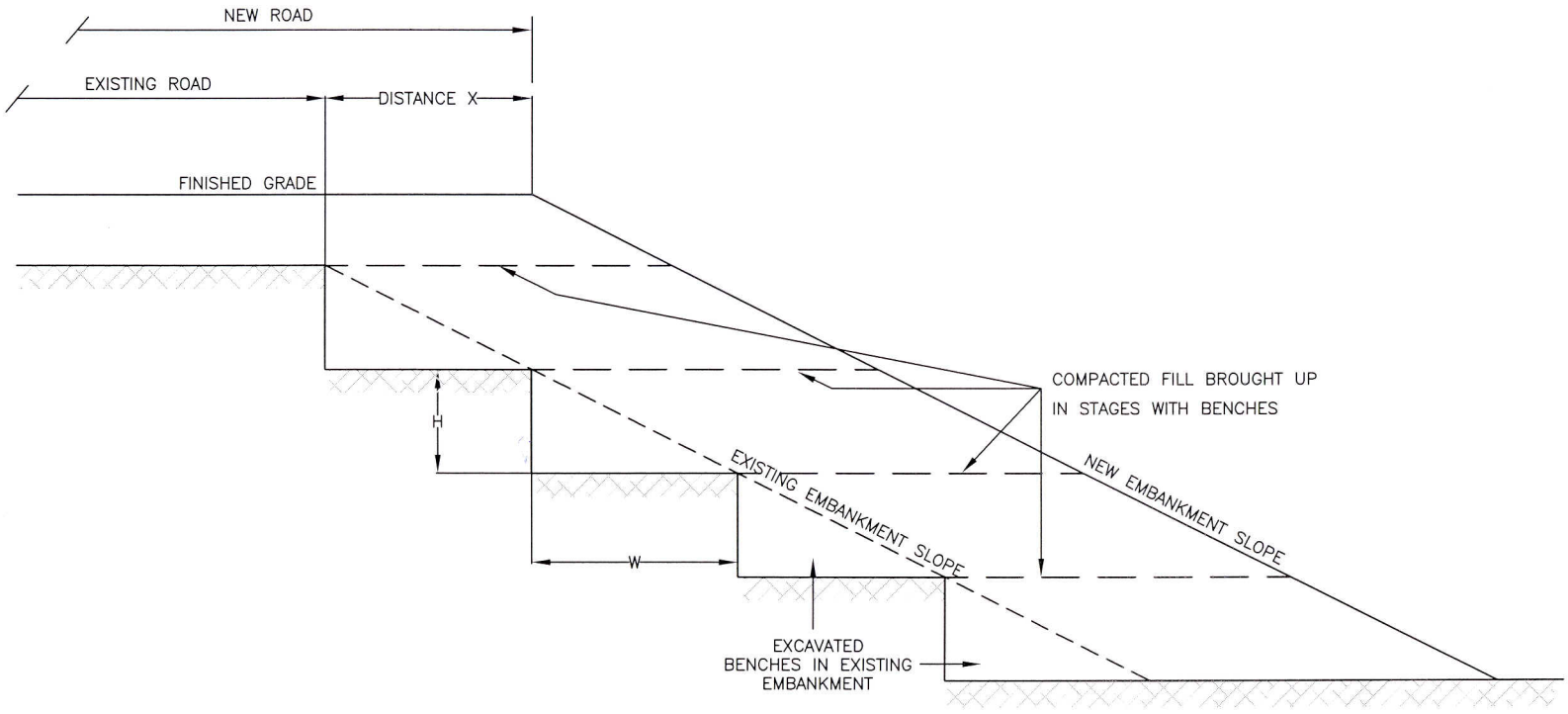

MAXIMUM BENCH HEIGHT & WIDTH DIMENSIONS		
EXISTING SLOPES	FILLS >= 4.0m	FILLS < 4.0m
3:1 TO 2:1	W=2.5m H=VARIES	W=1.25m H=VARIES
2:1	W=VARIES H=1.25m	W=VARIES H=0.75m

NOTES:
1. THIS STANDARD APPLIES TO WIDENING OF EMBANKMENTS WHEN DISTANCE X >= 1.0m AT FINISHED GRADE LEVEL OF NEW ROADBED.
2. BENCHING NOT REQUIRED ON SLOPES FLATTER THAN 3:1 OR WHERE FIELD CONDITIONS SHOW IT UNNECESSARY AS DETERMINED BY THE ENGINEER.
3. BENCHES TO BE EXCAVATED ONE LEVEL AT A TIME AND COMPACTED FILL BROUGHT UP BEFORE NEXT LEVEL IS EXCAVATED.

Manager Highway Planning and Design

Director Highway Engineering Services

Executive Director Highway Engineering and Construction

NOVA SCOTIA
Transportation and Infrastructure Renewal

No.	REVISION

Scale : N.T.S.
Drawn by : M.LABRECHE
Checked by : K.BODDY
Date of Plan : AUG2009
File No. : S-2009-016

BENCHING OF EMBANKMENT SLOPES

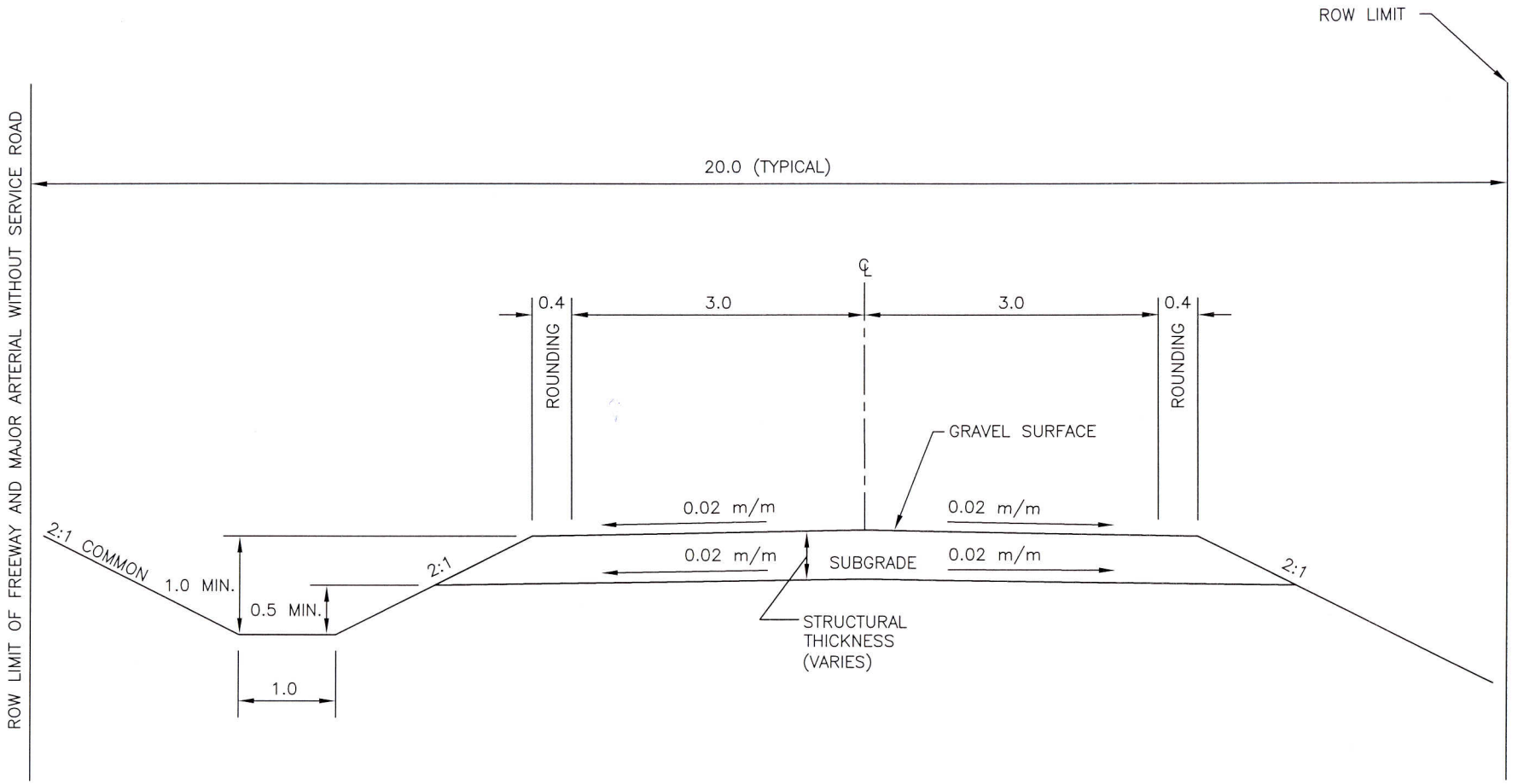

NOTES:
1. THE SUBGRADE WIDTH IS DEPENDENT UPON THE DESIGN DEPTH OF THE STRUCTURAL MATERIAL.
2. DESIGN LOADING: 38500kg
3. DIMENSIONS ARE MEASURED PERPENDICULAR TO CENTERLINE.
4. ALL DIMENSIONS ARE IN METRES UNLESS OTHERWISE NOTED.

Manager Highway Planning and Design

Director Highway Engineering Services

Executive Director Highway Engineering and Construction

NOVA SCOTIA
Transportation and Infrastructure Renewal

No.	REVISION

Scale : N.T.S.
Drawn by : M.ANDERSON
Checked by : K.BODDY
Date of Plan : AUG2009
File No. : S-2009-017

STANDARD CROSS SECTION SERVICE ROAD

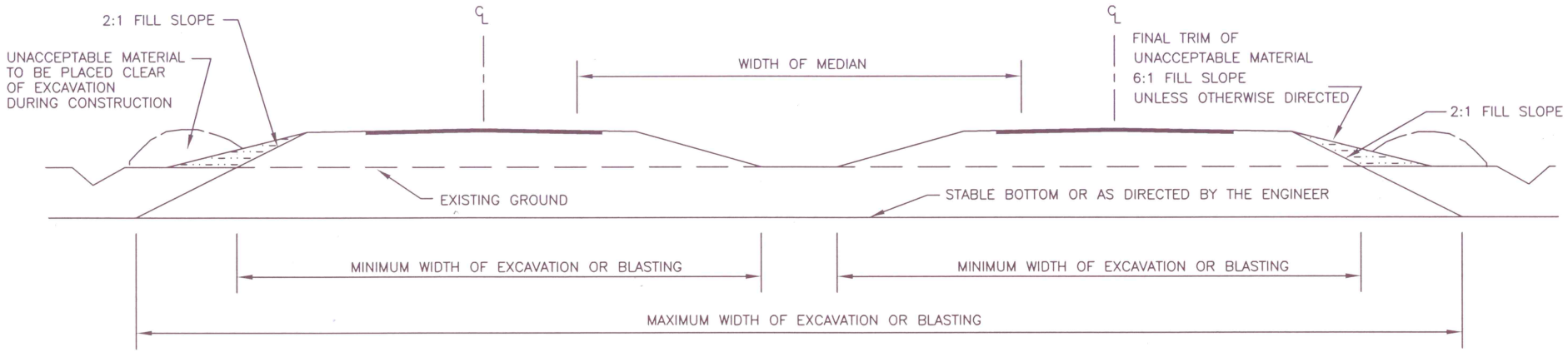

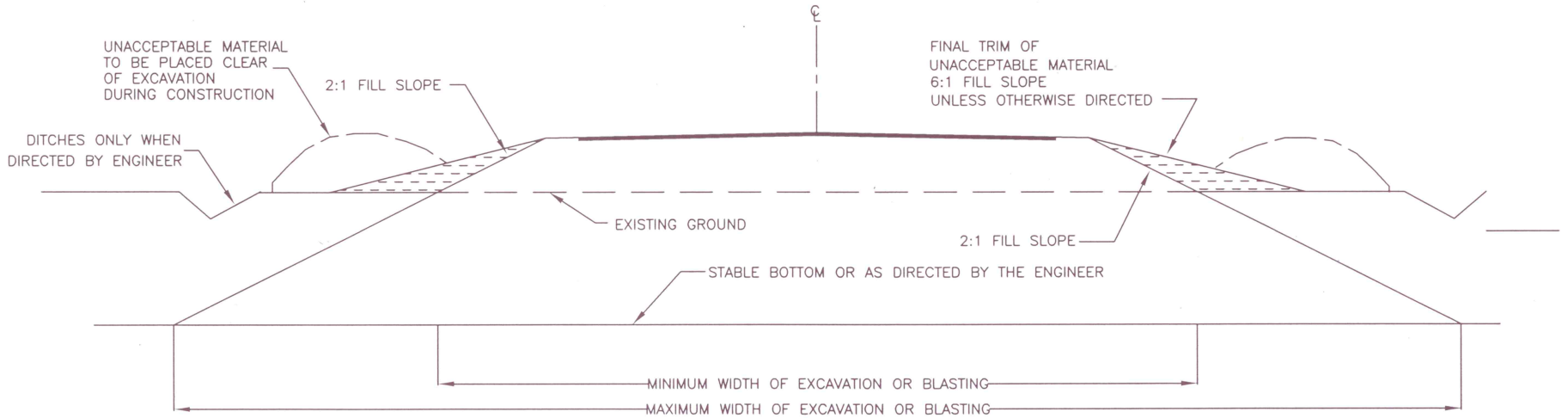

NOTES:
1. CONSTRUCTION DETAILS APPLICABLE TO BARRIER MEDIAN CROSS–SECTION.

Manager Highway Planning and Design

Director Highway Engineering Services

Executive Director Highway Engineering and Construction

NOVA SCOTIA
Transportation and Infrastructure Renewal

No.	REVISION
1	HS # ADDED TO TITLE

Scale :	N.T.S.
Drawn by :	M.LABRECHE
Checked by :	K.BODDY
Date of Plan :	AUG2009
File No. :	S–2009–018

SWAMP TREATMENT UNDER EMBANKMENTS - HS201

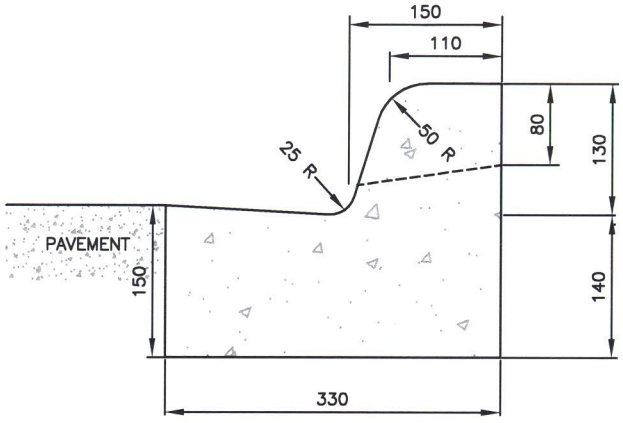

TYPE A

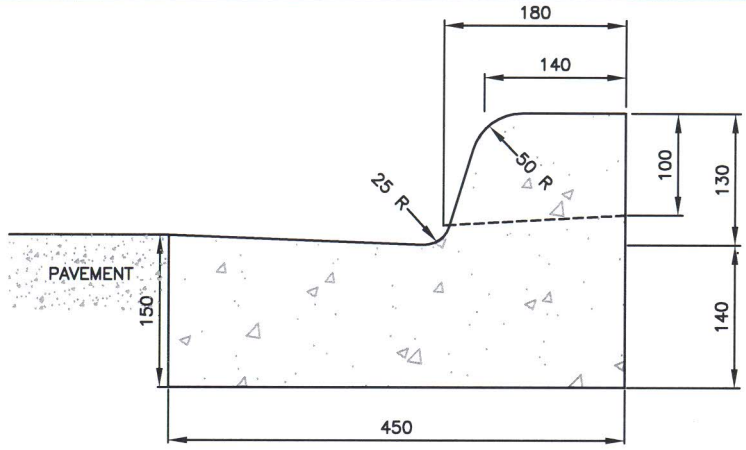

TYPE B

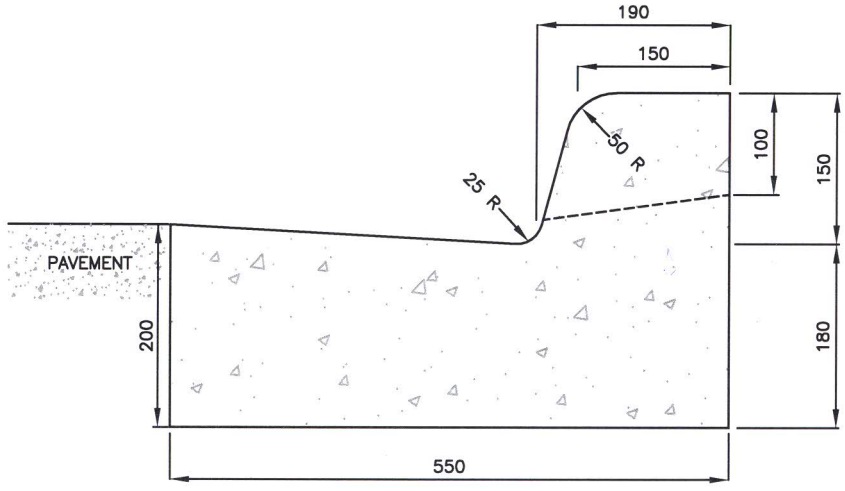

TYPE C

NOTES:
1. ALL CURBS ARE OF PORTLAND CEMENT CONCRETE.
2. CURBS SHALL BE BUILT ON AN APPROVED GRANULAR BASE HAVING A DEPTH OF MINIMUM 150mm.
3. EXPOSED EDGES SHALL BE FINISHED WITH A ROUNDED TOOL TO PRODUCE A 25mm RADIUS OR AS SHOWN.
4. ALL DIMENSIONS ARE IN MILLIMETRES UNLESS OTHERWISE NOTED.

NOVA SCOTIA
Transportation and Infrastructure Renewal

No.	REVISION
2	DIMENSION ADDED TO TYPE "C" (June 2012)
1	HS # ADDED TO TITLE

Scale :	N.T.S.
Drawn by :	M.LABRECHE
Checked by :	K.BODDY
Date of Plan :	AUG2009
File No. :	S-2009-019

Manager Highway Planning and Design

Director Highway Engineering Services

Executive Director Highway Engineering and Construction

CURB TYPE A, B, AND C
HS-504

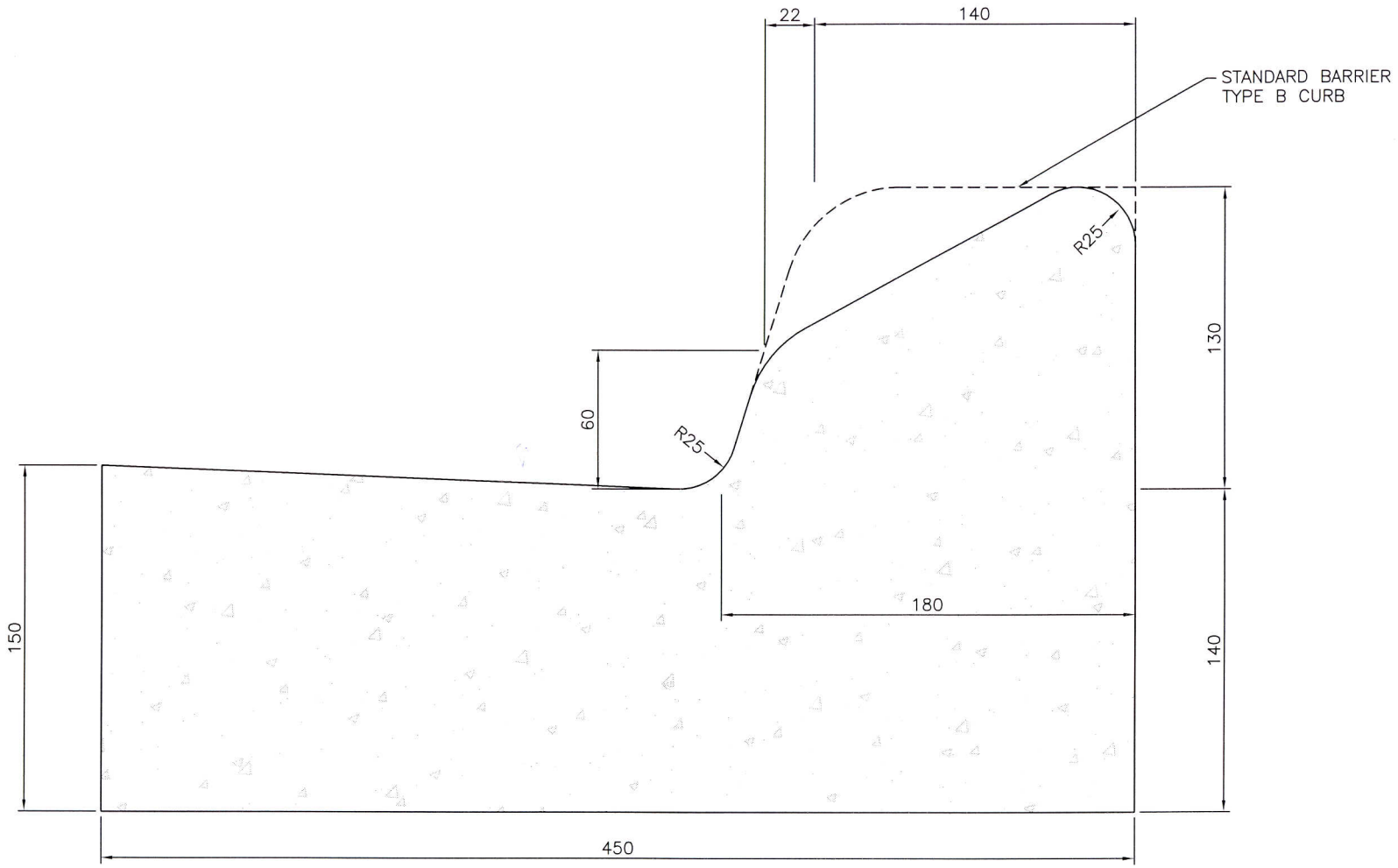

NOTES:
1. CURB IS OF PORTLAND CEMENT CONCRETE.
2. CURB SHALL BE BUILT ON AN APPROVED GRANULAR BASE HAVING A DEPTH OF 150mm MIN.
3. EXPOSED EDGES SHALL BE FINISHED WITH A ROUNDED TOOL TO PRODUCE A 25mm RADIUS OR AS SHOWN.
4. ALL DIMENSIONS ARE IN MILLIMETRES UNLESS OTHERWISE NOTED.

Manager Highway Planning and Design

Director Highway Engineering Services

Executive Director Highway Engineering and Construction

NOVA SCOTIA
Transportation and Infrastructure Renewal

No.	REVISION

Scale : N.T.S.
Drawn by : M.BARTEAUX
Checked by : K.BODDY
Date of Plan : AUG2009
File No. : S-2009-020

SEMI-MOUNTABLE CURB TYPE B1

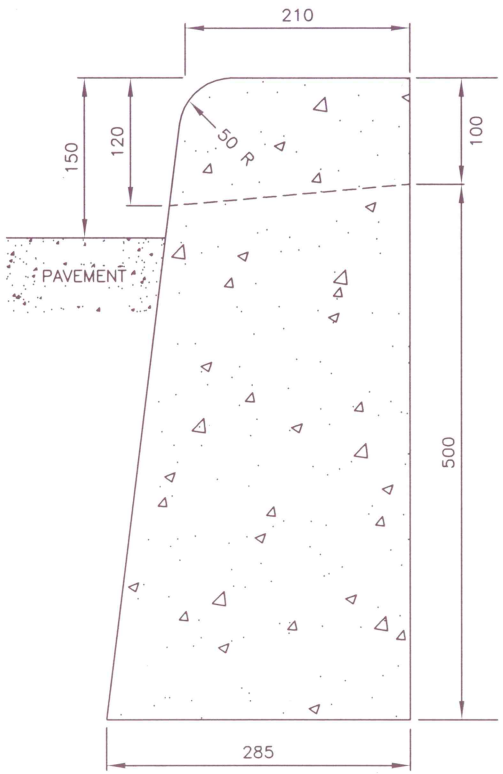

TYPE D

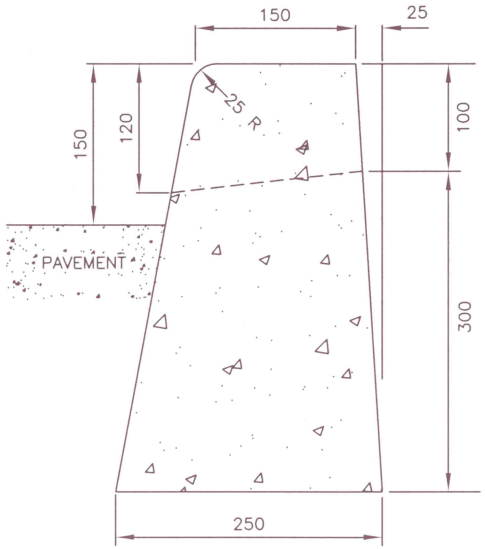

TYPE E

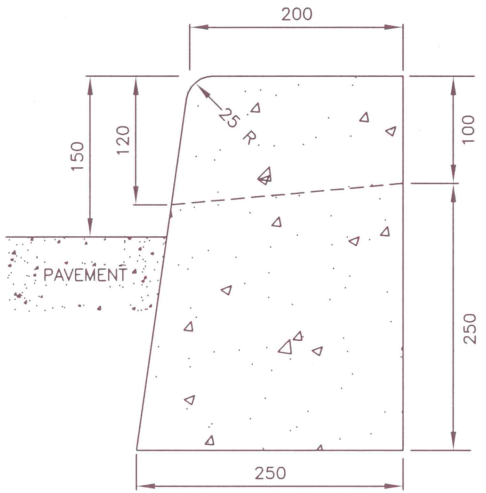

TYPE F

NOTES:
1. ALL CURBS ARE OF PORTLAND CEMENT CONCRETE.
2. CURBS SHALL BE BUILT ON AN APPROVED GRANULAR BASE HAVING A DEPTH OF 150mm MIN.
3. EXPOSED EDGES SHALL BE FINISHED WITH A ROUNDED TOOL TO PRODUCE A 25mm RADIUS OR AS SHOWN.
4. ALL DIMENSIONS ARE IN MILLIMETRES UNLESS OTHERWISE NOTED.

NOVA SCOTIA
Transportation and Infrastructure Renewal

No.	REVISION
1	HS # ADDED TO TITLE

Scale :	N.T.S.
Drawn by :	M.LABRECHE
Checked by :	K.BODDY
Date of Plan :	AUG2009
File No. :	S-2009-021

Manager Highway Planning and Design

Director Highway Engineering Services

Executive Director Highway Engineering and Construction

CURB TYPE D, E, AND F
HS-505

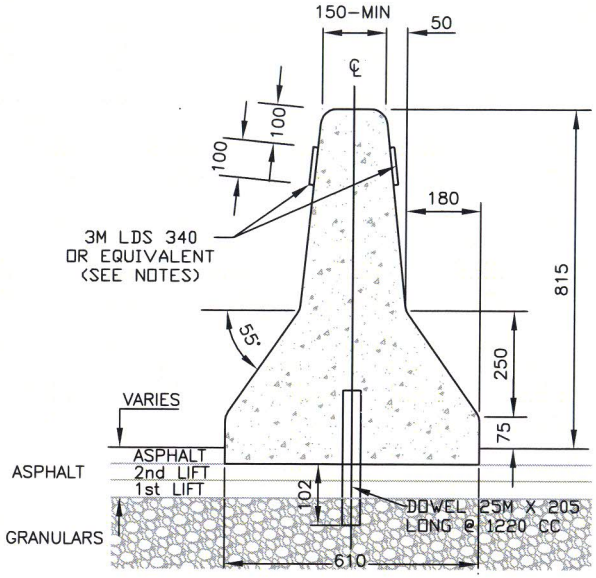

BARRIER OVER ROADWAY

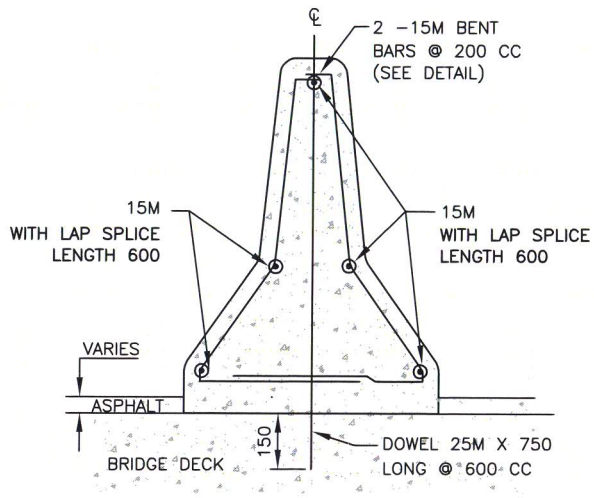

BARRIER OVER BRIDGES

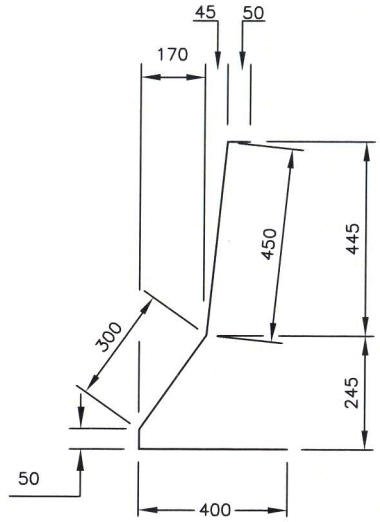

BENT BAR DETAIL

NOTES:
1. CONCRETE SHALL BE CONSTRUCTED IN ACCORDANCE WITH DIVISION 5, SECTION 7 OF STANDARD SPECIFICATIONS.
2. TRAVERSE JOINTS ARE RECOMMENDED AT 6.0m INTERVALS (MAXIMUM).
3. CONCRETE VOLUME = 0.254 CUBIC m/m.
4. OUTSIDE CORNERS TO BE FINISHED TO 25R.
5. EXPOSED ENDS FACING TRAFFIC SHOULD BE PROTECTED USING ONE OF THE TRACC FAMILY END TREATMENTS OR THE HEART END TREATMENT, BOTH BY TRINITY OR AN EQUIVALENT NCHRP 350 TEST LEVEL 3 END TREATMENT.
6. ALL DIMENSIONS ARE IN MILLIMETERS UNLESS OTHERWISE NOTED.
7. 3M 340 LINEAR DELINEATION SYSTEM (LDS) OR EQUIVALENT REFLECTORS ARE PLACED 100 MM DOWN FROM THE TOP OF THE BARRIER, EVERY 20 METRES. THE COLOUR IS YELLOW FOR MEDIAN BARRIER.
8. THE LDS COLOUR IS WHITE WHEN THE BARRIER IS USED ON THE RIGHT SIDE OF THE ROAD

Manager Highway Planning and Design

Director Highway Engineering Services

Executive Director Highway Engineering and Construction

NOVA SCOTIA
Transportation and Infrastructure Renewal

No.	REVISION
3	LDS NOTES ADDED. MAR 2014
2	EMBEDDING DEPTH SHOWN
1	HS # ADDED TO TITLE

Scale :	N.T.S.
Drawn by :	M.LABRECHE
Checked by :	K.BODDY
Date of Plan :	AUG2009
File No. :	S–2009–022

JERSEY BARRIER
HS529

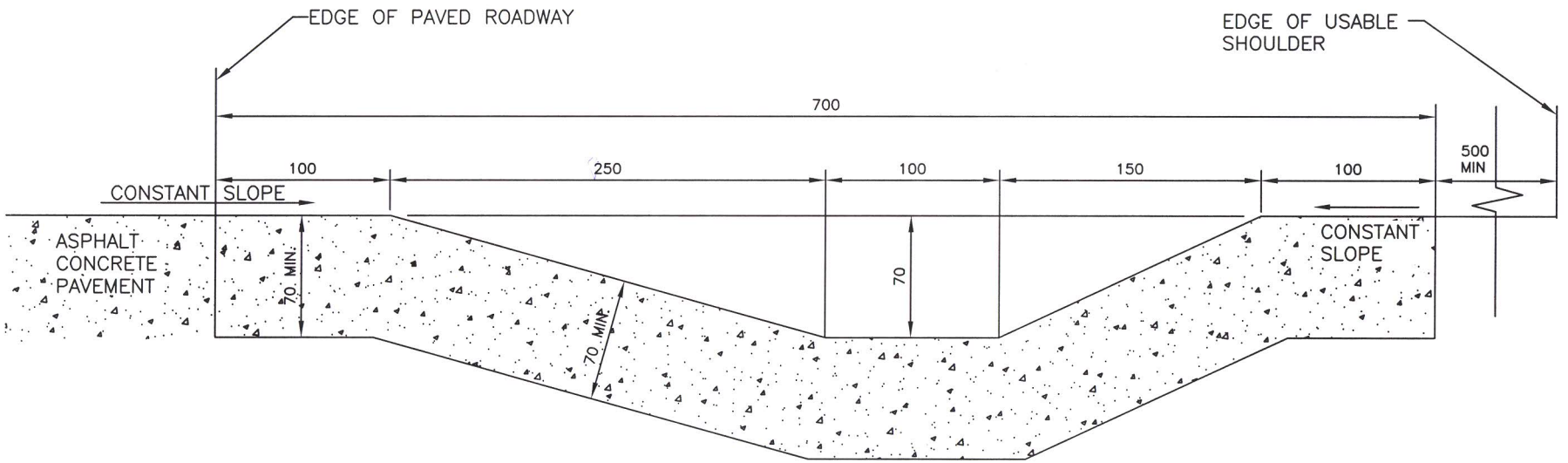

NOTES:
1. OFFTAKE GUTTERS ARE TO BE CONSTRUCTED AT LOCATIONS SPECIFIED BY THE ENGINEER AND ARE TO EXTEND TO THE EDGE OF SHOULDER AND DOWN THE SLOPE 1m MINIMUM.
2. ALL DIMENSIONS ARE IN MILLIMETRES UNLESS OTHERWISE NOTED.

Manager Highway Planning and Design

Director, Highway Engineering Services

Executive Director Highway Engineering and Construction

NOVA SCOTIA
Transportation and Infrastructure Renewal

No.	REVISION
1	HS # ADDED TO TITLE

Scale :	N.T.S.
Drawn by :	M.LABRECHE
Checked by :	K.BODDY
Date of Plan :	AUG2009
File No. :	S-2009-023

ASPHALT CONCRETE GUTTER HS-403

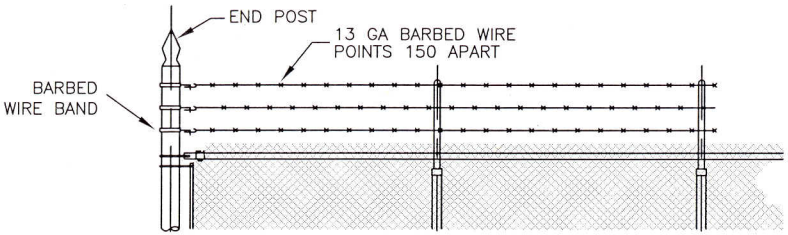

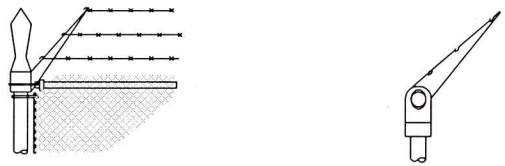

CORNER POST WITH BARBED WIRE ARM BARBED WIRE ARM

BARBED WIRE FOR CHAIN LINK FENCES

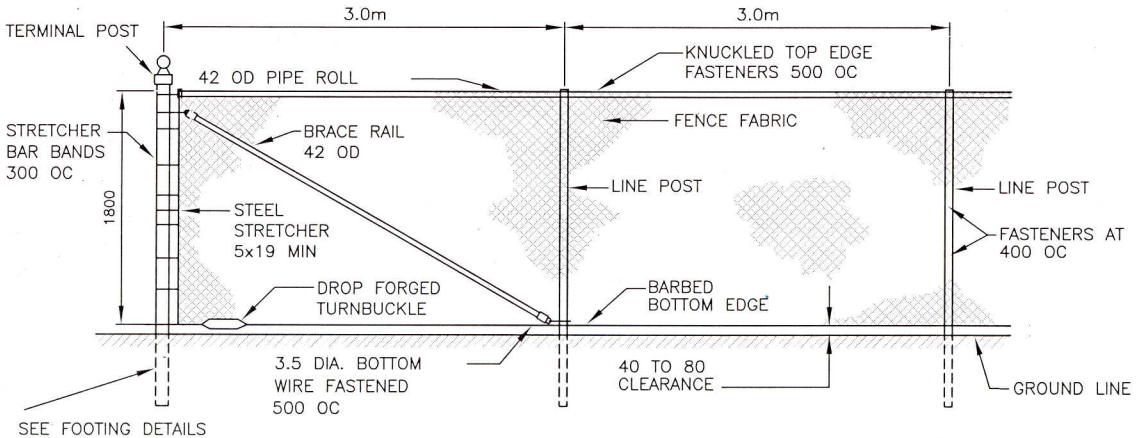

CHAIN LINK FENCE WITH TOP RAIL

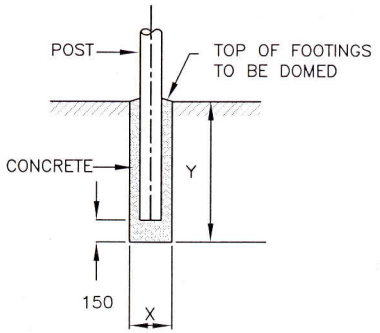

A: IN EARTH

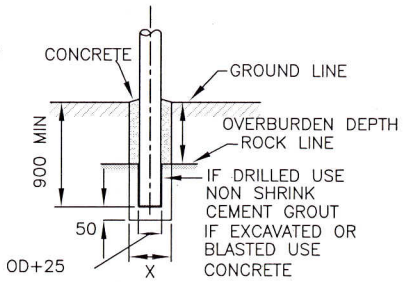

B: IN SHALE, LOOSE OR FRIABLE ROCK OR SOLID ROCK WHERE OVERBURDEN > 600

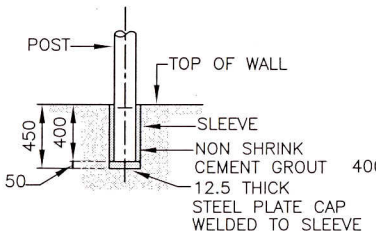

C: ON RETAINING WALL

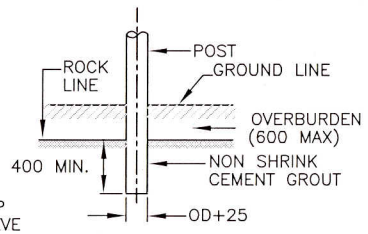

D: IN SOLID ROCK (OVERBURDEN < 600)

FOOTING DETAILS

POST DETAILS					
DESCRIPTION	OD (mm)	LENGTH [2]		DIM	
		STANDARD (m)	RETAINING WALLS (m)	X (mm)	Y (mm)
LINE	60	2.7	2.0	250	900
END, CORNER, STRAINING AND GATE (5.5m MAX OPENING)	89	3.2	2.3	350	1400
GATES (10m MAX OPENING)	114	3.3	–	450	1500

NOTES:
1. GATE LEAVES <= 1.8m WIDE REQUIRE HORIZONTAL BRACE ONLY, GATE LEAVES > 1.8m WIDE REQUIRE BOTH HORIZONTAL AND VERTICAL BRACES.
2. FOR FABRIC WIDTHS > 1.8m THE POST LENGTH SHALL BE INCREASED BY THE AMOUNT OF THE DIFFERENCE.
3. ALL DIMENSIONS ARE IN MILLIMETRES UNLESS OTHERWISE NOTED.

Manager Highway Planning and Design

Director Highway Engineering Services

Executive Director Highway Engineering and Construction

NOVA SCOTIA
Transportation and Infrastructure Renewal

No.	REVISION
1	HS # ADDED TO TITLE

Scale : N.T.S.
Drawn by : M.LABRECHE
Checked by : K.BODDY
Date of Plan : AUG2009
File No. : S-2009-024

FENCE FOR MISCELLANEOUS ROADWAY INSTALLATION HS-603

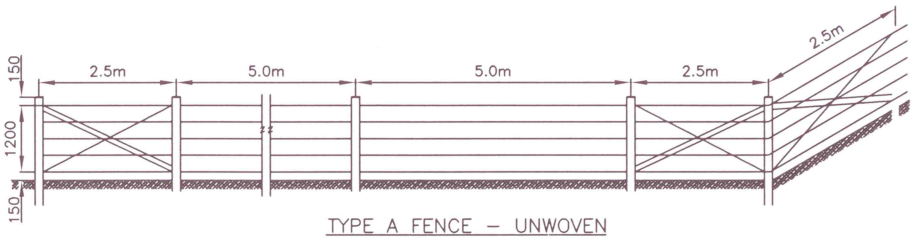

TYPE A FENCE – UNWOVEN
FIVE STRAND GALVANIZED WIRE

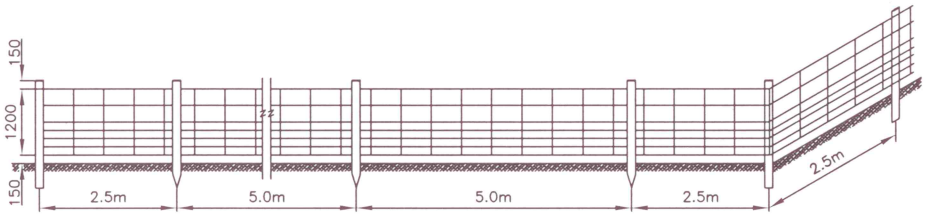

TYPE B FENCE – WOVEN MESH
SEVEN STRAND GALVANIZED WIRE

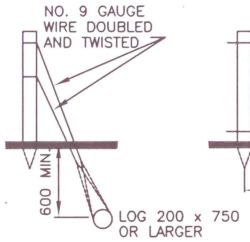

DEADMAN

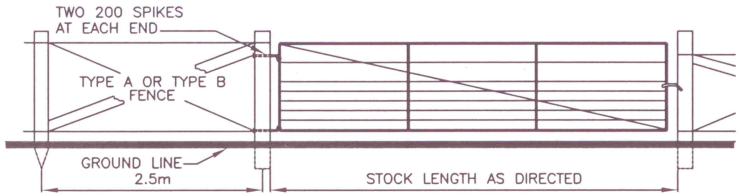

STEEL GATE

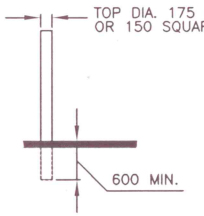

END, GATE AND
CORNER POSTS

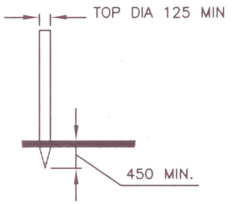

INTERMEDIATE
POSTS

NOTES:
1. THE SPACING OF POSTS AT ENDS, CORNERS AND GATES SHALL BE <= 2.5m. ALL OTHER POSTS SHALL BE SPACED <= 5.0m APART.
2. WIRES SHALL BE STRETCHED TAUT AND FASTENED SECURELY TO POSTS AS DIRECTED BY THE ENGINEER WITH APPROVED 40mm GALVANIZED STAPLES.
3. END, CORNER AND GATE POSTS SHALL BE FIRMLY BRACED WITH DIAGONALS EXTENDING FROM A POINT ON THE POST AT THE ELEVATION OF THE TOP FENCE WIRE TO A POINT ABOUT 150mm ABOVE THE GROUND LEVEL ON THE ADJACENT POST.
4. POSTS SHALL BE SLIGHTLY FLATTENED AT THE JUNCTION WITH THE BRACE.
5. MINIMUM CROSS SECTION OF BRACES SHALL BE 125mm DIAMETER OR 100mm SQUARE.
6. STAY WIRES SHALL BE FASTENED SECURELY TO EACH POST WITH 40mm GALVANIZED STAPLES AND TWISTED TOGETHER TAUT.
7. DOUBLE STAY WIRES NO. 9 GAUGE (PLAIN) SHALL BE STRETCHED FROM A POINT ABOUT 150mm ABOVE THE GROUND LEVEL ON END, GATE AND CORNER POSTS TO A POINT ON THE ADJACENT POST AT THE ELEVATION OF THE TOP FENCE WIRE.
8. POST LENGTHS: FOR FABRIC WIDTHS > 1.8m THE POST SHALL BE INCREASED BY THE AMOUNT OF THE DIFFERENCE.
9. ALL DIMENSIONS ARE IN MILLIMETRES UNLESS OTHERWISE NOTED.

Manager Highway Planning and Design

Director Highway Engineering Services

Executive Director Highway Engineering and Construction

NOVA SCOTIA
Transportation and Infrastructure Renewal

No.	REVISION
1	HS # ADDED TO TITLE

Scale :	N.T.S
Drawn by :	M.LABRECHE
Checked by :	K.BODDY
Date of Plan :	AUG2009
File No. :	S–2009–025

RIGHT-OF-WAY FENCE
HS-601

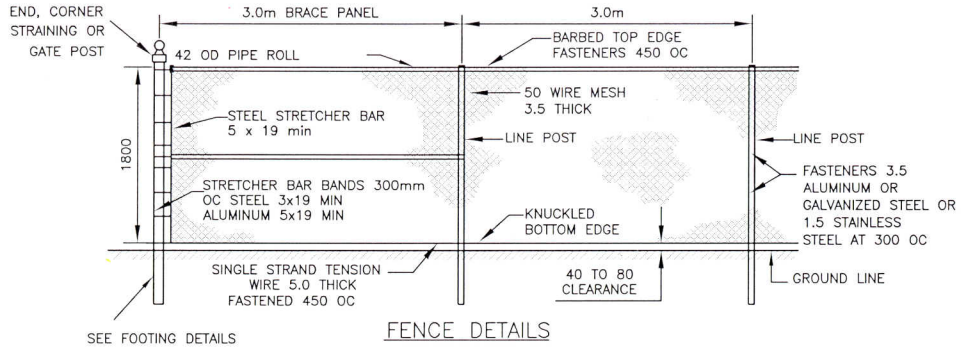

FENCE DETAILS

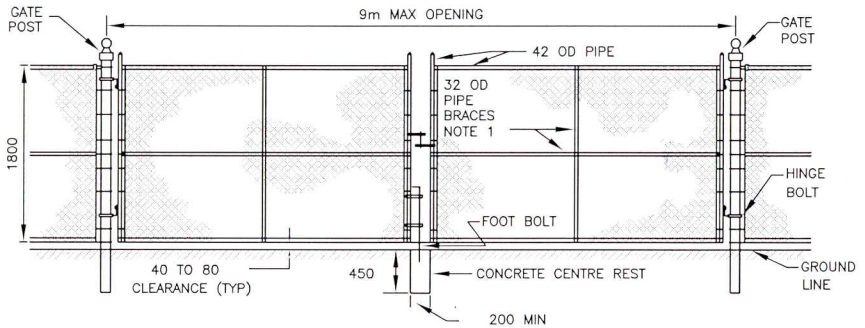

DOUBLE GATE

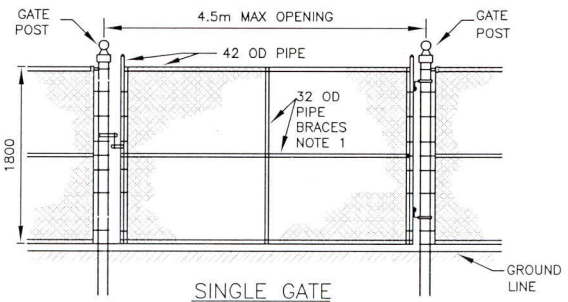

SINGLE GATE

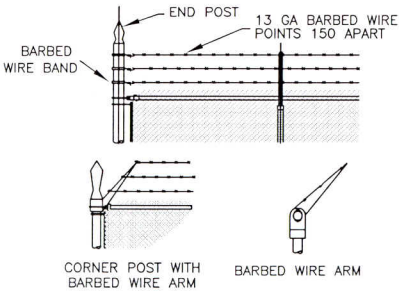

BARBED WIRE FOR CHAIN LINK FENCES

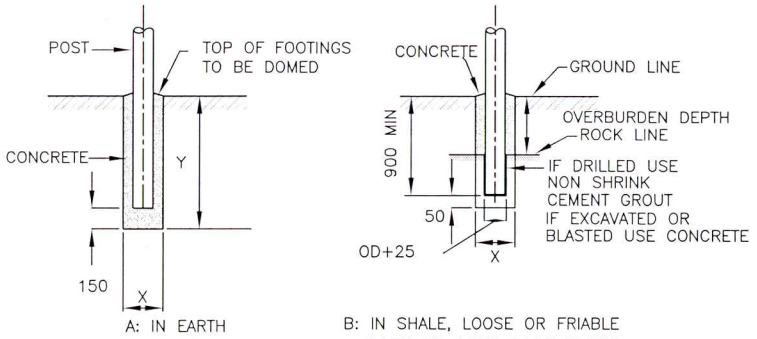

FOOTING DETAILS

POST DETAILS					
DESCRIPTION	OD (mm)	LENGTH[2]		DIM	
		STANDARD (m)	RETAINING WALLS (m)	X (mm)	Y (mm)
LINE	60	2.7	2.0	250	900
END, CORNER, STRAINING AND GATE (5.5m MAX OPENING)	89	3.2	2.3	350	1400
GATES (10m MAX OPENING)	114	3.3	–	450	1500

NOTES:
1. GATE LEAVES <= 1.8m WIDE REQUIRE HORIZONTAL BRACE ONLY, GATE LEAVES > 1.8m WIDE REQUIRE BOTH HORIZONTAL AND VERTICAL BRACES.
2. FOR FABRIC WIDTHS > 1.8m THE POST LENGTH SHALL BE INCREASED BY THE AMOUNT OF THE DIFFERENCE.
3. ALL DIMENSIONS ARE IN MILLIMETRES UNLESS OTHERWISE NOTED.

Manager Highway Planning and Design

Director Highway Engineering Services

Executive Director Highway Engineering and Construction

NOVA SCOTIA
Transportation and Infrastructure Renewal

No.	REVISION
1	HS # ADDED TO TITLE

Scale : N.T.S.
Drawn by : M.LABRECHE
Checked by : K.BODDY
Date of Plan : AUG2009
File No. : S-2009-026

SECURITY FENCE
HS-602

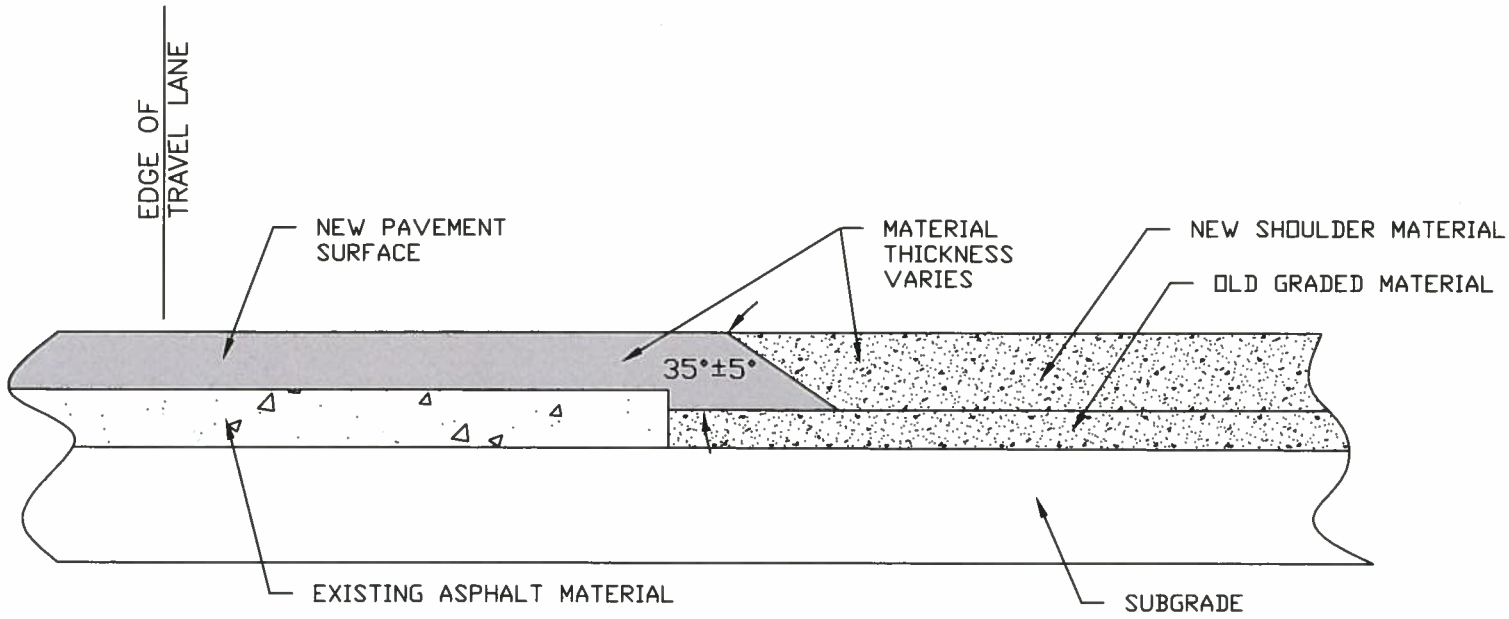

NOTES:
1. STANDARD CROSS-SECTION AS PER TIR HIGHWAY DESIGN GUIDELINES

Manager Highway Planning and Design

Director Highway Engineering Services

Executive Director Highway Engineering and Construction

NOVA SCOTIA
Transportation and Infrastructure Renewal

No.	REVISION

Scale :	N.T.S.
Drawn by :	C.DOYLE
Checked by :	K.BODDY
Date of Plan :	MAY_2014
File No. :	S-2009-028

ASPHALT TAPERED EDGE DETAIL

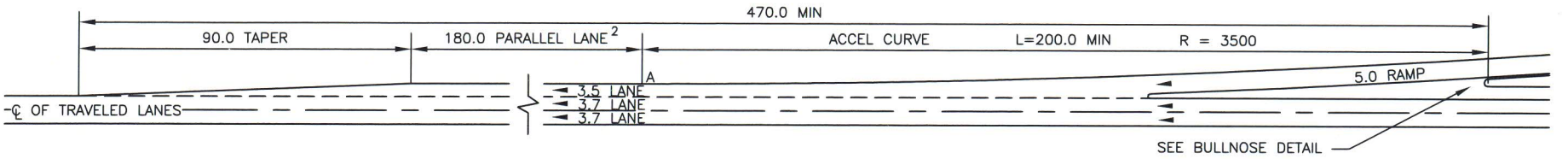

ACCELERATION LANE

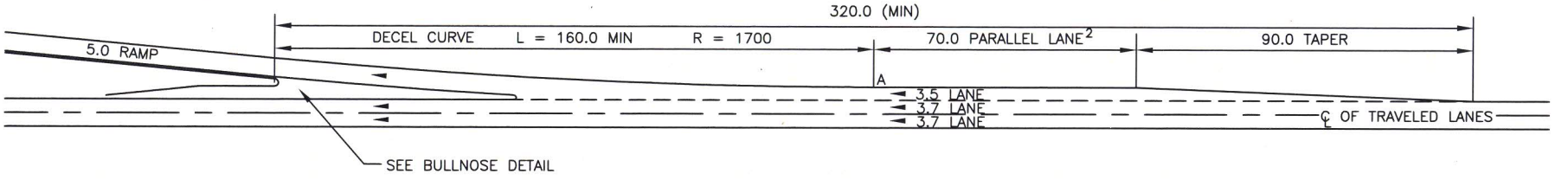

DECELERATION LANE

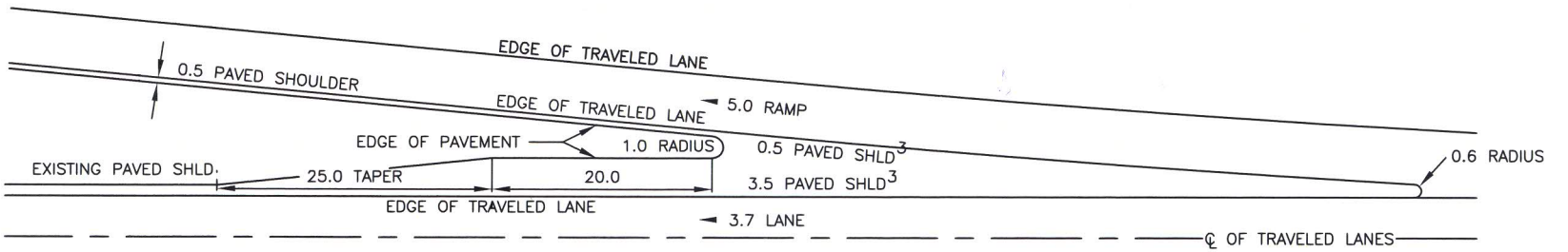

BULLNOSE DETAIL

NOT TO SCALE

NOTES:
1. THE SPEED CHANGE LANES SHOWN ARE FOR DESIGN SPEEDS OF 110km/h FOR THE MAJOR HIGHWAY AND 50km/h FOR THE RAMP.
2. FOR GRADES LESS THAN 3% AND WILL VARY DEPENDING ON THE GRADE CONDITIONS OF THE MAJOR ROAD.
3. FOR CURVILINEAR MAJOR ROAD ALIGNMENTS, OFFSET DISTANCES TO BE MAINTAINED, MINIMUM LONGITUDINAL DISTANCES TO BE ACHIEVED BY VARYING THE RADII OF THE ACCELERATION OR DECELERATION CURVES AND ROUNDING THE CURVE RADII TO THE NEAREST 5.0m.
4. CONTROL LINE FOR SPEED CHANGE LANE AND RAMP SHOULD BE OUTSIDE EDGE OF TRAVEL LANE, BEGINNING/ENDING AT "A".
5. ALL DIMENSIONS ARE IN METRES UNLESS OTHERWISE NOTED

NOVA SCOTIA
Transportation and Infrastructure Renewal

No.	REVISION
2	BULLNOSE DETAIL RADII ADDED – MAR 2014
1	NOTE 1 REVISED TO 110 KM/HR – APR 10

Scale : N.T.S.
Drawn by : M.LABRECHE
Checked by : K.BODDY
Date of Plan : AUG2009
File No. : S–2009–030

Manager Highway Planning and Design

Director Highway Engineering Services

Executive Director Highway Engineering and Construction

ACCELERATION-DECELERATION LANE FOR RAMP TERMINALS

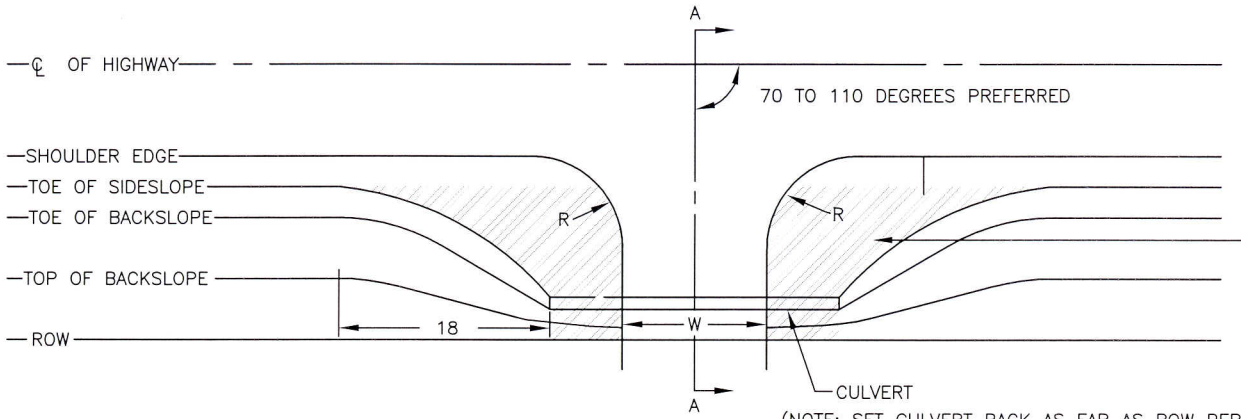

SIDE SLOPES TRANVERSE TO THE ROAD ARE TO BE 1V:6H MAX.

STEEPER SLOPES MAY BE CONSIDERED ON LOW VOLUME AND/OR LOW SPEED ROADS OR IN AREAS OUTSIDE THE CLEAR ZONE.

(NOTE: SET CULVERT BACK AS FAR AS ROW PERMITS.)

DRIVEWAY WIDTH, W	INTERSECTION RADIUS, R
5.5	10.0
10.0	15.0

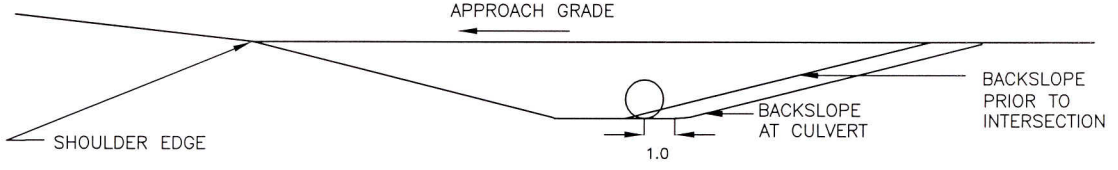

WIDEN DITCHES ONLY WHERE CULVERTS ARE TO BE INSTALLED.

SECTION A–A

APPROACH GRADES
1%–2% DESIRABLE 0.5% MINIMUM 6.0% MAXIMUM MAX 4% DIFFERENCE BETWEEN HIGHWAY CROSS SLOPE AND APPROACH GRADE.

NOTES:
1. CULVERT INLETS/OUTLETS INCLUDING HEADWALLS TO BE TAPERED FLUSH WITH SIDE SLOPES.
2. CULVERT INVERT TO BE INSTALLED MINIMUM 25mm BELOW DITCH GRADE.
3. MINIMUM 300mm DEPTH OF COVER OVER CULVERT.
4. MINIMUM TYPE 1 – CRUSHED GRAVEL SURFACING AT 50mm THICKNESS.
5. ALL DIMENSIONS ARE IN METRES UNLESS OTHERWISE NOTED.

Manager Highway Planning and Design

Director Highway Engineering Services

Executive Director Highway Engineering and Construction

NOVA SCOTIA
Transportation and Infrastructure Renewal

No.	REVISION

Scale : N.T.S.
Drawn by : M.LABRECHE
Checked by : K.BODDY
Date of Plan : AUG2009
File No. : S–2009–032

DRIVEWAY ENTRANCE

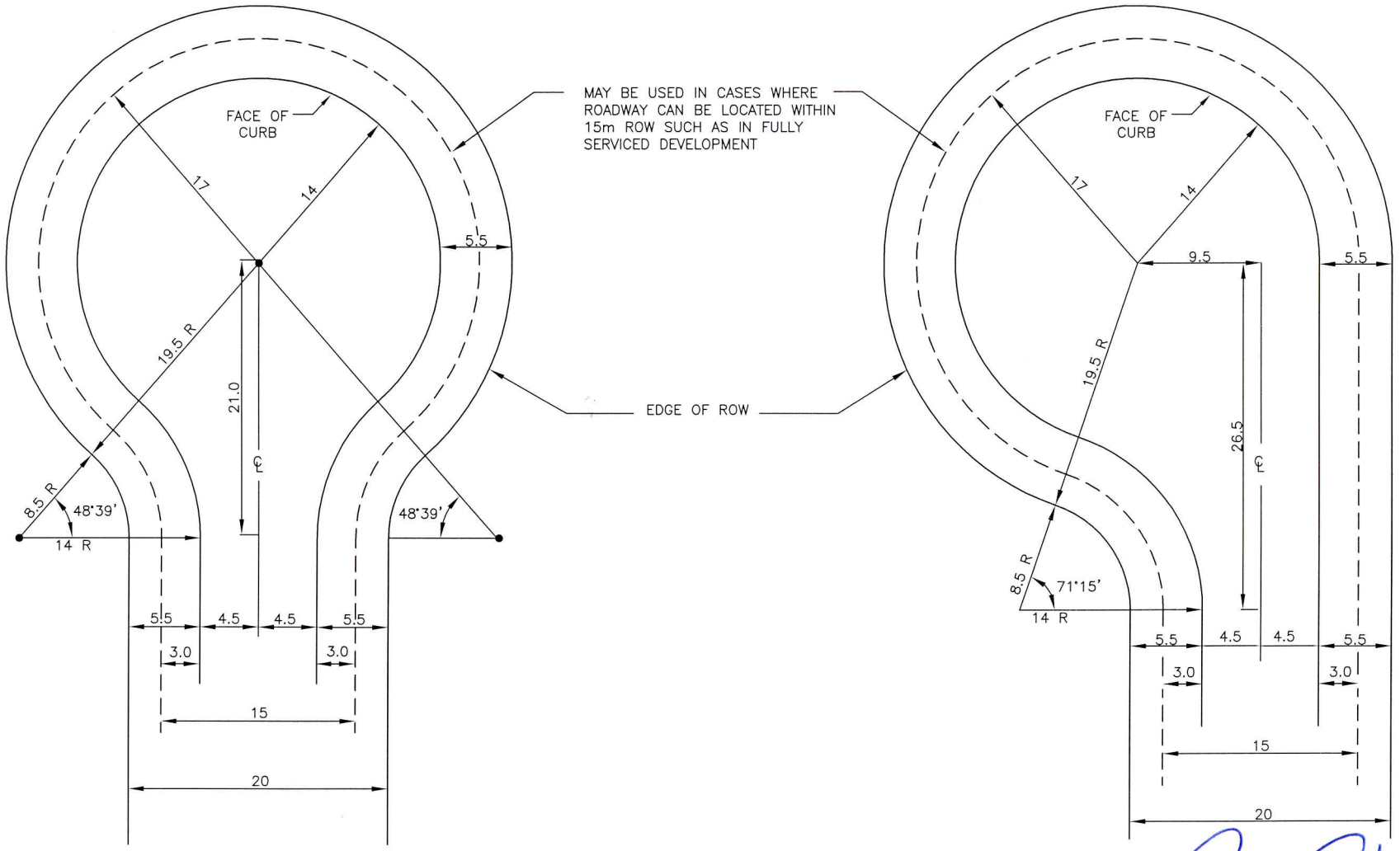

NOTES:
1. ALL DIMENSIONS ARE IN METRES UNLESS OTHERWISE NOTED.

Manager Highway Planning and Design

Director Highway Engineering Services

Executive Director Highway Engineering and Construction

NOVA SCOTIA
Transportation and Infrastructure Renewal

No.	REVISION

Scale : N.T.S.
Drawn by : M.LABRECHE
Checked by : K.BODDY
Date of Plan : AUG2009
File No. : S-2009-033

CULS-DE-SAC

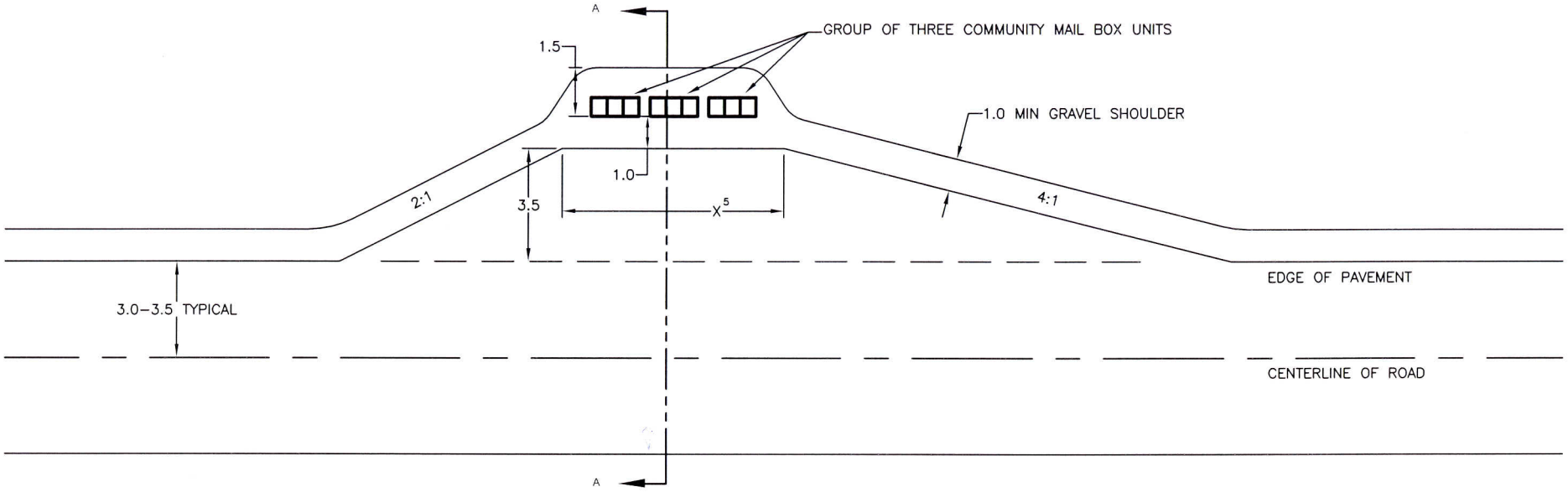

PLAN VIEW

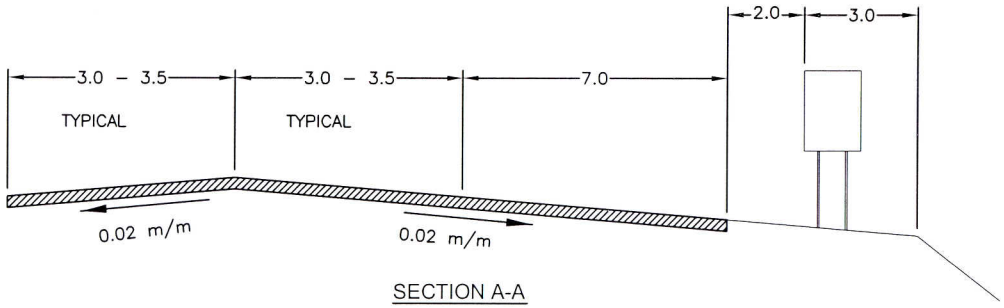

SECTION A-A

NOTES:
1. THE PULLOFF MUST BE PAVED.
2. A DITCH CULVERT MUST BE PROVIDED WHERE REQUIRED.
3. APPLIES ONLY FOR LINEAR MAILBOX INSTALLATIONS.
4. DOES NOT APPLY FOR MAIL KIOSK AREAS.
5. EACH COMMUNITY MAIL BOX UNIT HAS THREE MODULES (ON TWO SETS OF LEGS). THE MAIL SLOT CAPACITY OF EACH UNIT IS ABOUT 38 SLOTS (FOR 1–3 UNITS, X = 7m; FOR 4–6, X = 14m; 7–9, X = 21m; etc.)
6. ALL DIMENSIONS ARE IN METRES UNLESS OTHERWISE NOTED.

Manager Highway Planning and Design

Director Highway Engineering Services

Executive Director Highway Engineering and Construction

NOVA SCOTIA
Transportation and Infrastructure Renewal

No.	REVISION

Scale : N.T.S.
Drawn by : D.CROSS
Checked by : K.BODDY
Date of Plan : AUG2009
File No. : S–2009–034

COMMUNITY MAILBOX
ROADSIDE TREATMENT - PAVED ROADS

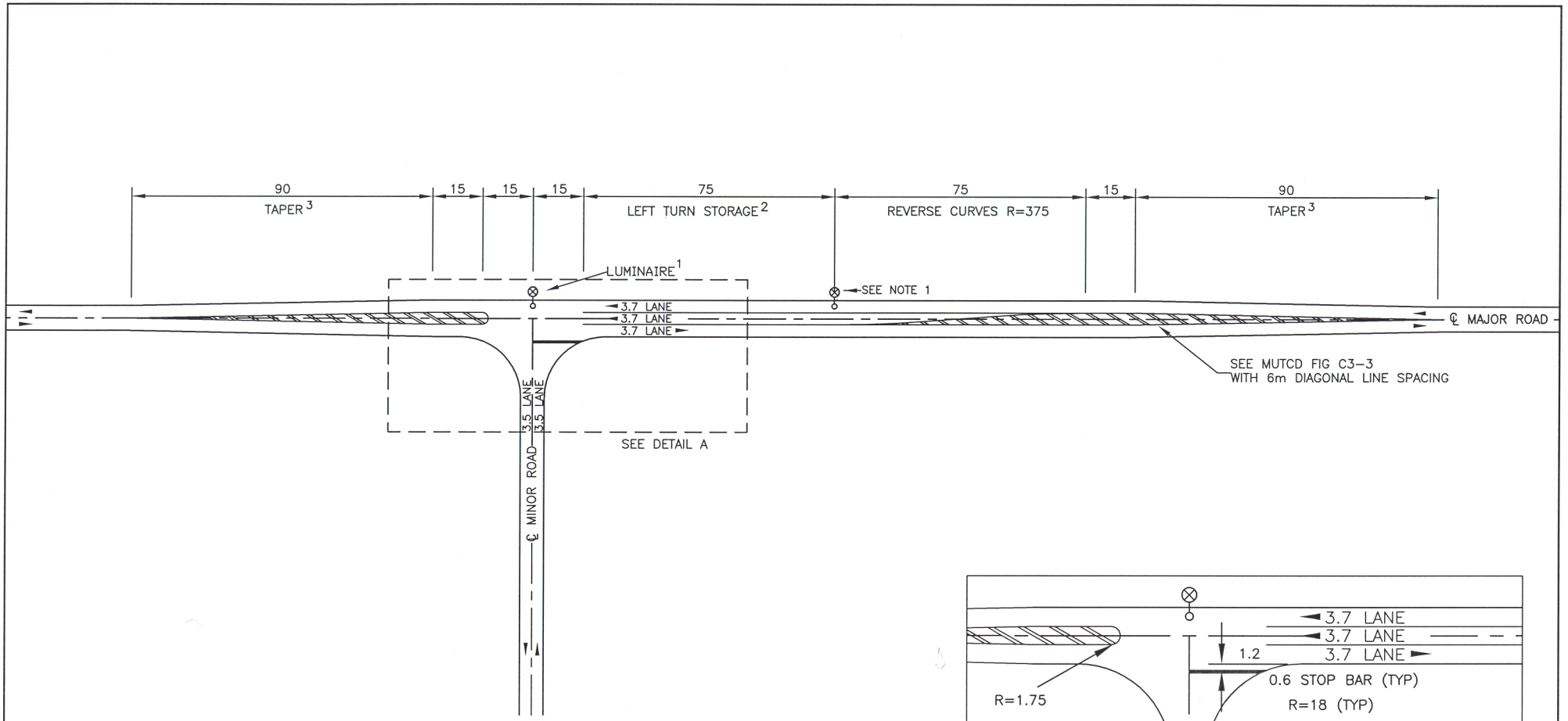

DETAIL A

NOTES:
1. 250 WATT, HIGH PRESSURE, SODIUM LUMINAIRE WITH A MOUNTING HEIGHT OF 12.2m. LIGHT POLES ARE TO BE LOCATED ON THE SHOULDER ROUNDING.
2. LENGTH MAY BE VARIED TO REFLECT SITE SPECIFIC DESIGN REQUIREMENTS.
3. MAY BE SHORTENED DEPENDING ON DESIGN SPEED OF MAJOR ROAD.
4. ALL DIMENSIONS ARE IN METERS UNLESS OTHERWISE NOTED.

Manager Highway Planning and Design

Director Highway Engineering Services

Executive Director Highway Engineering and Construction

NOVA SCOTIA
Transportation and Infrastructure Renewal

No.	REVISION

Scale : N.T.S.
Drawn by : J.MACINTOSH
Checked by : K.BODDY
Date of Plan : AUG2009
File No. : S-2009-035

'T' INTERSECTION
SCHOOL BUS OR WB-12 DESIGN VEHICLE

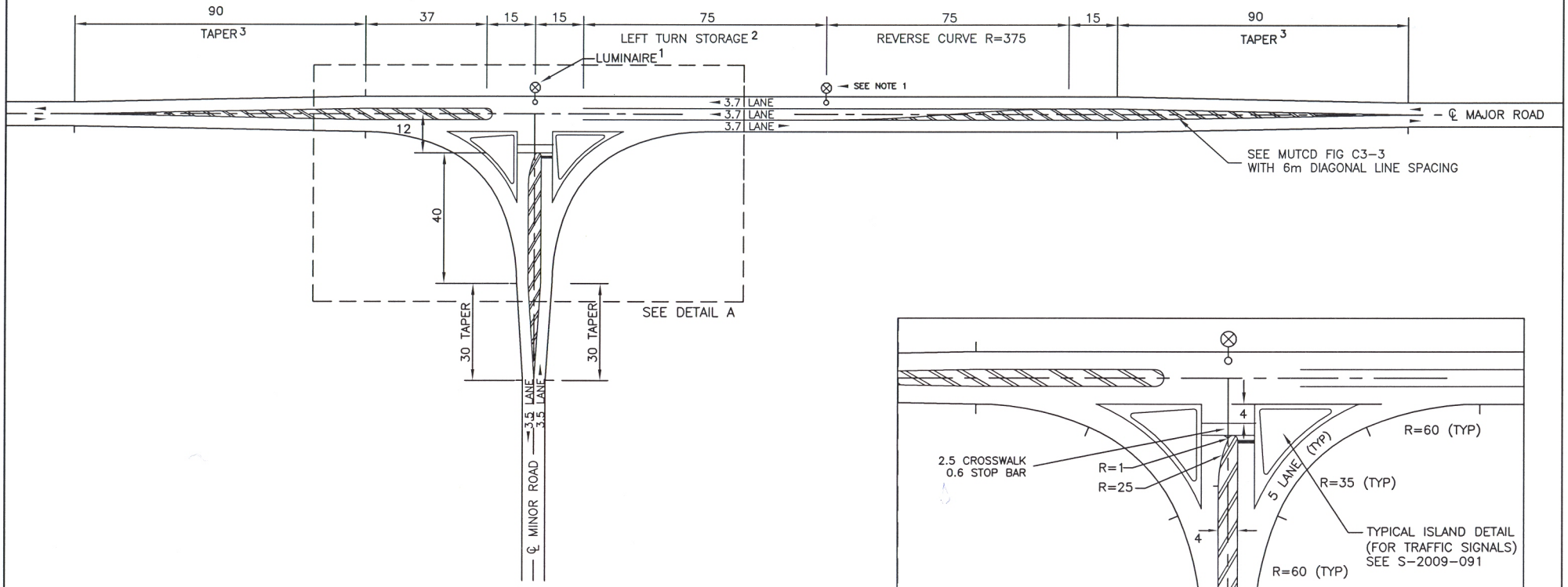

DETAIL A

NOTES:
1. 250 WATT, HIGH PRESSURE, SODIUM LUMINAIRE WITH A MOUNTING HEIGHT OF 12.2m. LIGHT POLES ARE TO BE LOCATED ON THE SHOULDER ROUNDING.
2. LENGTH MAY BE VARIED TO REFLECT SITE SPECIFIC DESIGN REQUIREMENTS.
3. MAY BE SHORTENED DEPENDING ON DESIGN SPEED OF MAJOR ROAD.
4. ALL DIMENSIONS ARE IN METRES UNLESS OTHERWISE NOTED.

NOVA SCOTIA
Transportation and Infrastructure Renewal

No.	REVISION

Scale : N.T.S.
Drawn by : J.MACINTOSH
Checked by : K.BODDY
Date of Plan : AUG2009
File No. : S-2009-036

Manager Highway Planning and Design

Director Highway Engineering Services

Executive Director Highway Engineering and Construction

CHANNELIZED 'T' INTERSECTION WB-21 DESIGN VEHICLE

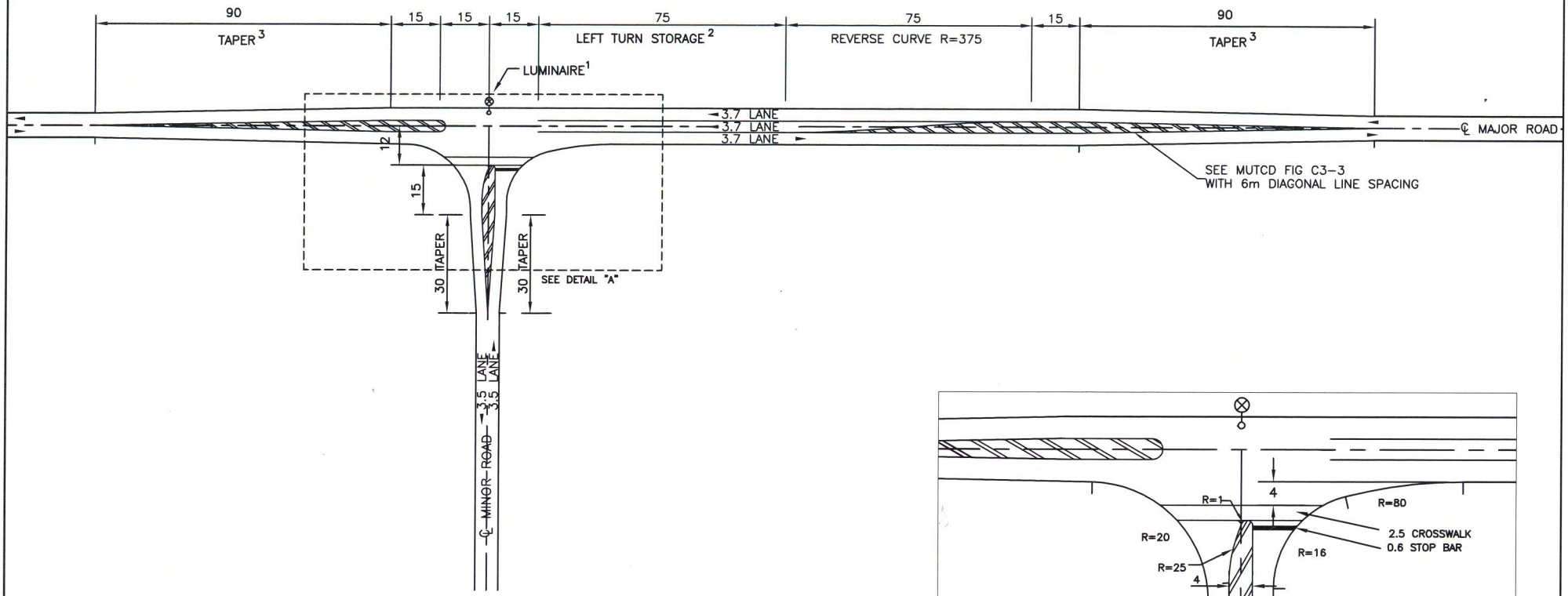

DETAIL "A"

NOTES:
1. 250 WATT HIGH PRESSURE SODIUM LUMINAIRE WITH A MOUNTING HEIGHT OF 12.2m. LIGHT POLES ARE TO BE LOCATED ON THE SHOULDER ROUNDING.
2. LENGTH MAY BE VARIED TO REFLECT SITE SPECIFIC DESIGN REQUIREMENTS.
3. MAY BE SHORTENED DEPENDING ON DESIGN SPEED OF MAJOR ROAD.
4. ALL DIMENSIONS ARE IN METRES UNLESS OTHERWISE NOTED.

Manager Highway Planning and Design

Director Highway Engineering Services

Executive Director Highway Engineering and Construction

NOVA SCOTIA
Transportation and Infrastructure Renewal

No.	REVISION
1	ISLAND WIDTH ADDED – MAR 2014

Scale : N.T.S.
Drawn by : J.MACINTOSH
Checked by : K.BODDY
Date of Plan : AUG2009
File No. : S-2009-037

'T' INTERSECTION
WB-21 DESIGN VEHICLE

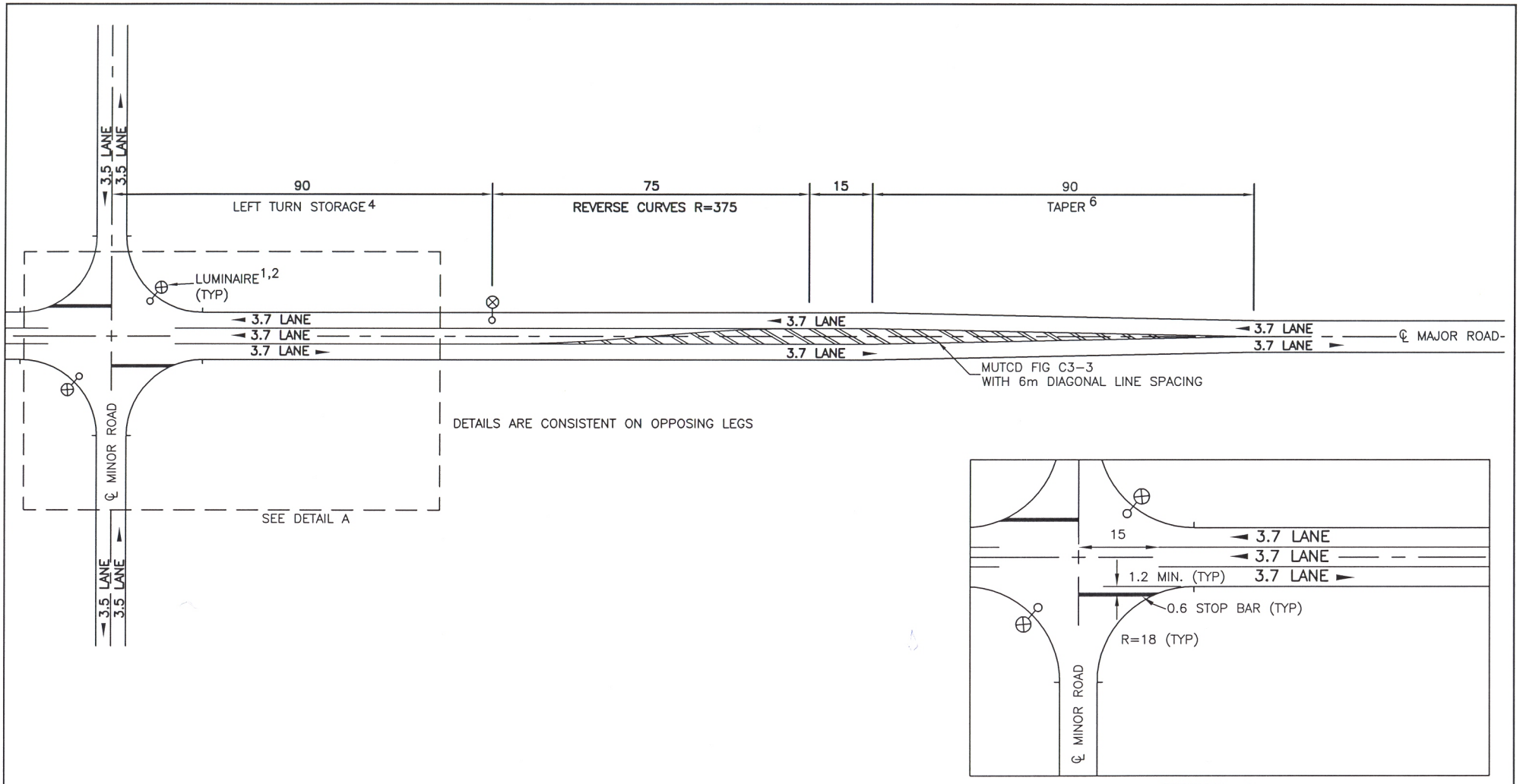

DETAIL A

NOTES:
1. 250 WATT HIGH PRESSURE SODIUM LUMINAIRE WITH A MOUNTING HEIGHT OF 12.2 METRES. LIGHT POLES ARE TO BE LOCATED ON THE SHOULDER ROUNDING. POLE BASE LOCATION AND ORIENTATION SHALL BE AS SHOWN.
2. TYPICAL DELINEATION LIGHTING LOCATIONS. TWO LUMINAIRES ARE REQUIRED WHERE ROAD WIDTH EXCEEDS THREE LANES ON ANY APPROACH. ORIENT LUMINAIRES DIAGIONALLY ACROSS THE WIDEST DIMENSION OF THE INTERSECTION.
3. FOR FURTHER LIGHTING DETAILS SEE FILE NUMBERS: S-2009-094, S-2009-111 THROUGH S-2009-116.
4. LENGTH MAY VARY TO REFLECT SITE SPECIFIC DESIGN REQUIREMENTS.
5. WIDENING FOR LEFT TURN LANE CAN BE ON ONE SIDE OF CENTERLINE, DEPENDING ON AVAILABLE RIGHT OF WAY, ADJACENT LAND DEVELOPMENT, AND HORIZONTAL ALIGNMENT OF MAJOR ROAD.
6. MAY BE SHORTENED DEPENDING ON DESIGN SPEED OF MAJOR ROAD.
7. ALL DIMENSIONS ARE IN METERS UNLESS OTHERWISE NOTED.

NOVA SCOTIA
Transportation and Infrastructure Renewal

No.	REVISION

Scale :	N.T.S.
Drawn by :	J.MACINTOSH
Checked by :	K.BODDY
Date of Plan :	AUG2009
File No. :	S-2009-038

Manager Highway Planning and Design

Director Highway Engineering Services

Executive Director Highway Engineering and Construction

'FOUR-LEG' INTERSECTION
SCHOOL BUS OR WB-12 DESIGN VEHICLE

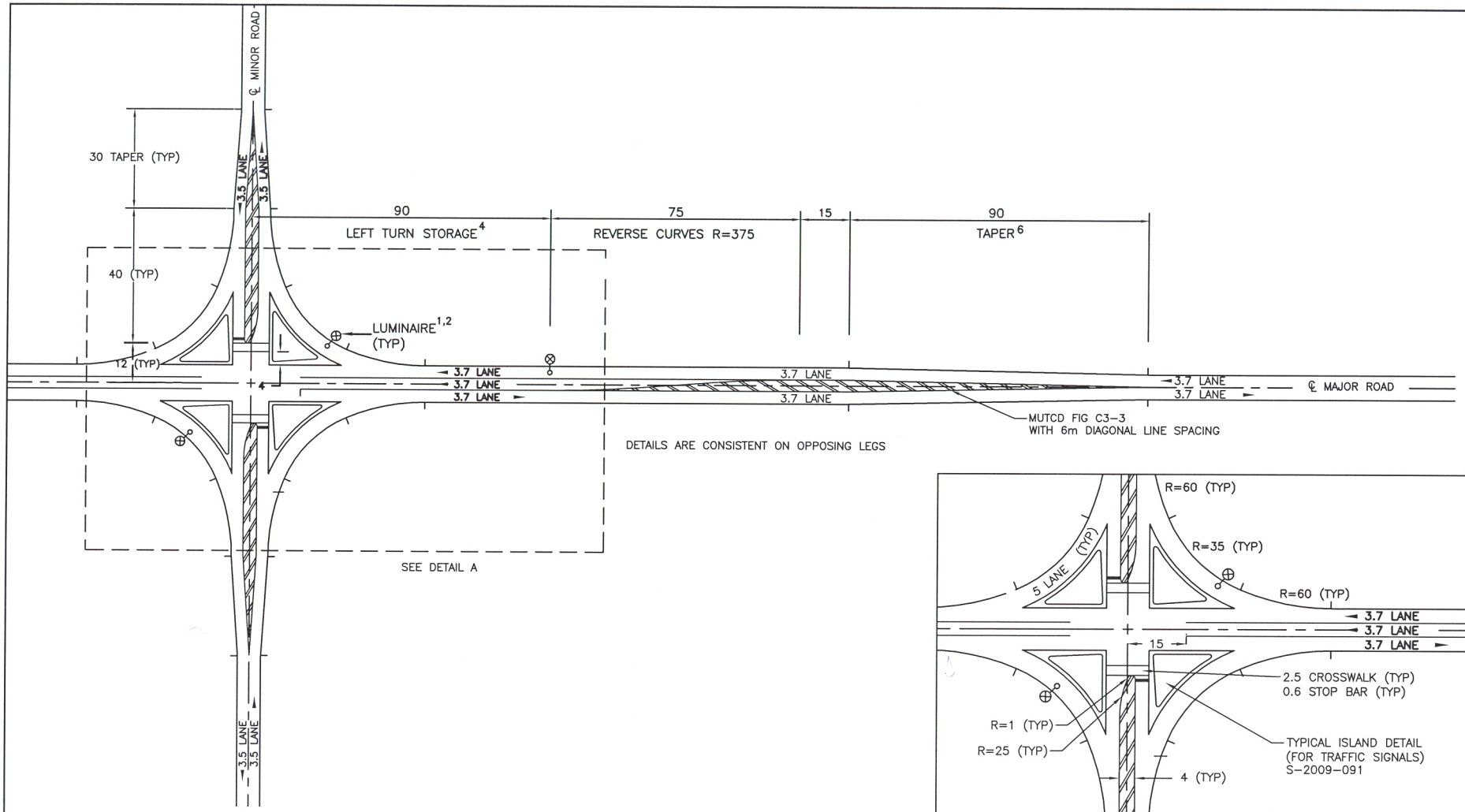

DETAIL A

NOTES:
1. 250 WATT, HIGH PRESSURE, SODIUM LUMINAIRE WITH MOUNTING HEIGHT OF 12.2m. LIGHT POLES ARE TO BE LOCATED ON SHOULDER ROUNDING. POLE BASE LOCATION AND ORIENTATION SHALL BE AS SHOWN.
2. TYPICAL DELINEATION LIGHTING LOCATIONS. TWO LUMINAIRES ARE REQUIRED WHERE ROAD WIDTH EXCEEDS THREE LANES ON ANY APPROACH. ORIENT LUMINAIRES DIAGONALLY ACROSS THE WIDEST DIMENSION OF THE INTERSECTION.
3. FOR FURTHER LIGHTING DETAILS SEE FILE NUMBERS: S-2009-094, S-2009-111 THROUGH S-2009-116.
4. LENGTH MAY VARY TO REFLECT SITE SPECIFIC DESIGN REQUIREMENTS.
5. WIDENING FOR LEFT TURN LANE CAN BE ON ONE SIDE OF CENTERLINE, DEPENDING ON AVAILABLE RIGHT OF WAY, ADJACENT LAND DEVELOPMENT, AND HORIZONTAL ALIGNMENT OF MAJOR ROAD.
6. MAY BE SHORTENED DEPENDING ON DESIGN SPEED OF MAJOR ROAD.
7. FOR LANE WIDTHS BY CLASSIFICATION SEE S-2008-001A.
8. ALL DIMENSIONS ARE IN METERS UNLESS OTHERWISE NOTED.

NOVA SCOTIA
Transportation and Infrastructure Renewal

No.	REVISION

Scale :	N.T.S.
Drawn by :	M.LABRECHE
Checked by :	K.BODDY
Date of Plan :	AUG2009
File No. :	S-2009-039

Manager Highway Planning and Design

Director Highway Engineering Services

Executive Director Highway Engineering and Construction

CHANNELIZED 'FOUR-LEG' INTERSECTION
WB-21 DESIGN VEHICLE

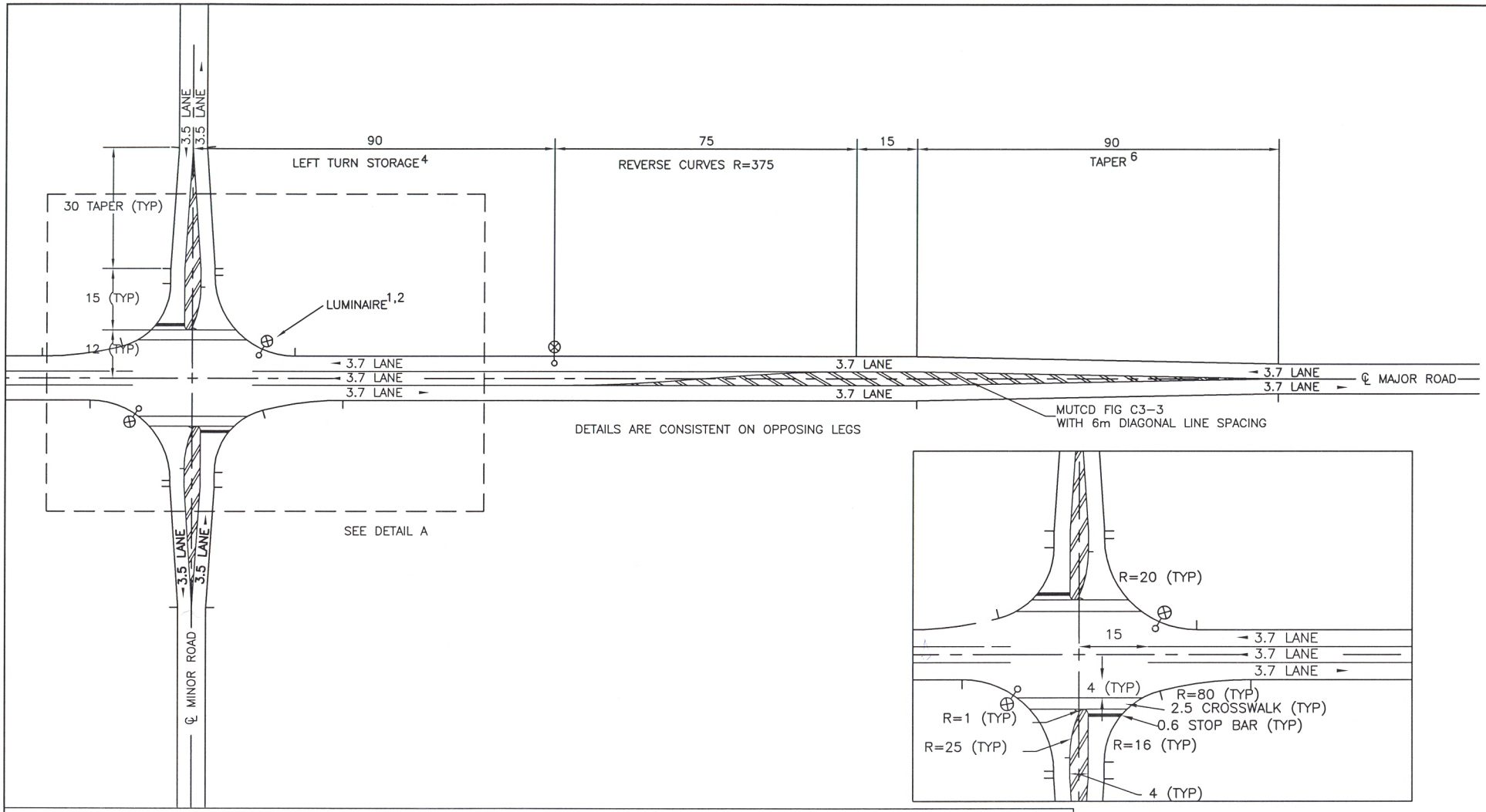

DETAIL A

NOTES:
1. 250 WATT, HIGH PRESSURE, SODIUM LUMINAIRE WITH MOUNTING HEIGHT OF 12.2 METERS. LIGHT POLES ARE TO BE LOCATED ON SHOULDER ROUNDING. POLE BASE LOCATION AND ORIENTATION SHALL BE AS SHOWN.
2. TYPICAL DELINEATION LIGHTING LOCATIONS. TWO INTERSECTION LUMINAIRES ARE REQUIRED WHERE ROAD WIDTH EXCEEDS THREE LANES ON ANY APPROACH. ORIENT LUMINAIRES DIAGONALLY ACROSS THE WIDEST DIMENSION OF THE INTERSECTION.
3. FOR FURTHER LIGHTING DETAILS SEE FILE NUMBERS: S-2009-094, S-2009-111 THROUGH S-2009-116.
4. LENGTH MAY VARY TO REFLECT SITE SPECIFIC DESIGN REQUIREMENTS.
5. WIDENING FOR LEFT TURN LANE CAN BE ON ONE SIDE OF CENTERLINE, DEPENDING ON AVAILABLE RIGHT OF WAY, ADJACENT LAND DEVELOPMENT, AND HORIZONTAL ALIGNMENT OF MAJOR ROAD.
6. MAY BE SHORTENED DEPENDING ON DESIGN SPEED OF MAJOR ROAD.
7. ALL DIMENSIONS ARE IN METERS UNLESS OTHERWISE NOTED.

NOVA SCOTIA
Transportation and Infrastructure Renewal

No.	REVISION

Scale :	N.T.S.
Drawn by :	J.MACINTOSH
Checked by :	K.BODDY
Date of Plan :	AUG2009
File No. :	S-2009-040

Manager Highway Planning and Design

Director Highway Engineering Services

Executive Director Highway Engineering and Construction

'FOUR-LEG' INTERSECTION WB-21 DESIGN VEHICLE

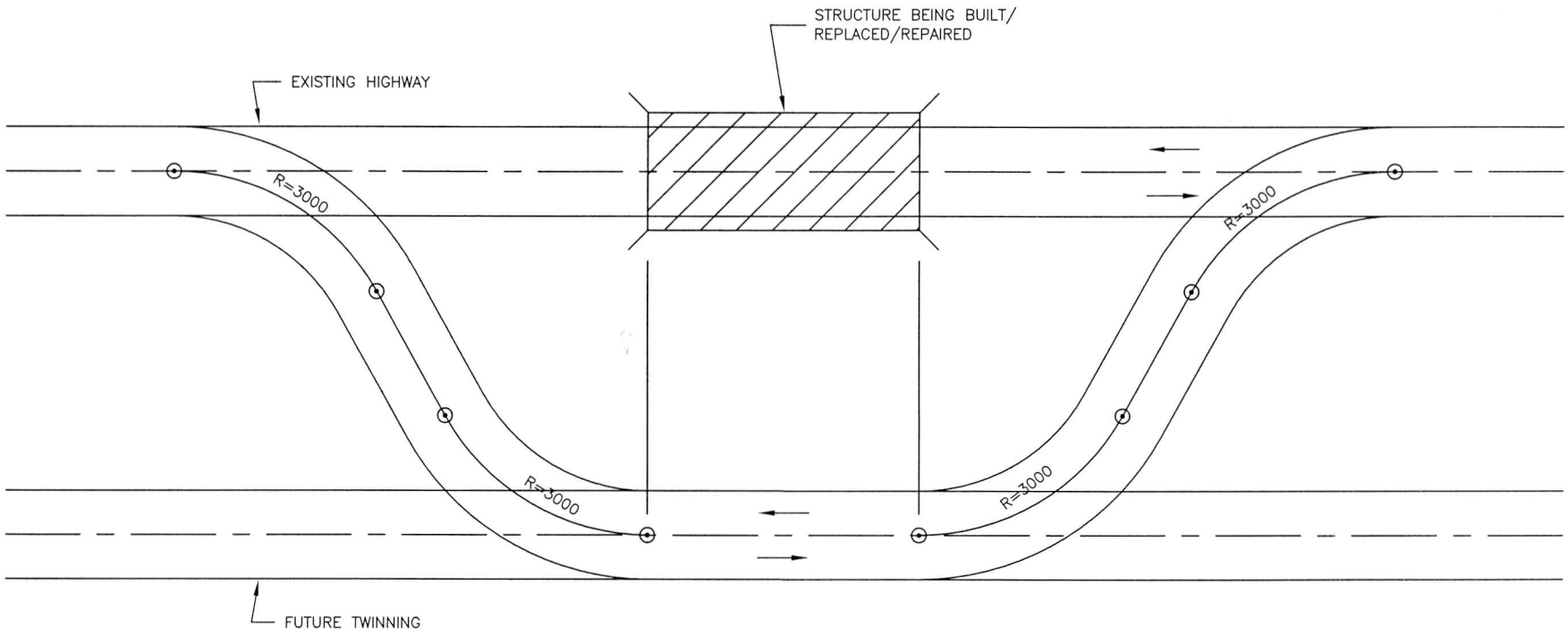

NOTES:
1. TEMPORARY DETOUR:
   - 80 km/hr
   - NORMAL CROWN CROSS-SECTION
   - SEE SEPARATE SIGNING PLAN THAT SHOULD ACCOMPANY THIS PLAN
2. ALL DIMENSIONS ARE IN METRES UNLESS OTHERWISE NOTED.

Manager Highway Planning and Design

Director Highway Engineering Services

Executive Director Highway Engineering and Construction

NOVA SCOTIA
Transportation and Infrastructure Renewal

No.	REVISION

Scale : N.T.S.
Drawn by : M.ANDERSON
Checked by : K.BODDY
Date of Plan : AUG2009
File No. : S-2009-041

TEMPORARY DETOUR FUTURE TWINNING

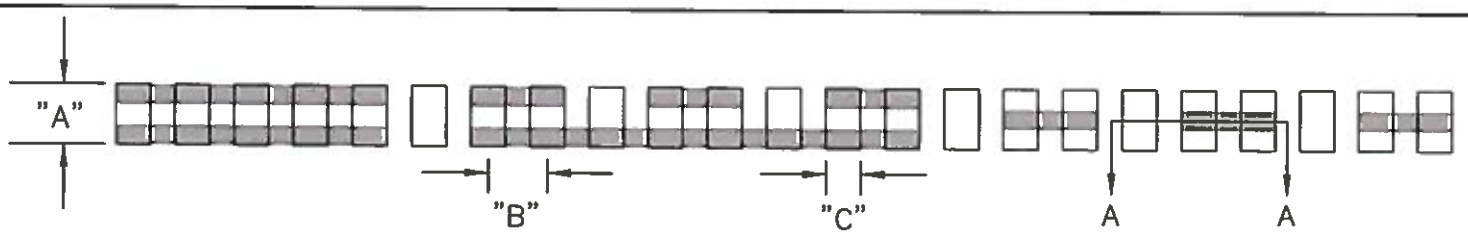

NOTES:
"A"–STRIP WIDTH (TRANSVERSE TO DIRECTION OF TRAVEL) 300mm
"B"–CENTRE TO CENTRE SPACING OF STRIPS 300mm
"C"–STRIP LENGTH (LONGITUDE TO DIRECTION OF TRAVEL) 175mm ±25mm
"D" STRIP DEPTH 8mm ± 2mm
"E"–STRIP SHAPE – ROUNDED

SECTION A–A

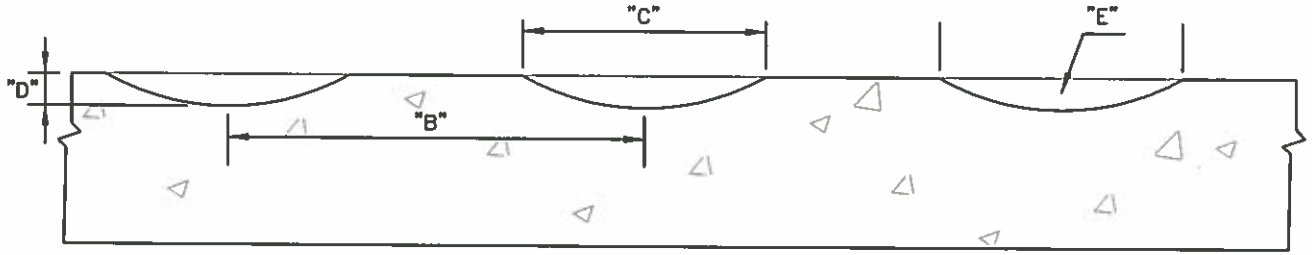

NTS

BRIDGE/ OVERPASS STRUCTURE

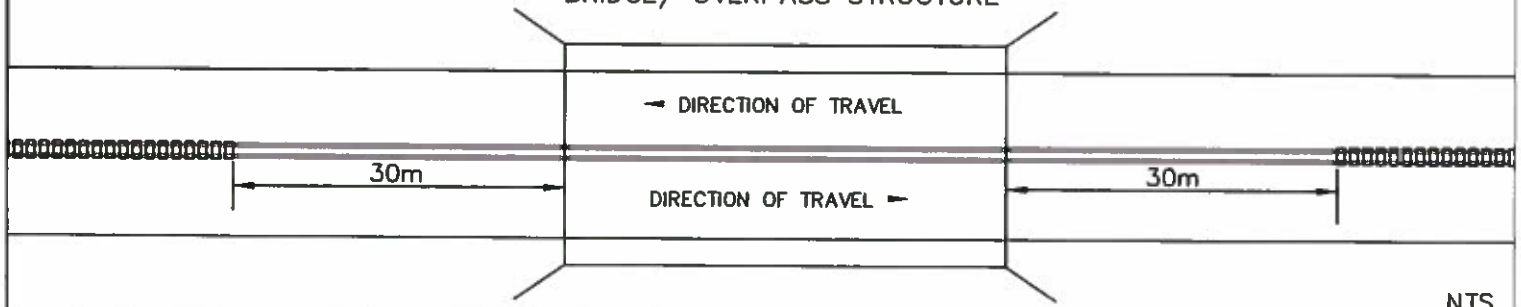

NTS

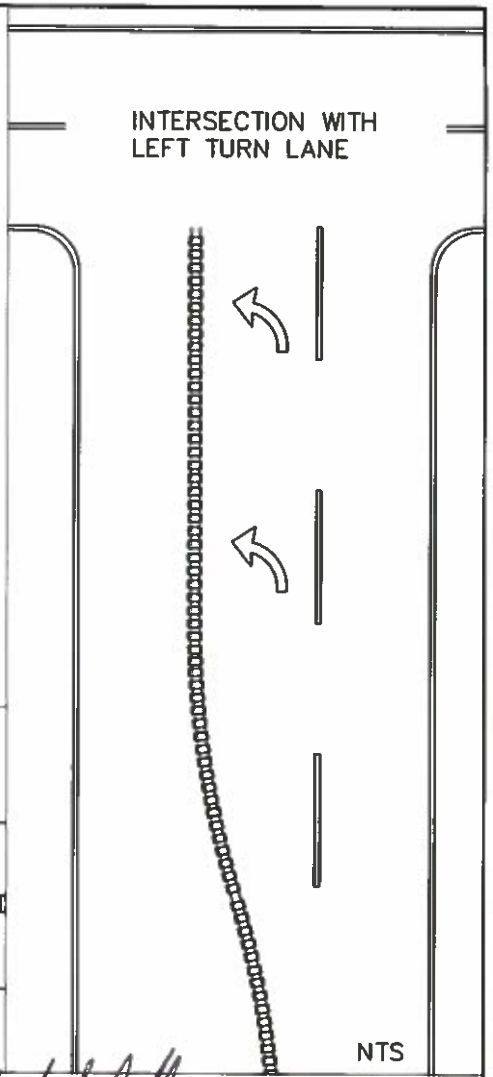

NTS

NOTES:
1. CENTRE LINE RUMBLE STRIPS INSTALLED ON 100 SERIES HIGHWAYS WHERE SPEED LIMIT > 70KM/H.
2. CENTRE LINE RUMBLE STRIPS NOT TO BE INSTALLED ON OR WITHIN 30m OF BRIDGE DECK.
3. CENTRE LINE RUMBLE STRIPS TO BE DISCONTINUED THRU INTERSECTIONS BUT WILL CONTINUE PAST DRIVEWAYS AND WOODS ROAD ENTRANCES.
4. CENTRE LINE RUMBLE STRIPS SHALL BE INSTALLED IN BOTH "PASSING" AND "NO PASSING" ZONES.
5. PAINTED CENTRE LINE MARKINGS TO BE APPLIED (OR REAPPLIED) AFTER CENTRE LINE RUMBLE STRIPS INSTALLED.

Manager Traffic Engineering and Road Safety — Nov 28/14

Director Highway Engineering Services — Nov 28/14

Executive Director Highway Engineering and Construction — Dec 2/14

NOVA SCOTIA
Transportation and Infrastructure Renewal

No.	REVISION
3	CHANGED WORDING IN NOTES–NOV 2014
2	TITLE CHANGED – OCT 2013
1	NAME CHANGE IN NOTE #1–09 MAY 13

Scale : N.T.S.
Drawn by : C.DOYLE
Checked by : P.SMITH
Date of Plan : DEC–2012
File No. : S–2009–044

APPENDIX "A"
CONTINUOUS CENTRE LINE RUMBLE STRIPS

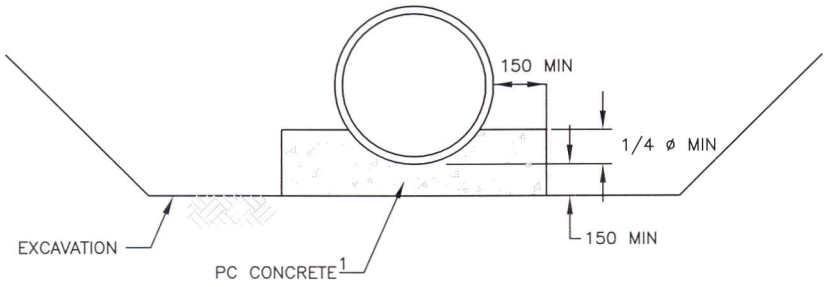

CLASS A BEDDING

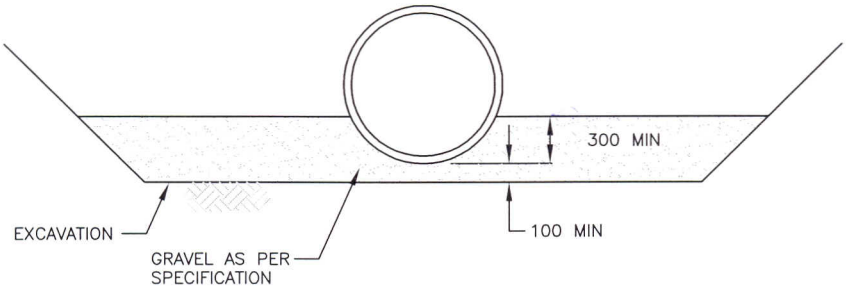

CLASS B BEDDING

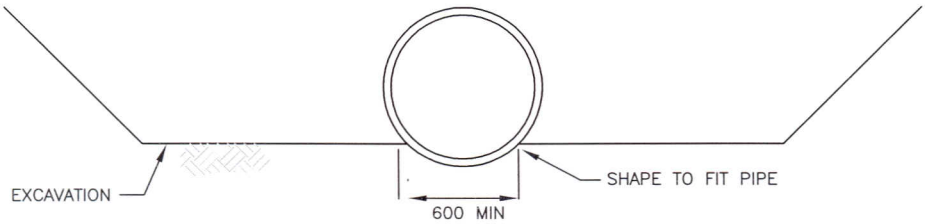

CLASS C BEDDING

NOTES:
1. CRUSHED STONE OR GRAVEL INSTEAD OF CONCRETE PERMITTED ON ROCK FOUNDATION WITH METHOD OF LAYING AS PER CLASS B BEDDING.
2. ALL DIMENSIONS ARE IN MILLIMETRES UNLESS OTHERWISE NOTED.

Scale :	N.T.S.
Drawn by :	M.LABRECHE
Checked by :	W.DEVEAU
Date of Plan :	AUG2009
File No. :	S-2009-051

Manager Highway Planning and Design

Director Highway Engineering Services

Executive Director Highway Engineering and Construction

NOVA SCOTIA
Transportation and Infrastructure Renewal

No.	REVISION

BEDDING FOR CONCRETE PIPE
HS506

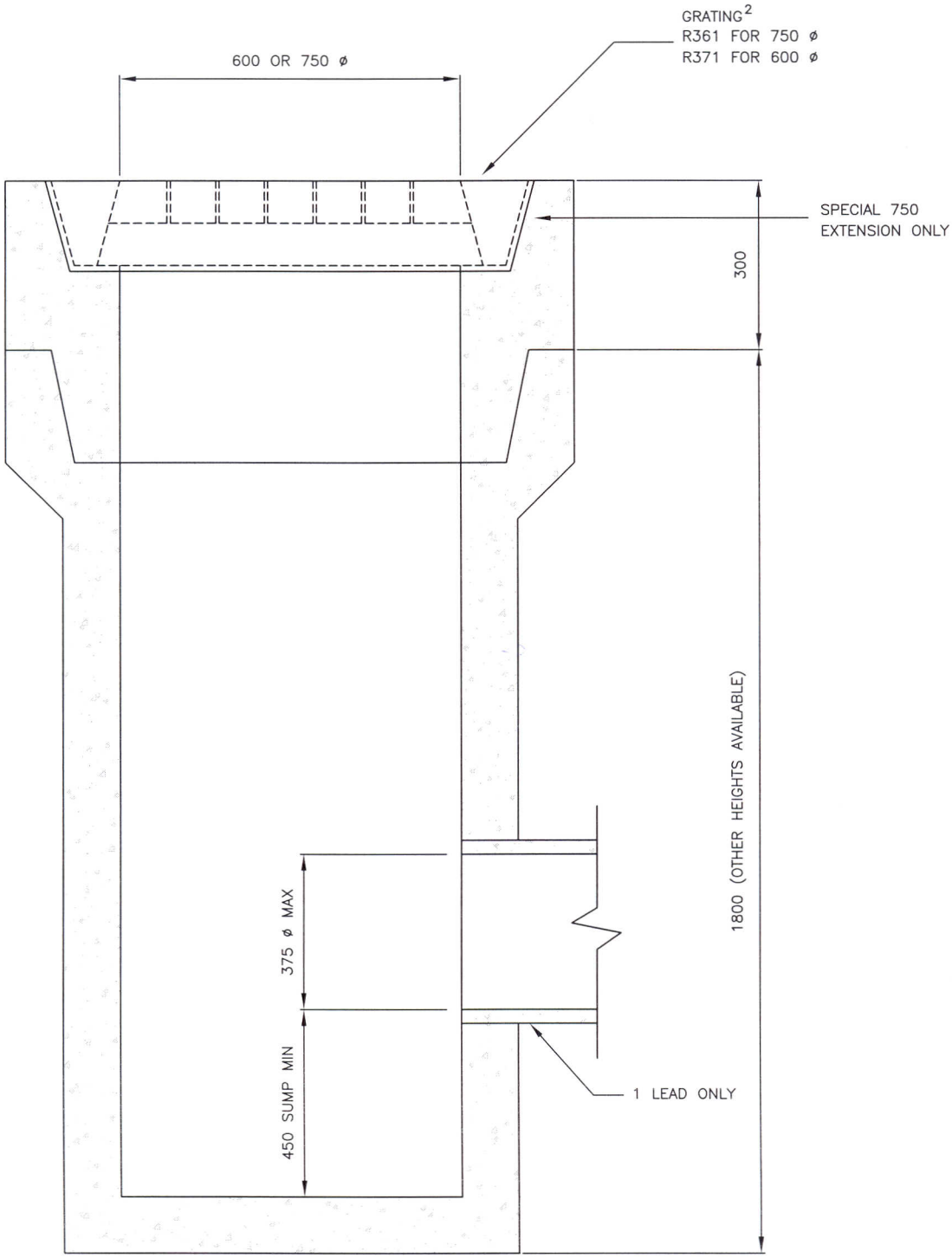

SECTION VIEW

NOTES:
1. RECOMMENDED USE ONLY BEHIND CURBS (ie. GRASS BOULEVARD OR SHOULDER).
2. REFER TO STANDARD DWG S–2009–057 FOR DETAILS.
3. ALL DIMENSIONS ARE IN MILLIMETRES UNLESS OTHERWISE NOTED.

Scale :	N.T.S.
Drawn by :	M.LABRECHE
Checked by :	W.DEVEAU
Date of Plan :	AUG2009
File No. :	S–2009–052

Manager Highway Planning and Design

Director, Highway Engineering Services

Executive Director Highway Engineering and Construction

NOVA SCOTIA
Transportation and Infrastructure Renewal

No.	REVISION

TYPICAL 600 - 750mm Ø CATCH BASIN AND GRATING

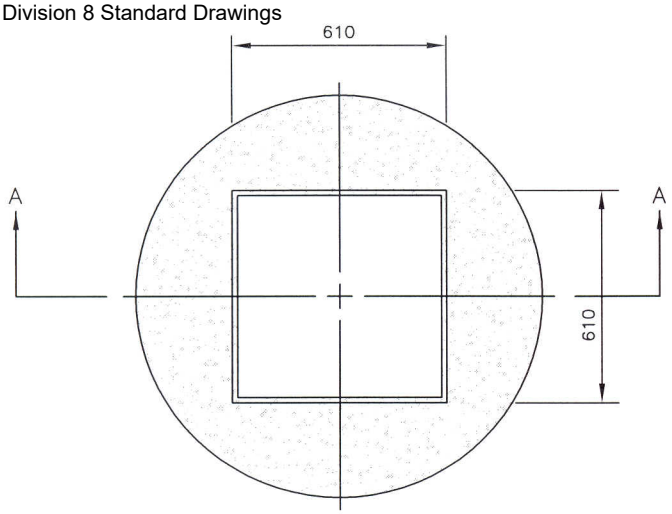

PLAN

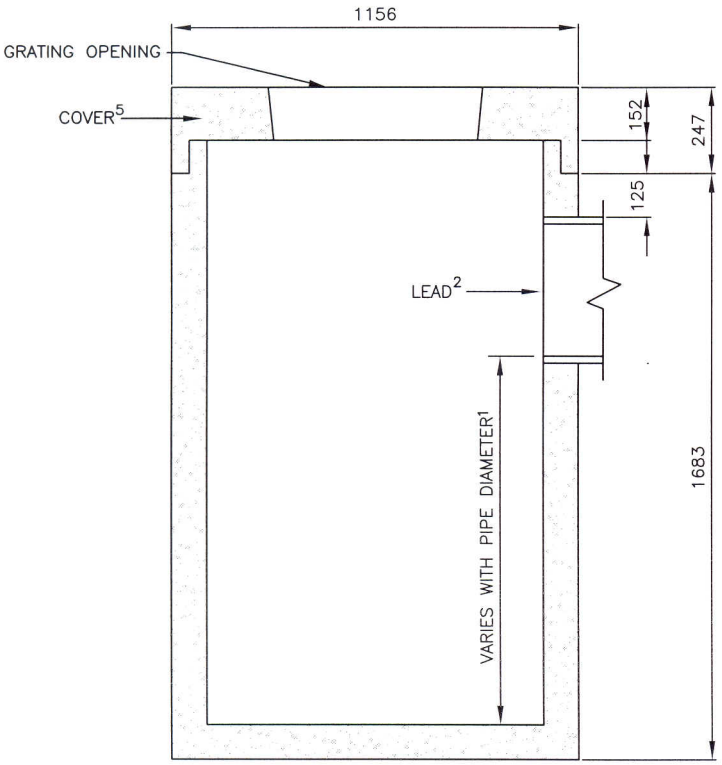

SECTION A–A

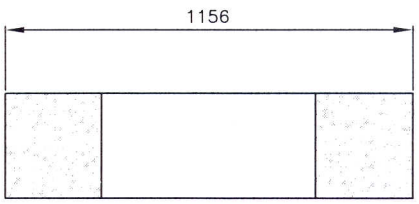

GRADE RING DETAIL[4]

NOTES:
1. MINIMUM SUMP 450mm.
2. MAXIMUM 2 LEADS PER CATCH BASIN; MAXIMUM LEAD SIZE 450mm ø.
3. NO INTERMEDIATE RINGS AVAILABLE.
4. AVAILABLE IN 150mm, 300mm & 400mm DEPTHS.
5. REQUIRED COVER S401 OR S361 OR EQUIVALENT.
6. ALL DIMENSIONS ARE IN MILLIMETRES UNLESS OTHERWISE NOTED.

Scale :	N.T.S.
Drawn by :	M.LABRECHE
Checked by :	W.DEVEAU
Date of Plan :	AUG2009
File No. :	S–2009–054

Manager Highway Planning and Design

Director Highway Engineering Services

Executive Director Highway Engineering and Construction

NOVA SCOTIA
Transportation and Infrastructure Renewal

No.	REVISION

TYPICAL 900mmØ CATCH BASIN

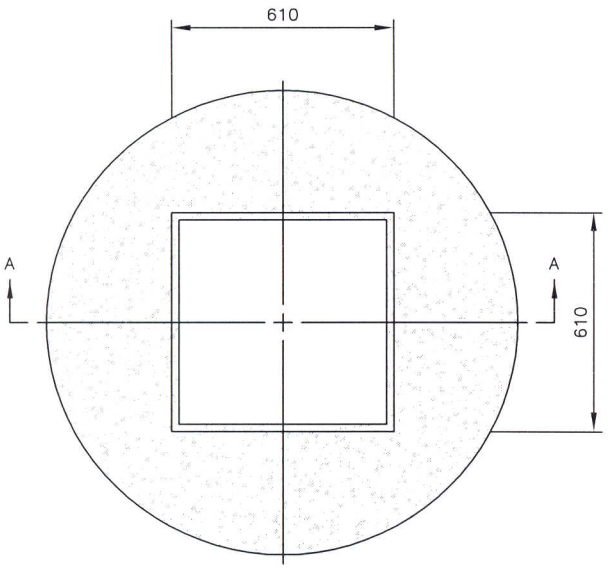

PLAN

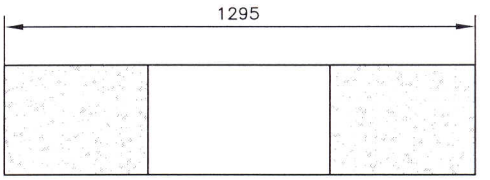

GRADE RING DETAIL[4]

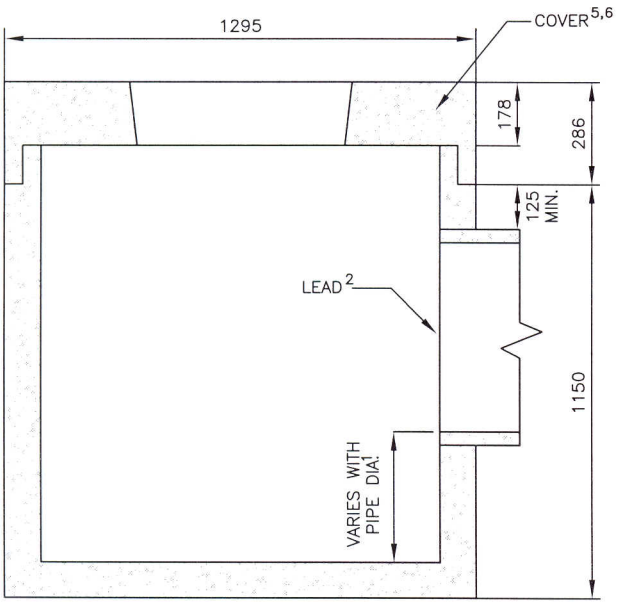

SECTION A–A

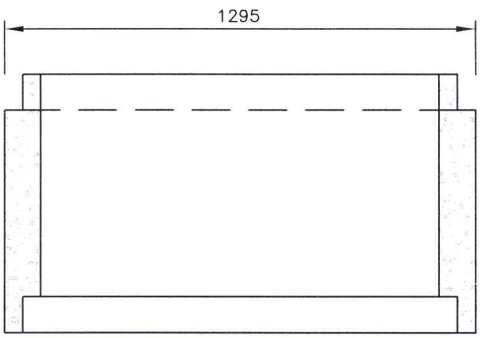

INTERMEDIATE RING DETAIL[3]

NOTES:
1. MINIMUM SUMP 450mm.
2. MAXIMUM 3 LEADS (2–600mm , 1–300mm)
3. INTERMEDIATE RINGS AVAILABLE IN 500mm, 750mm, 1000mm, 1250mm DEPTHS.
4. GRADE RINGS AVAILABLE IN 150mm, 300mm & 400mm DEPTHS.
5. REQUIRED COVER S401 OR S361 OR EQUIVALENT.
6. OPTIONAL COVERS AVAILABLE CPC 175D (DUPLEX COVER) OR CPC 450 (50 000kg LOADING).
7. ALL DIMENSIONS ARE IN MILLIMETRES UNLESS OTHERWISE NOTED.

Scale :	N.T.S.
Drawn by :	M.LABRECHE
Checked by :	W.DEVEAU
Date of Plan :	AUG2009
File No. :	S–2009–055

Manager Highway Planning and Design

Director Highway Engineering Services

Executive Director Highway Engineering and Construction

NOVA SCOTIA
Transportation and Infrastructure Renewal

No.	REVISION

TYPCIAL 1050mm Ø CATCH BASIN

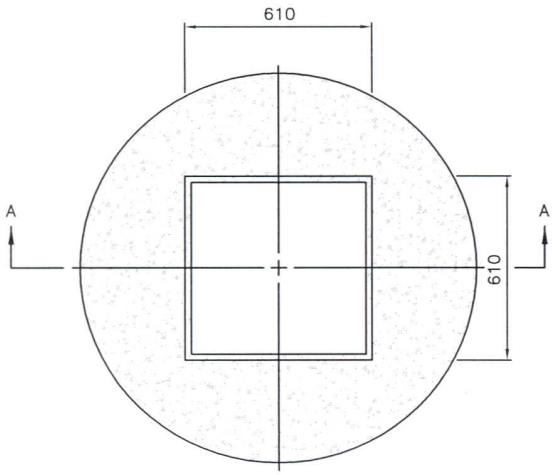

PLAN

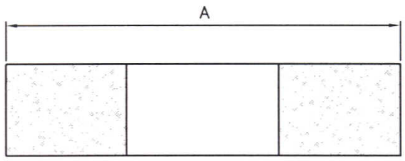

GRADE RING DETAIL[4]

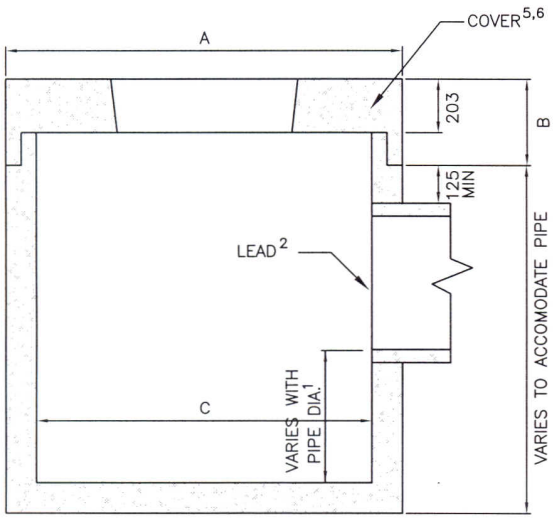

SECTION A–A

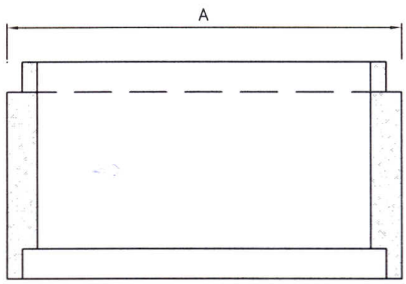

INTERMEDIATE RING DETAIL[3]

CATCH BASIN – TABLE OF SIZES – METRIC (mm)

BASE SECTION					TOP SECTION		
SIZE	UNIT DESIGNATION	A	B	C	UNIT DESIGNATION	A	B
1200 mm	EPB_____	1473	1219	750 ø	EPC 200	1473	286
1500 mm	KPB_____	1828	1524	900 ø	KPC 200	1828	324
1800 mm	LPB_____	2222	1828	1200 ø	LPC 200	2222	336
2100 mm	RPB_____	2578	2134	1500 ø	RPC 200	2578	330
2400 mm	QPB_____	2934	2438	1800 ø	QPC 200	2934	336

NOTES:
1. MINIMUM SUMP 450mm.
2. MAXIMUM 3 LEADS (2–600mmø, 1–300mmø).
3. INTERMEDIATE RINGS AVAILABLE IN 500mm, 750mm, 1000mm, 1250mm DEPTHS.
4. GRADE RINGS AVAILABLE IN 150mm, 300mm AND 400mm DEPTHS.
5. REQUIRED COVER S401 OR S361 OR EQUIVALENT.
6. OPTIONAL COVERS AVAILABLE CPC 175D (DUPLEX COVER) OR CPC 450 (50 000kg LOADING).
7. ALL DIMENSIONS ARE IN MILLIMETRES UNLESS OTHERWISE NOTED.

Scale : N.T.S.
Drawn by : M.LABRECHE
Checked by : W.DEVEAU
Date of Plan : AUG2009
File No. : S–2009–056

NOVA SCOTIA
Transportation and Infrastructure Renewal

No.	REVISION

Manager Highway Planning and Design

Director Highway Engineering Services

Executive Director Highway Engineering and Construction

TYPICAL 1200 - 2400mm Ø CATCH BASIN

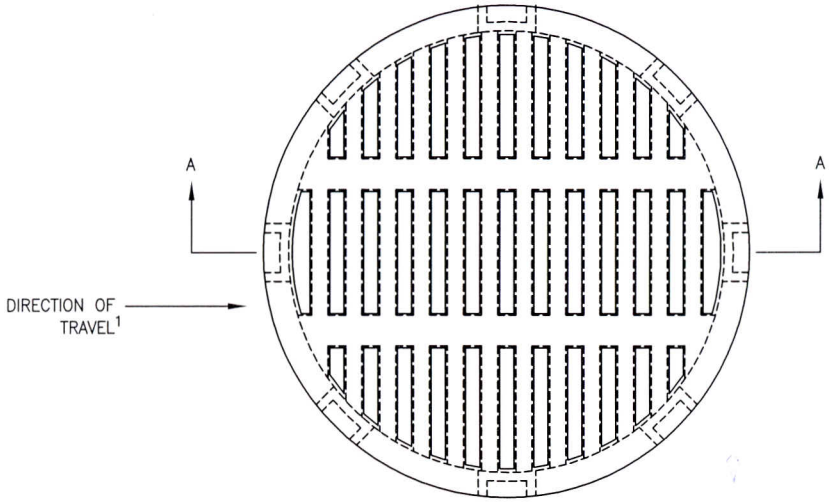

R 361 GRATING

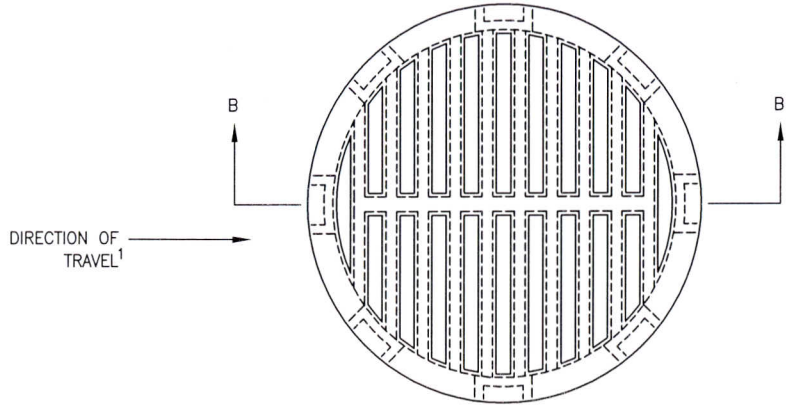

R 371 GRATING

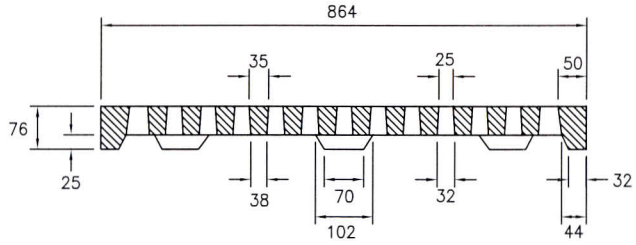

SECTION A–A

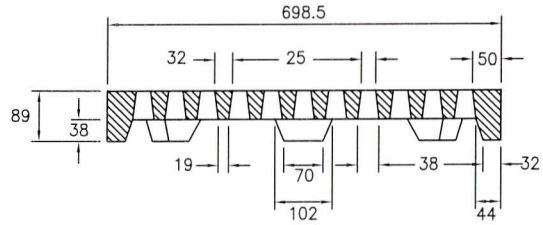

SECTION B–B

NOTES:
1. GRATING PLACED SO THAT SLOTS IN THE GRATING ARE AT RIGHT ANGLES TO THE DIRECTION OF TRAVEL.
2. ALL DIMENSIONS ARE IN MILLIMETRES UNLESS OTHERWISE NOTED.

Manager Highway Planning and Design

Director Highway Engineering Services

Executive Director Highway Engineering and Construction

NOVA SCOTIA
Transportation and Infrastructure Renewal

No.	REVISION

Scale : N.T.S.
Drawn by : M.LABRECHE
Checked by : W.DEVEAU
Date of Plan : AUG2009
File No. : S–2009–057

R361 AND R371 GRATING

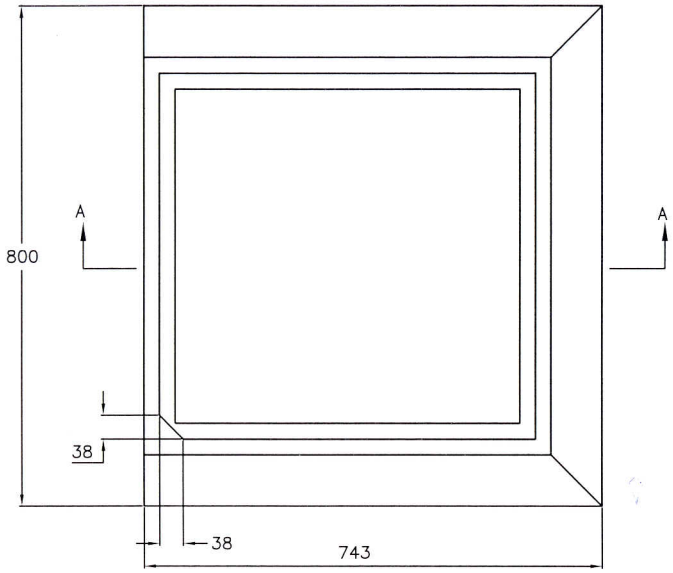

FRAME

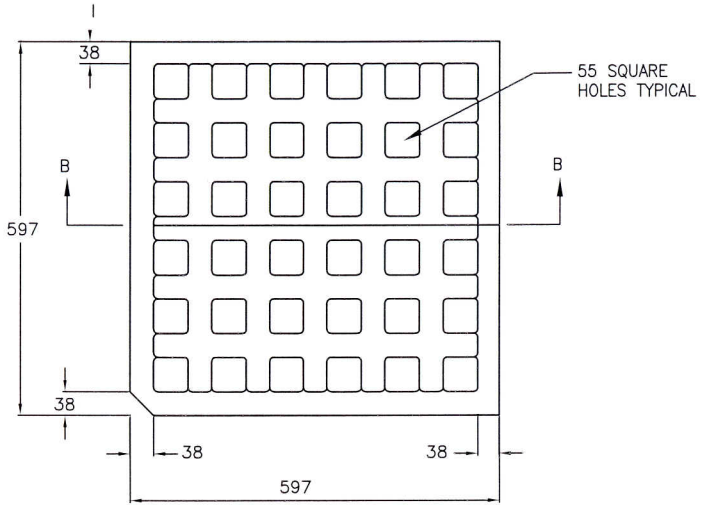

GRATING [2]

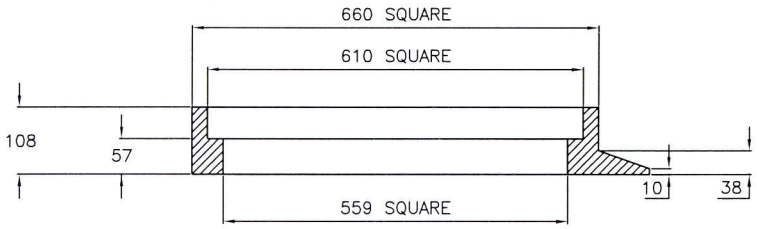

SECTION A–A

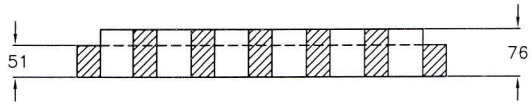

SECTION B–B

NOTES:
1. USE S400/S410 FRAME AND COVER FOR MANHOLES.
2. SAME SIZE AS S400/S410 COVER.
3. ALL DIMENSIONS ARE IN MILLIMETRES UNLESS OTHERWISE NOTED.

Manager Highway Planning and Design

Director Highway Engineering Services

Executive Director Highway Engineering and Construction

NOVA SCOTIA
Transportation and Infrastructure Renewal

No.	REVISION

Scale : N.T.S.
Drawn by : M.LABRECHE
Checked by : W.DEVEAU
Date of Plan : AUG2009
File No. : S–2009–058

S401 FRAME AND GRATING

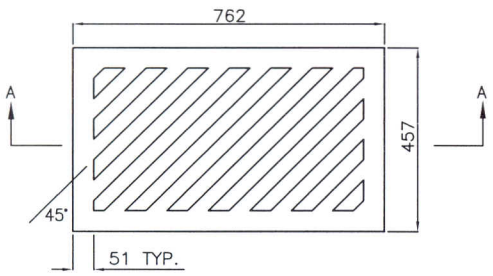

GRATING

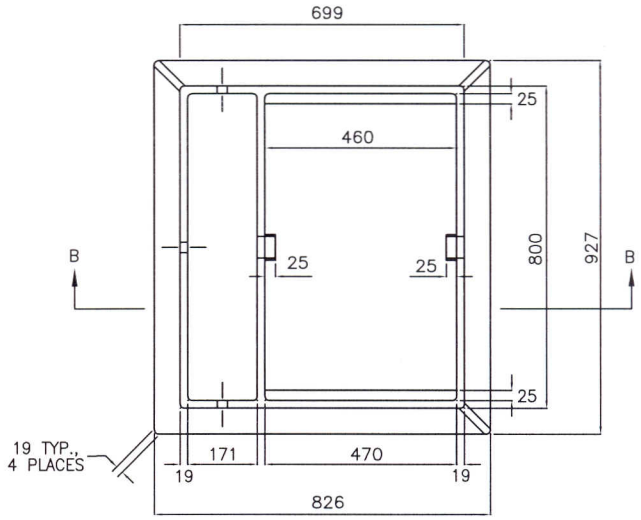

FRAME

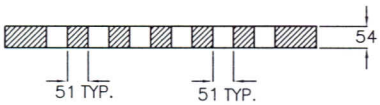

SECTION A–A

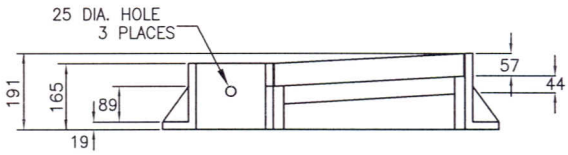

SECTION B–B

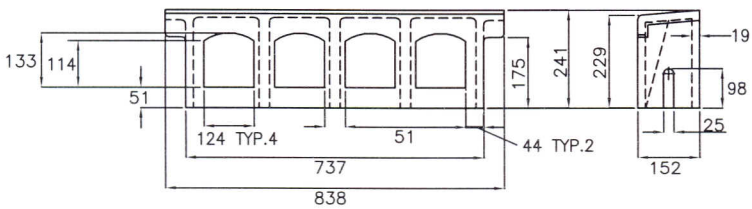

CURB

NOTES:
1. USE S400/S410 FRAME AND COVER FOR MANHOLES.
2. ALL DIMENSIONS ARE IN MILLIMETRES UNLESS OTHERWISE NOTED.

Scale :	N.T.S.
Drawn by :	M.LABRECHE
Checked by :	W.DEVEAU
Date of Plan :	AUG2009
File No. :	S–2009–059

Manager Highway Planning and Design

Director Highway Engineering Services

Executive Director Highway Engineering and Construction

NOVA SCOTIA
Transportation and Infrastructure Renewal

No.	REVISION

S361 CATCH BASIN FRAME, GRATING & CURB

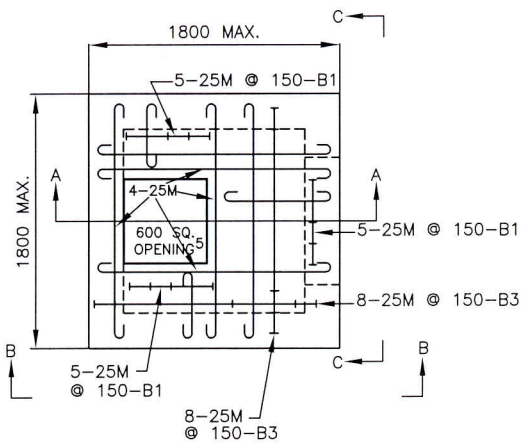

ROOF PLAN

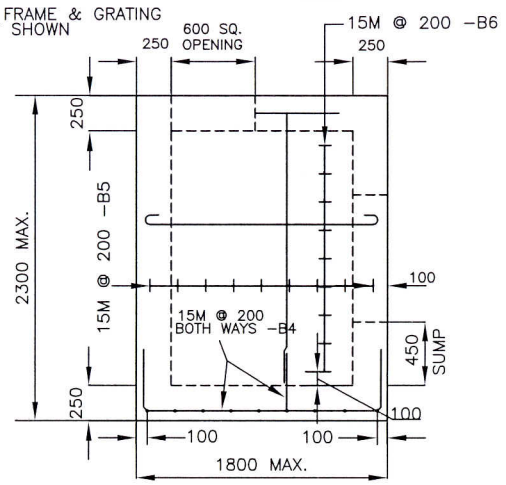

ELEVATION B–B

SIDE WALL WITHOUT HOLE

TYPICAL BAR LIST FOR THE MAXIMUM SIZE AS SHOWN

MARK	QTY.	SIZE	TYPE	A	B	G	J
B1	10	25M	1	250	530	250	180
B2	5	25M	1	250	880	250	180
B3	16	25M	1	250	1730	250	180
B4	18	15M	2	655	1700	655	–
B5	31	15M	1	180	2000	–	130
B6	31	15M	1	180	1700	180	130
B7	6	15M	1	180	630	180	130
B8	6	15M	1	180	380	180	130
B9	4	20M	1	210	1700	180	140
B10	10	15M	1	180	380	180	130

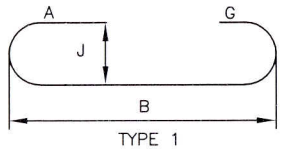

TYPE 1

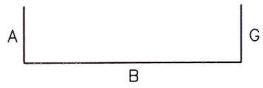

TYPE 2

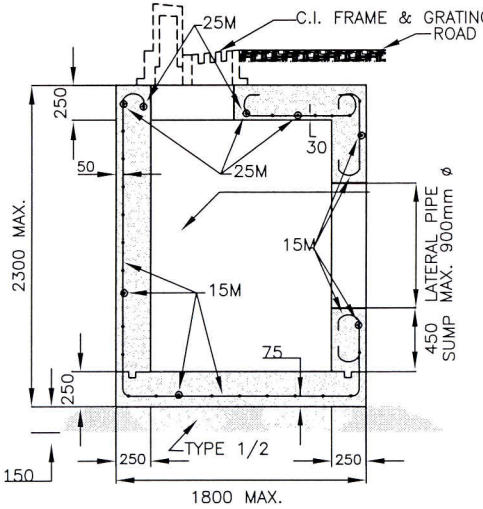

SECTION A–A

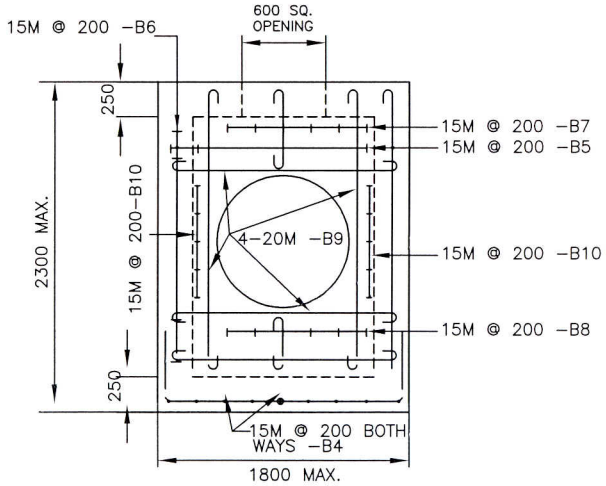

ELEVATION C–C

SIDE WALL WITH HOLE – UP TO 900mm ø

APPROXIMATE QUANTITIES

FOR 1800x2300 CATCH BASIN WITH 600mm SQUARE OPENING ON TOP SLAB AND ONE 900mm DIAMETER OPENING ON SIDEWALL.

REINFORCING STEEL = 510kg

CONCRETE = 4.2 CUBIC METRES

NOTES:
1. DESIGN LOAD = CS600.
2. ALL CONCRETE USED SHALL BE AS SPECIFIED IN DIVISION 5 OF DEPARTMENT STANDARD SPECIFICATIONS. MINIMUM COMPRESSIVE STRENGTH AT 28 DAYS TO BE 30MPa.
3. ALL REINFORCING STEEL TO BE HIGH STRENGTH BARS CONFORMING TO CSA STANDARD G30.12M 1973 AND HAVING YIELD STRENGTH OF 400MPa. MINIMUM COVERING FOR THE REINFORCING STEEL IS 50mm (EXCEPT AS NOTED IN DRAWING).
4. FOR CAST IN PLACE CATCH BASIN WITH NO LIVE LOAD, THE ONLY CHANGE REQUIRED FOR THE DESIGN IS TO REPLACE THE 25M BARS WITH 15M BARS AT THE ROOF.
5. LOCATION OF OPENING ON ROOF OF CATCH BASIN WILL BE DETERMINED IN THE FIELD, AS DIRECTED BY THE ENGINEER.
6. ALL DIMENSIONS ARE IN MILLIMETRES UNLESS OTHERWISE NOTED.

Manager Highway Planning and Design

Director Highway Engineering Services

Executive Director Highway Engineering and Construction

NOVA SCOTIA
Transportation and Infrastructure Renewal

No.	REVISION

Scale : N.T.S.
Drawn by : M.LABRECHE
Checked by : W.DEVEAU
Date of Plan : AUG2009
File No. : S–2009–060

CAST IN PLACE CATCH BASIN

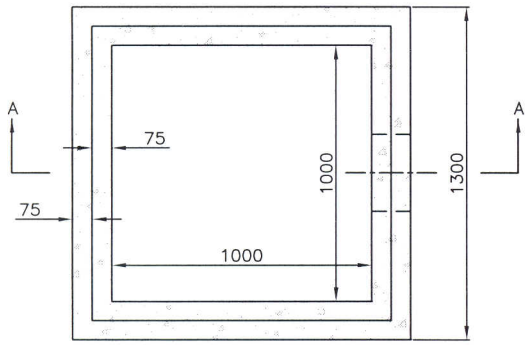

PLAN

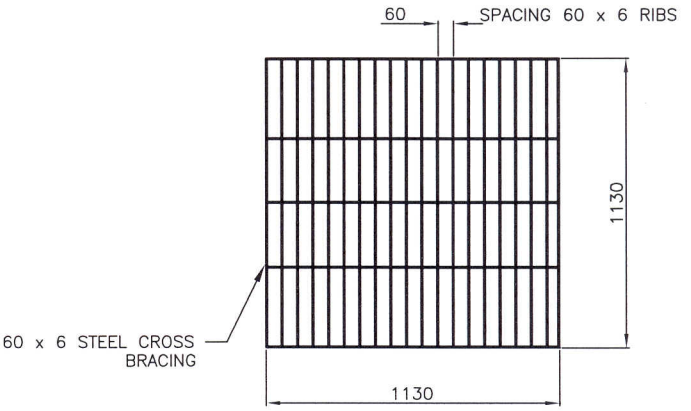

GRATING

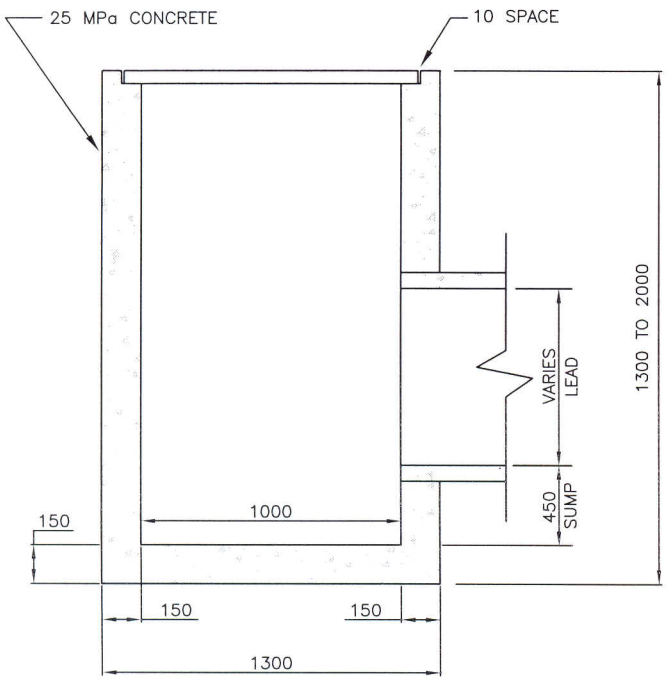

SECTION A–A

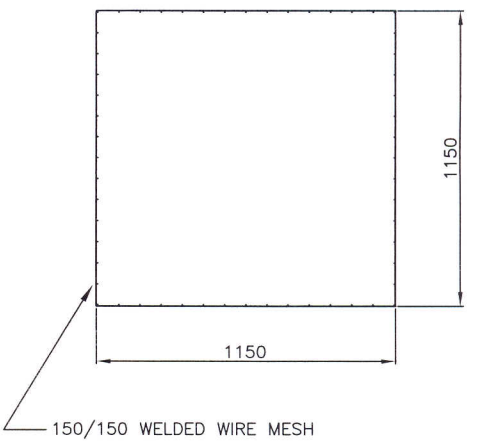

NOTES:
1. ALL DIMENSIONS ARE IN MILLIMETRES UNLESS OTHERWISE NOTED.

Scale :	N.T.S.
Drawn by :	M.LABRECHE
Checked by :	W.DEVEAU
Date of Plan :	AUG2009
File No. :	S–2009–061

Manager Highway Planning and Design

Director Highway Engineering Services

Executive Director Highway Engineering and Construction

NOVA SCOTIA
Transportation and Infrastructure Renewal

No.	REVISION

CAST IN PLACE MEDIAN CATCH BASIN & GRATING

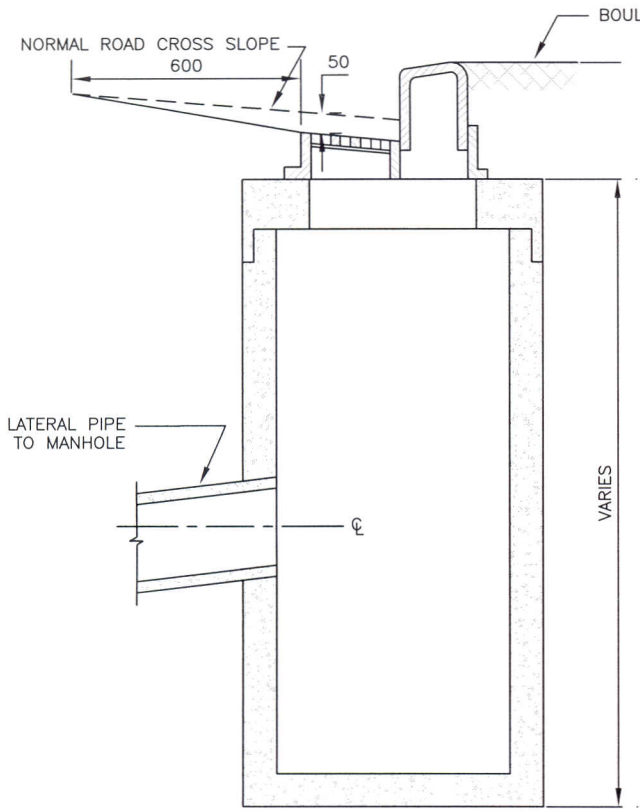

SECTION A–A
N.T.S.

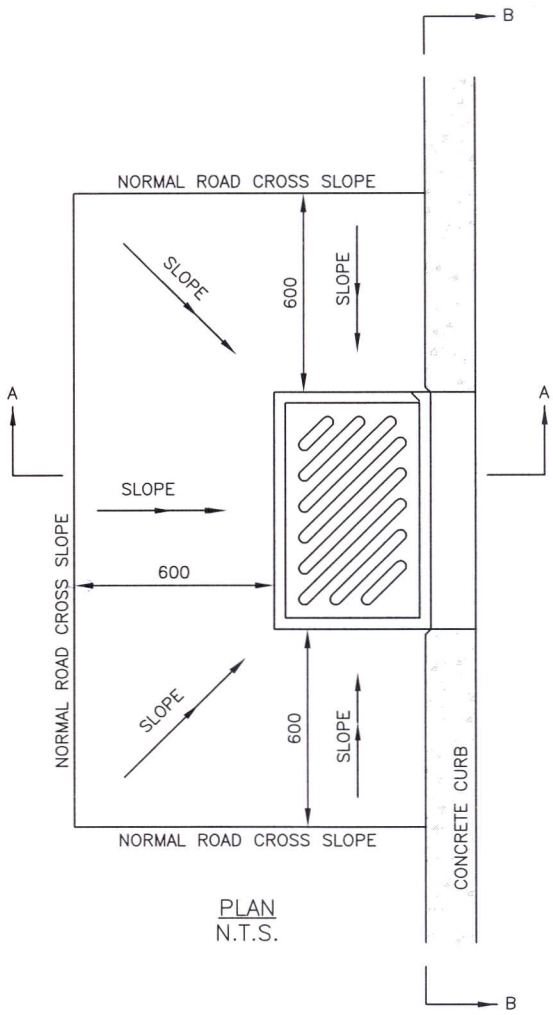

PLAN
N.T.S.

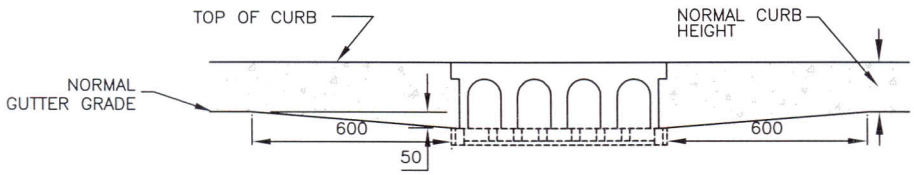

SECTION B–B
N.T.S.

NOTES:
1. ALL DIMENSIONS ARE IN MILLIMETRES UNLESS OTHERWISE NOTED.

Scale :	N.T.S.
Drawn by :	M.LABRECHE
Checked by :	W.DEVEAU
Date of Plan :	AUG2009
File No. :	S–2009–062

Manager Highway Planning and Design

Director Highway Engineering Services

Executive Director Highway Engineering and Construction

NOVA SCOTIA
Transportation and Infrastructure Renewal

No.	REVISION

DEPRESSED GUTTER AT CATCH BASINS
HS508

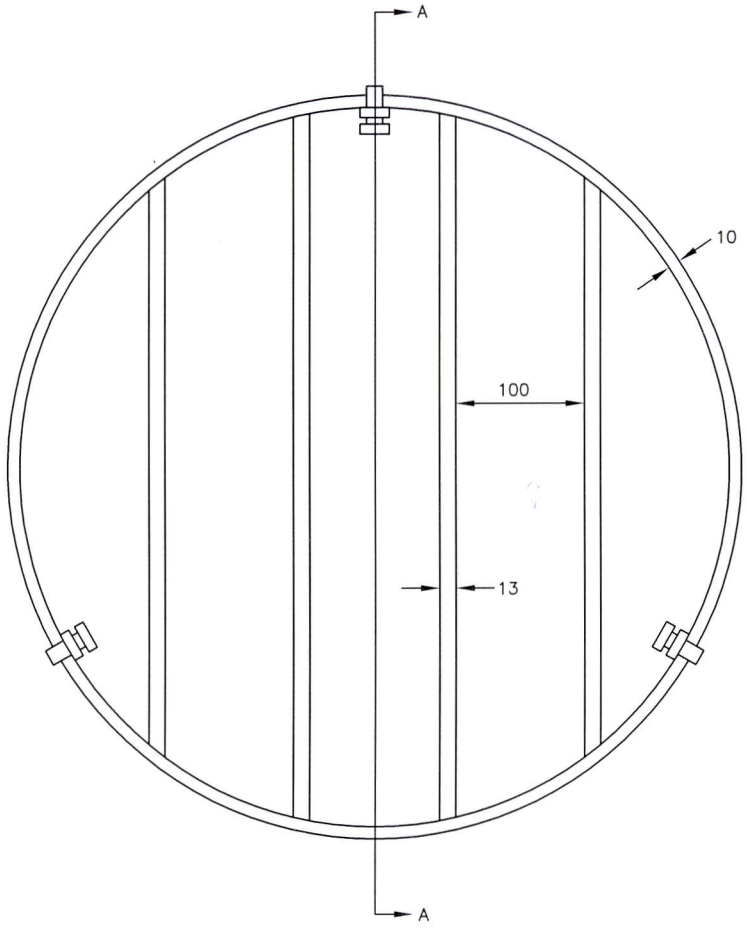

PLAN

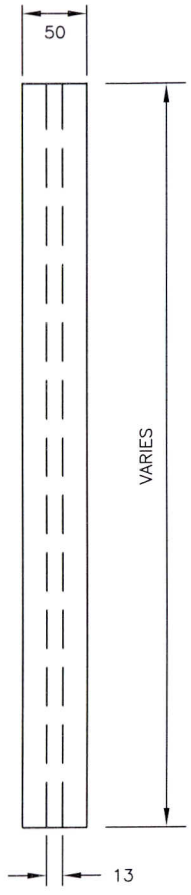

SECTION A–A

N.T.S.

NOTES:
1. ASSEMBLY TO BE GALVANIZED TO CSA G164 LATEST EDITION AFTER FABRICATION.
2. BARS TO BE VERTICAL ON PIPE INLET AND HORIZONTAL ON PIPE OUTLET.
3. ALL DIMENSIONS ARE IN MILLIMETRES UNLESS OTHERWISE NOTED.

Manager Highway Planning and Design

Director Highway Engineering Services

Executive Director Highway Engineering and Construction

NOVA SCOTIA
Transportation and Infrastructure Renewal

No.	REVISION

Scale : N.T.S.
Drawn by : M.LABRECHE
Checked by : W.DEVEAU
Date of Plan : AUG2009
File No. : S–2009–063

PIPE GRATES
HS517

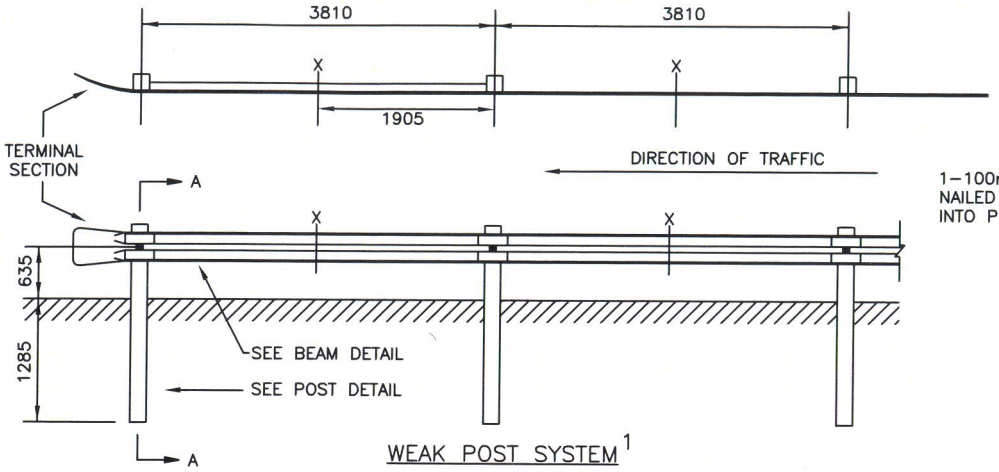

WEAK POST SYSTEM [1]

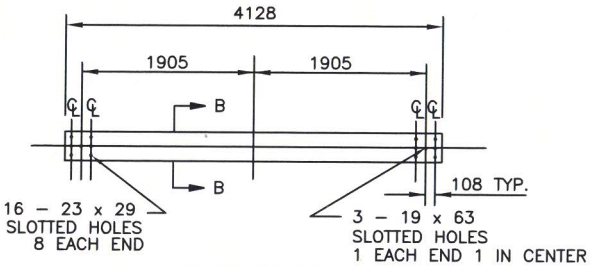

BEAM DETAIL

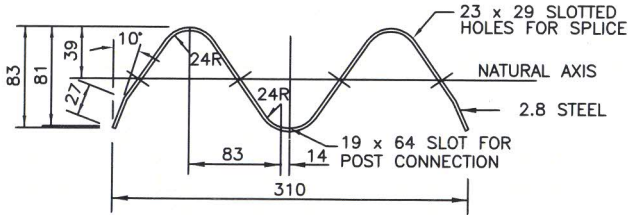

SECTION B–B

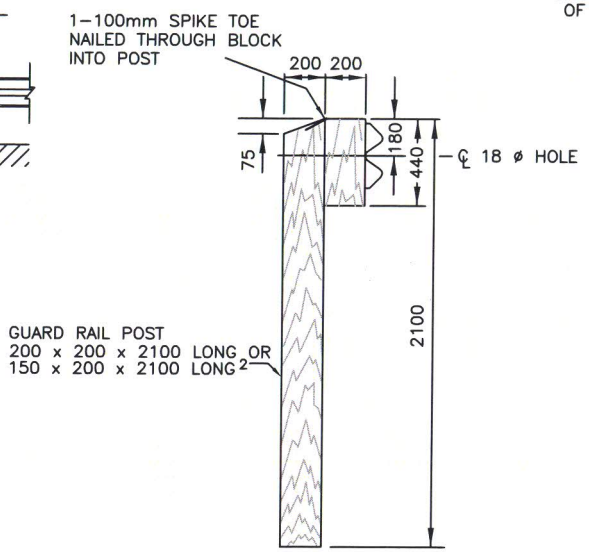

POST AND BLOCK DETAIL

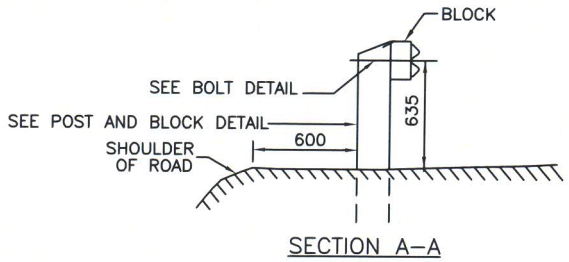

SECTION A–A

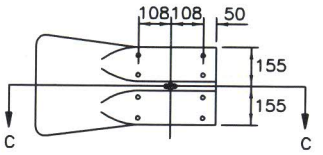

BEAM TERMINAL DETAIL [3]

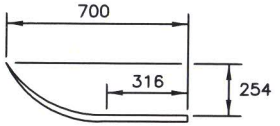

SECTION C–C

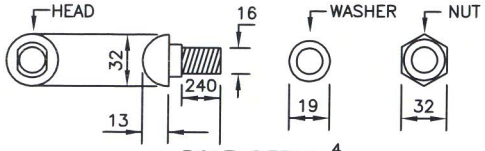

BOLT DETAIL [4]

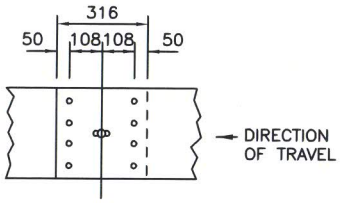

BEAM SPLICE DETAIL

NOTES:
1. FOR STRONG POST SYSTEM, ADD POST AT POINT X.
2. IF 150 x 200 x 2100 LONG POSTS ARE USED, THE MATERIAL IS TO BE HARDWOOD.
3. TERMINAL SECTION ONLY APPROPRIATE FOR 4–LANE DIVIDED HIGHWAYS.
4. ALL BOLTS, NUTS AND WASHERS SHALL BE GALVANIZED BY THE HOT DIP PROCESS. BOLTS SHALL BE CAPABLE OF WITHSTANDING 106 kN IN SINGLE SHEAR. 16mm SQUARENUT AND 19mm ROUND WASHERS ARE TO BE USED. ONE WASHER FOR EACH 240mm x 16mm BOLT. BOLTS ARE TO HAVE 75mm THREADS. FOR STRONG POST SYSTEM BOLT LENGTH SHALL BE 440mm.
5. ALL DIMENSIONS ARE IN MILLIMETRES UNLESS OTHERWISE NOTED.

Manager Highway Planning and Design

Director Highway Engineering Services

Executive Director Highway Engineering and Construction

NOVA SCOTIA
Transportation and Infrastructure Renewal

No.	REVISION
3	UPDATED TO AAHSTO STANDARD. JAN15
2	BEAM SPLICE DETAIL MODIFIED /SEP10
1	DETAILS, NOTES, TITLES /FEB 10

Scale :	N.T.S.
Drawn by :	M.LABRECHE
Checked by :	J.RAE
Date of Plan :	AUG2009
File No. :	S–2009–071

GUARD RAIL AND POST DETAILS
HS518

POST OFFSET TABLE	
FILL OR CUT	
X	Y[3]
3.81	0.04
7.62	0.15
11.42	0.34
15.22	0.60
19.02	0.94
22.81	1.35

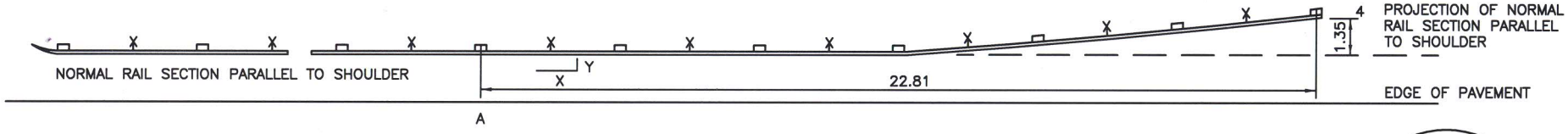

PLAN – FILL OR CUT
DIVIDED HIGHWAY[5]

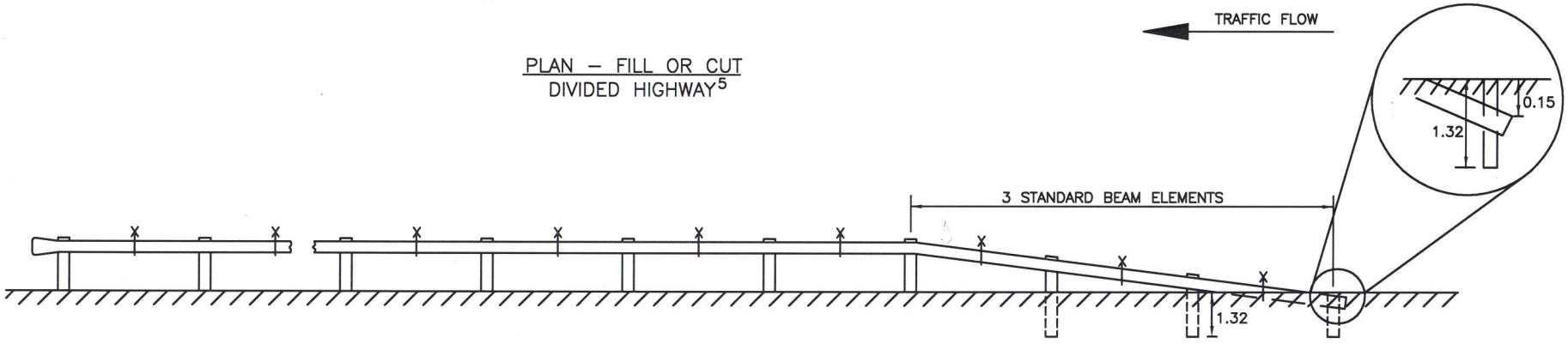

ELEVATION
DIVIDED HIGHWAY[5]

1. FOR STRONG POST SYSTEM, ADD POST AT POINT "X"
2. THIS STANDARD DRAWING IS NOT APPLICABLE TO NEW 100 SERIES HIGHWAY CONSTRUCTION WHERE ENERGY ABSORBING GUARD RAIL TERMINALS (EAGRT) SYSTEMS ARE SPECIFIED.
3. MEASURED FROM FACE OF RAIL BASED ON NORMAL RAIL SECTION PARALLEL TO SHOULDER AT A.
4. GUARD RAIL MAY BE PLACED AS PRACTICABLE FROM EDGE OF SHOULDER. IN NO CASE MAY GUARD RAIL BE PLACED DOWN THE SLOPE.
5. FOR 2–LANE/ 2–WAY ROADWAYS, BURY BOTH ENDS OF GUARD RAIL.
6. ALL DIMENSIONS ARE IN METRES UNLESS OTHERWISE NOTED.

NOVA SCOTIA
Transportation and Infrastructure Renewal

No.	REVISION
4	Addition of EAGRT note – Feb 12
3	Addition of post bury depth – FEB 11
2	Addition of "X" for strong post system
1	Notes, Titles – Feb 10

Scale :	N.T.S.
Drawn by :	M.LABRECHE
Checked by :	J.RAE
Date of Plan :	AUG2009
File No. :	S–2009–072

Manager Highway Planning and Design

Director Highway Engineering Services

Executive Director Highway Engineering and Construction

STEEL BEAM GUARD RAIL END TREATMENT HS520

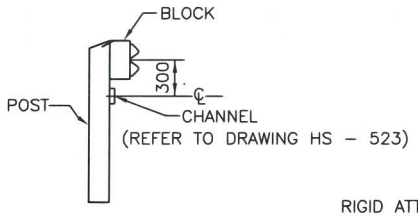

SECTION A–A

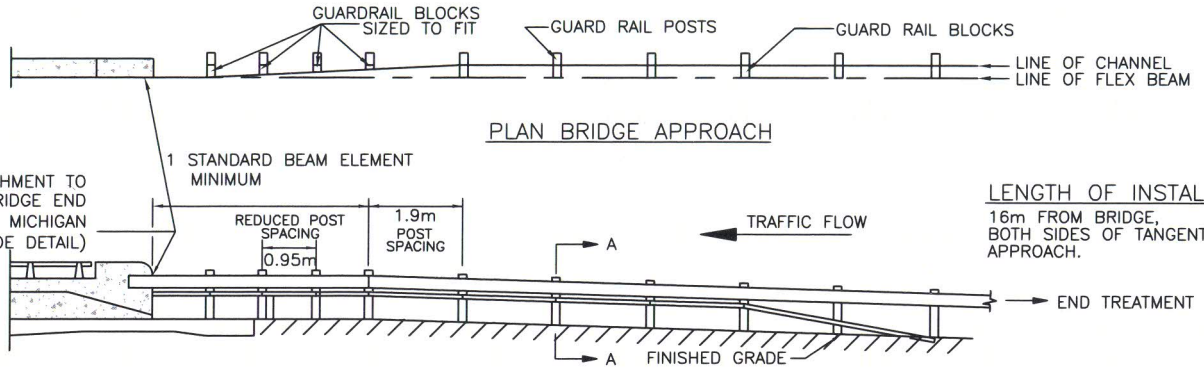

PLAN BRIDGE APPROACH

LENGTH OF INSTALLATION
16m FROM BRIDGE, BOTH SIDES OF TANGENT APPROACH.

ELEVATION – ROADSIDE BARRIER AT CONCRETE BRIDGE
- TWO WAY TRAFFIC AT ALL FOUR CORNERS OF BRIDGE
- DIVIDED HIGHWAY AT APPROACH TO BRIDGE ONLY

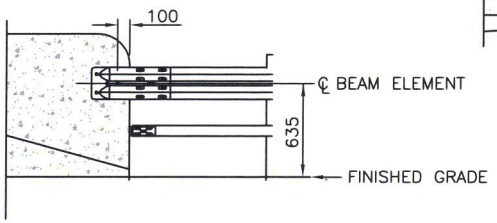

ELEVATION END BLOCK CONNECTION

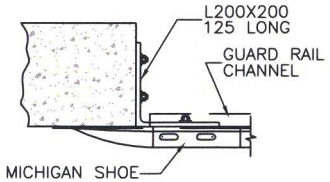

PLAN END BLOCK CONNECTION

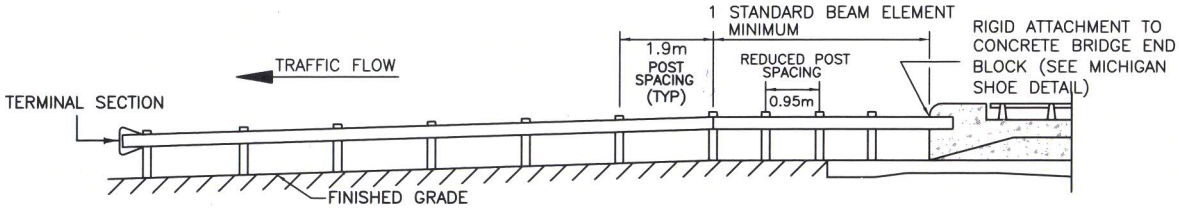

ELEVATION – ROADSIDE BARRIER AT CONCRETE BRIDGE (NO CHANNEL)
- DIVIDED HIGHWAY AT DEPARTURE OF BRIDGE ONLY

NOTES:
1. SEE BEAM DETAIL, BEAM TERMINAL DETAIL, BEAM SPLICE DETAIL, POST AND BLOCK DETAIL, BOLT DETAIL, NOTE 2, NOTE 3, NOTE4 ON STANDARD DRAWING S–2009–071.
2. SEE STANDARD DRAWING S–2009–072 FOR END TREATMENT.
3. ALL DIMENSIONS ARE IN MILLIMETRES UNLESS OTHERWISE NOTED.

NOVA SCOTIA
Transportation and Infrastructure Renewal

No.	REVISION
5	GUARDRAIL RAISED 35mm ON BLOCK DETAIL--FEB 2015
4	Moved note 4 and 5 under headings – Jan 12
3	Length of installation note – Aug 11
2	Addition of Note 4 and 5 – Feb 11
1	SEC A–A, Notes – Feb 10

Scale : N.T.S.
Drawn by : M.LABRECHE
Checked by : J.RAE
Date of Plan : AUG2009
File No. : S–2009–073

Manager Highway Planning and Design

Director Highway Engineering Services

Executive Director Highway Engineering and Construction

ROADSIDE BARRIER AT CONCRETE BRIDGE APPROACH HS521

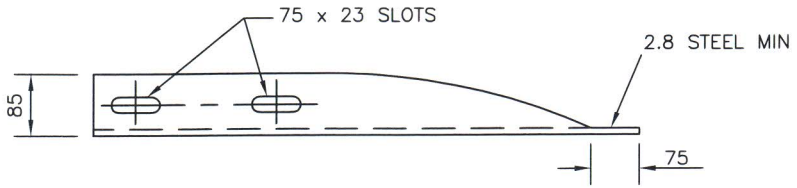

PLAN DETAIL OF SHOE

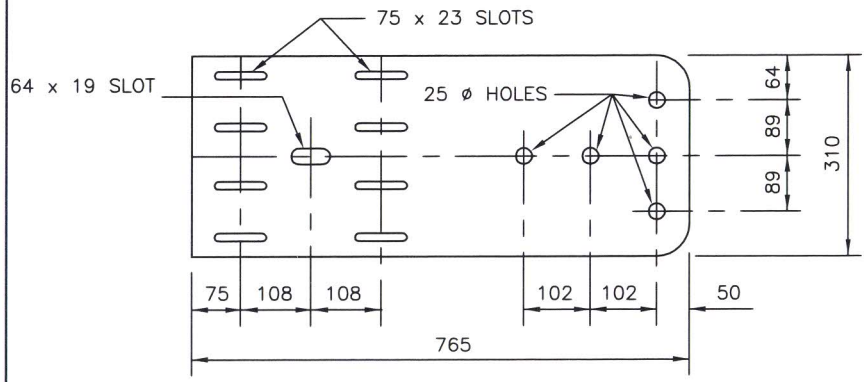

ELEVATION DETAIL OF SHOE

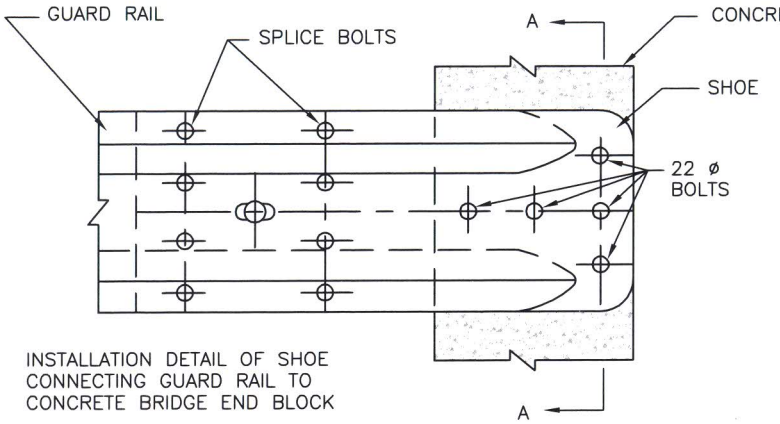

INSTALLATION DETAIL OF SHOE CONNECTING GUARD RAIL TO CONCRETE BRIDGE END BLOCK

ELEVATION DETAIL OF INSTALLED SHOE

SECTION A–A

NOTES:
1. ALL DIMENSIONS ARE IN MILLIMETRES UNLESS OTHERWISE NOTED.

Manager Highway Planning and Design

Director Highway Engineering Services

Executive Director Highway Engineering and Construction

NOVA SCOTIA
Transportation and Infrastructure Renewal

No.	REVISION
2	ADDITIONAL 25ø HOLE
1	"HS" # ADDED TO TITLE

Scale :	N.T.S.
Drawn by :	M.LABRECHE
Checked by :	J.RAE
Date of Plan :	NOV2015
File No. :	S–2009–074

MICHIGAN SHOE DETAIL
HS522

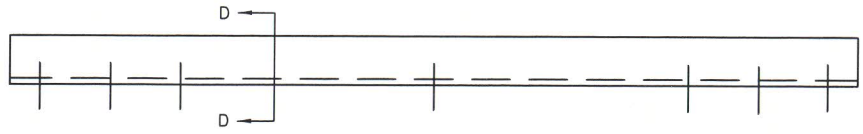

PLAN

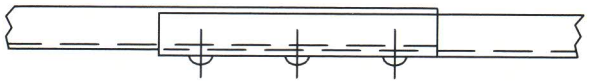

PLAN

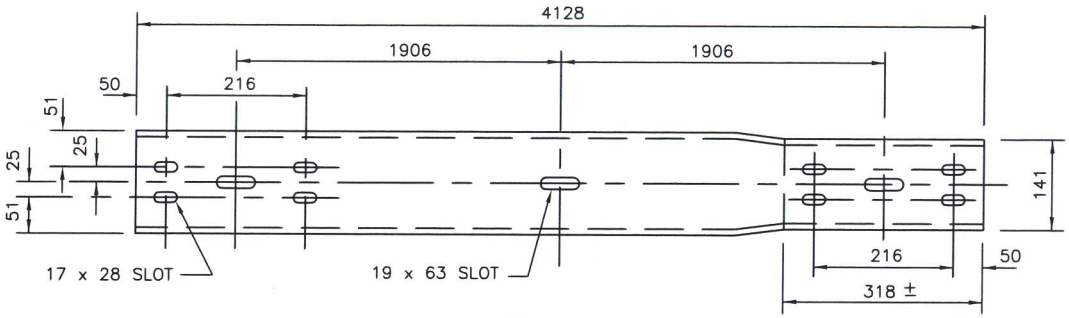

ELEVATION

SWAGGED SPLICE

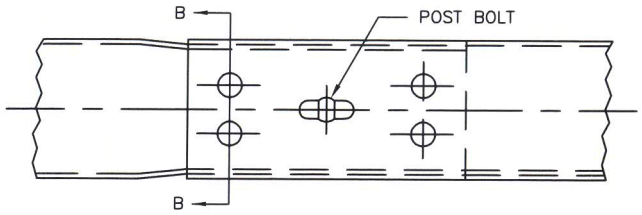

ELEVATION

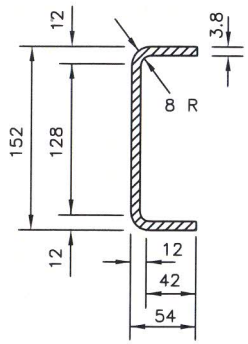

SECTION D–D

COLD ROLLED CHANNEL DETAIL

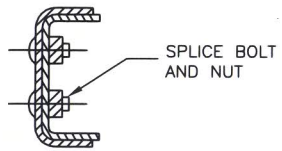

SECTION B–B

SWAGGED SPLICE DETAIL

NOTES:
1. ALL DIMENSIONS ARE IN MILLIMETRES UNLESS OTHERWISE NOTED.

Manager Highway Planning and Design

Director Highway Engineering Services

Executive Director Highway Engineering and Construction

NOVA SCOTIA
Transportation and Infrastructure Renewal

No.	REVISION
1	HS # ADDED TO TITLE

Scale :	N.T.S.
Drawn by :	M.LABRECHE
Checked by :	J.RAE
Date of Plan :	AUG2009
File No. :	S–2009–075

GUARDRAIL CHANNEL DETAIL
HS523

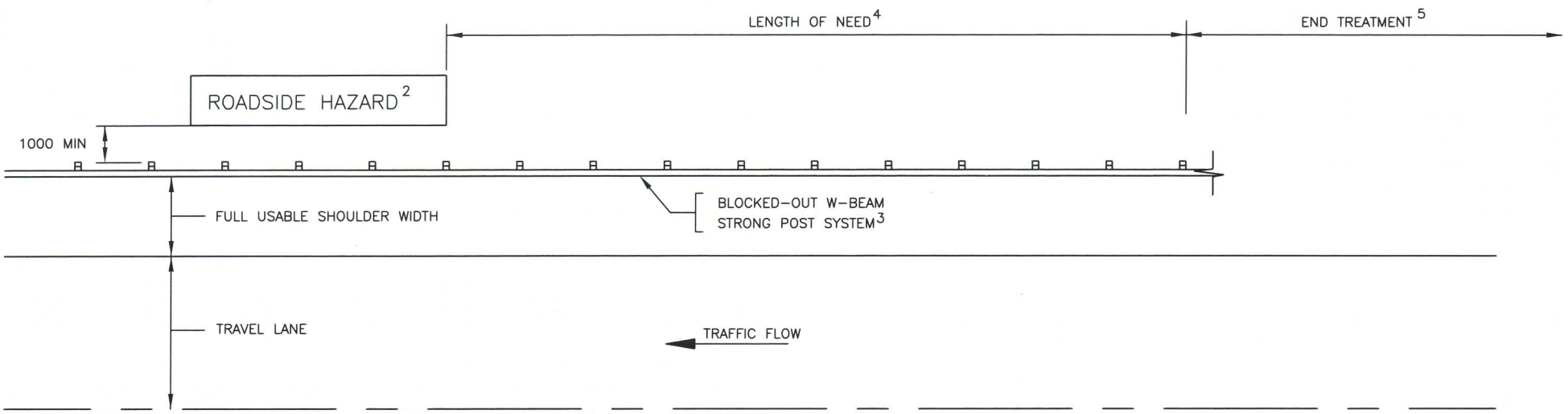

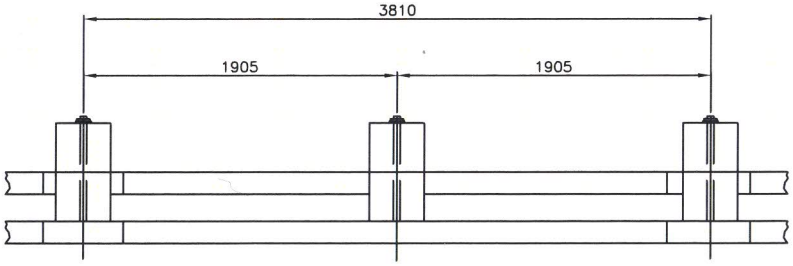

PLAN

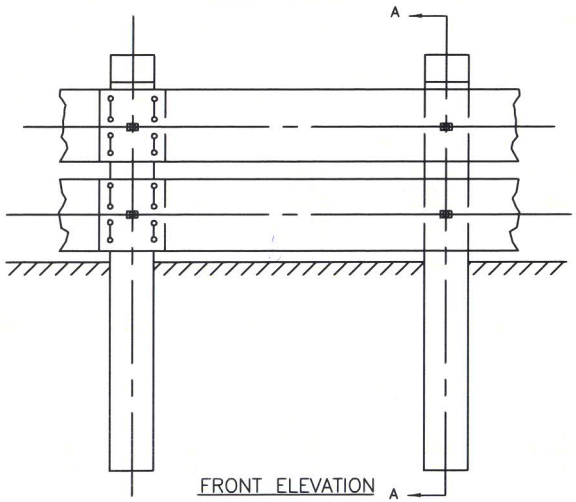

FRONT ELEVATION

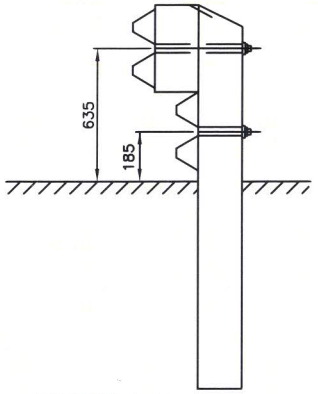

SECTION A–A

GUARDRAIL FOR HIGHWAY SIGNS 6

NOTES:
1. THIS DETAIL IS REQUIRED AT APPROACH TO HAZARD ON DIVIDED HIGHWAYS AND ON BOTH APPROACHES ON ROADS WITH TWO WAY TRAFFIC.
2. ROADSIDE HAZARD IS A BRIDGE FOUNDATION, SIGN TRUSS, CRITICAL EMBANKMENT SLOPE, ETC. INSIDE THE CLEAR ZONE.
3. POST SPACING AT 1.905m
4. SEE "TAC GEOMETRIC DESIGN GUIDE FOR CANADIAN ROADS" SEC 3.1.6
5. SEE STANDARD DRAWING S-2009-072
6. THIS DETAIL IS ONLY APPLICABLE FOR SIGNS LOCATED WITHIN THE CLEAR ZONE. SEE BEAM DETAIL, BEAM TERMINAL DETAIL, BEAM SPLICE DETAIL, POST AND BLOCK DETAIL, BOLT DETAIL, NOTE 2, NOTE 3, NOTE 4, ON STANDARD DRAWING S-2009-071.
7. ALL DIMENSIONS ARE IN MILLIMETRES UNLESS OTHERWISE NOTED.

NOVA SCOTIA
Transportation and Infrastructure Renewal

No.	REVISION
03	GUARDRAIL ADJUSTED 35mm – FEB15
02	ADDITION OF G-RAIL FOR SIGNS-FEB12
01	REMOVED FLARE INTO DITCH-JAN12

Scale : N.T.S.
Drawn by : M.LABRECHE
Checked by : J.RAE
Date of Plan : AUG2009
File No. : S-2009-076

Manager Highway Planning and Design

Director Highway Engineering Services

Executive Director Highway Engineering and Construction

GUARDRAIL MITIGATION OF ROADSIDE HAZARDS HS524

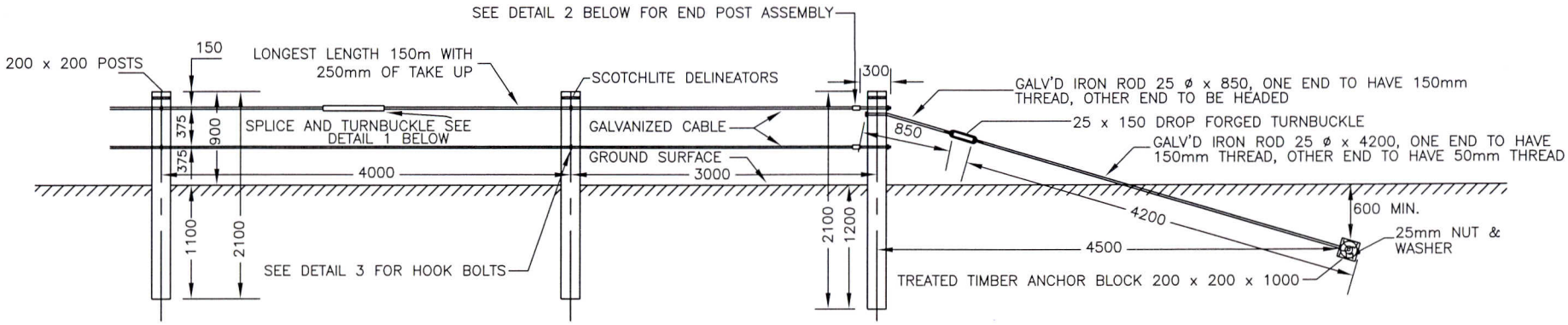

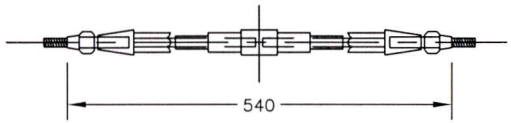

DETAIL 1: FEIGE MORROW SPLICE AND TURNBUCKLE

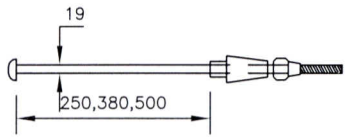

DETAIL 2: FEIGE MORROW END POST ASSEMBLY

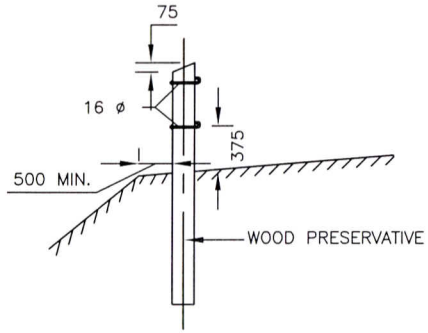

DETAIL 3: HOOK BOLTS

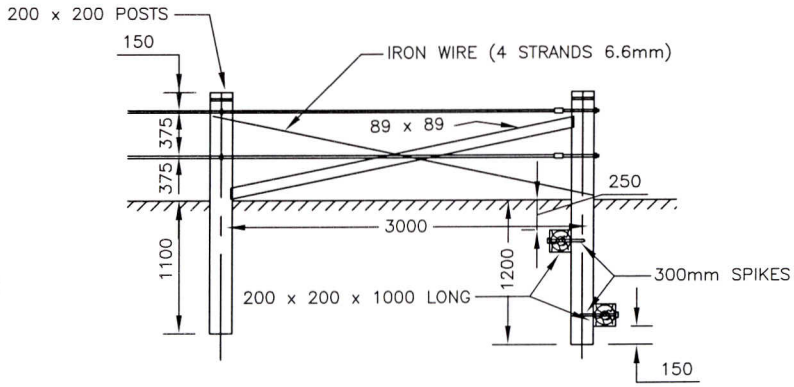

FARM ENTRANCE, ETC.

NOTES:
1. ALL DIMENSIONS ARE IN MILLIMETRES UNLESS OTHERWISE NOTED.

Manager Highway Planning and Design

Director Highway Engineering Services

Executive Director Highway Engineering and Construction

NOVA SCOTIA
Transportation and Infrastructure Renewal

No.	REVISION

Scale : N.T.S.
Drawn by : M.LABRECHE
Checked by : J.RAE
Date of Plan : AUG2009
File No. : S-2009-077

DOUBLE CABLE GUARDRAIL

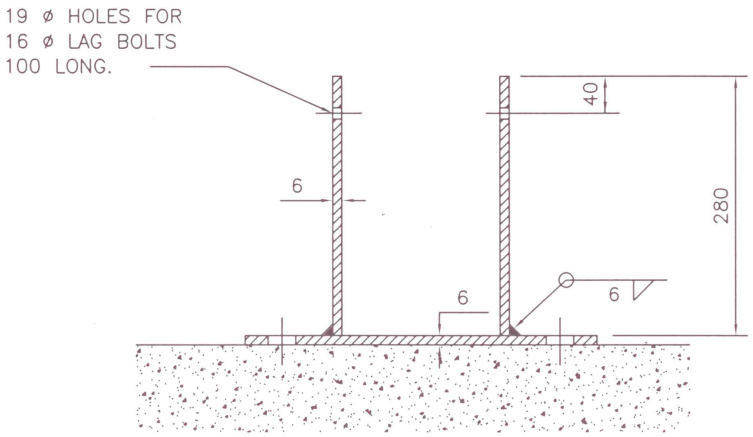

SECTION A–A

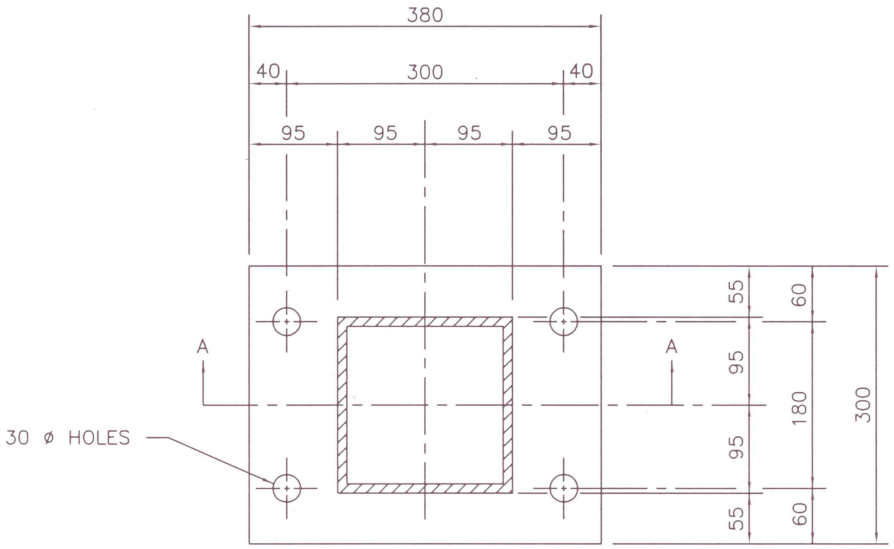

PLAN

NOTES:
1. BASE PLATE IS HELD IN PLACE BY WEDGE ANCHORS (RED HEAD PHILLIPS ANCHORS WS–7860 OR EQUIVALENT) INSTALLED TO MANUFACTURER'S SPECIFICATIONS.
2. ANCHORS ARE 22mmø x 150mm LONG WITH 100mm EMBEDMENT.
3. ALL DIMENSIONS ARE IN MILLIMETRES UNLESS OTHERWISE NOTED.

Manager Highway Planning and Design

Director Highway Engineering Services

Executive Director Highway Engineering and Construction

NOVA SCOTIA
Transportation and Infrastructure Renewal

No.	REVISION
1	HS # ADDED TO TITLE

Scale :	N.T.S.
Drawn by :	M.LABRECHE
Checked by :	J.RAE
Date of Plan :	AUG2009
File No. :	S–2009–078

GUARDRAIL ANCHOR BASE ON CONCRETE HS-525

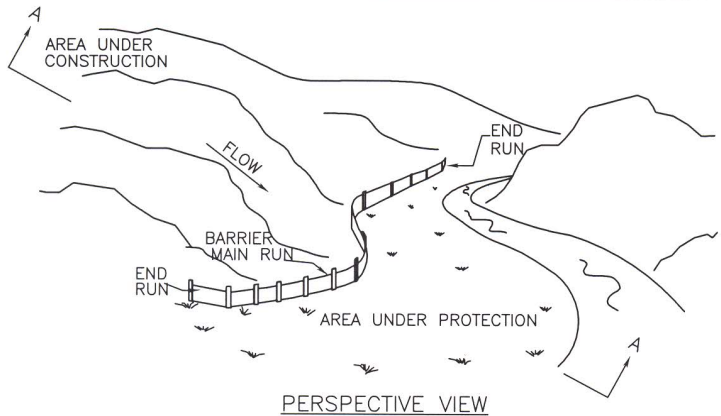

PERSPECTIVE VIEW

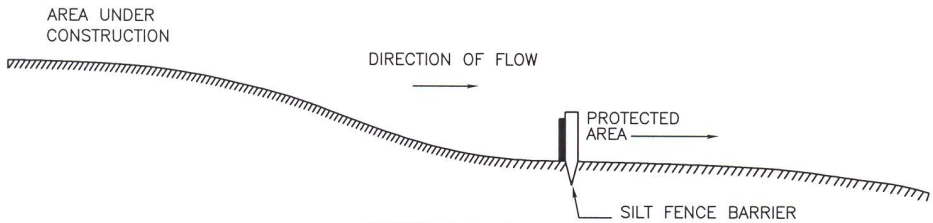

SECTION A–A

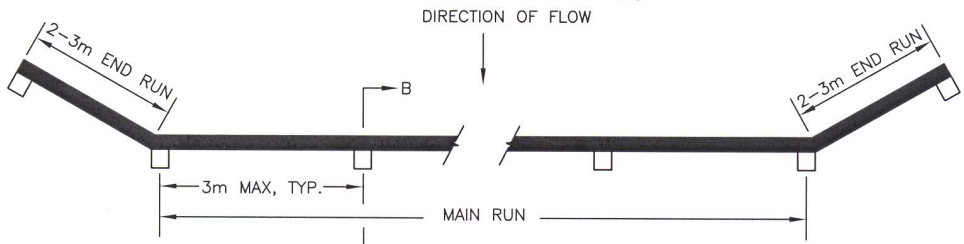

PLAN VIEW

OPTION #1

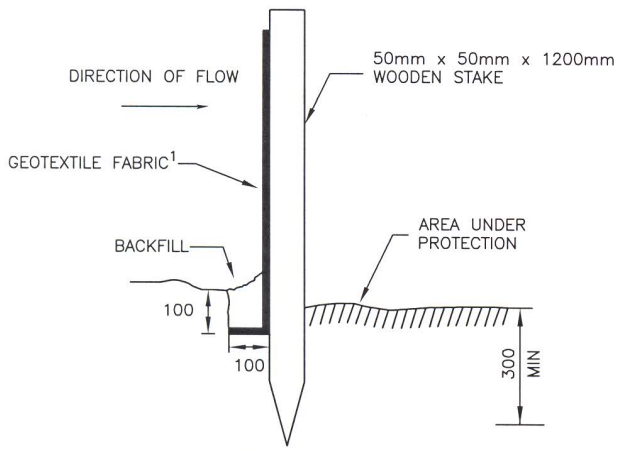

SECTION B–B

OPTION #2[3]

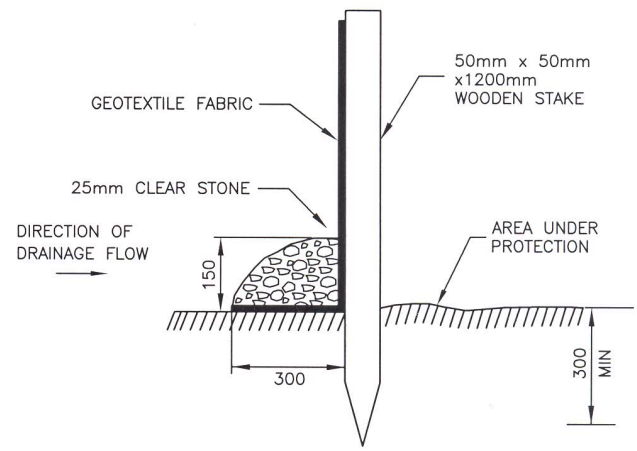

SECTION B–B

NOTES:
1. OVERALL HEIGHT OF FABRIC IS 0.9m WITH 20cm BURIED LEAVING 0.7m ABOVE GROUND LEVEL.
2. ALL DIMENSIONS ARE IN MILLIMETRES UNLESS OTHERWISE NOTED.
3. OPTION 2 PERMITTED IN AREAS WHERE CONSTRUCTION OF TRENCH IS DIFFICULT TO EXCAVATE.

Scale :	N.T.S.
Drawn by :	M.BARTEAUX
Checked by :	B.PETT
Date of Plan :	AUG2009
File No. :	S–2009–132

Manager Environmental Services

Director, Highway Engineering Services

Executive Director Highway Engineering and Construction

NOVA SCOTIA
Transportation and Infrastructure Renewal

No.	REVISION
1	Added Option 2 and Notes –APR 2011

SEDIMENT CONTROL FENCE FOR SHEET FLOW HS702

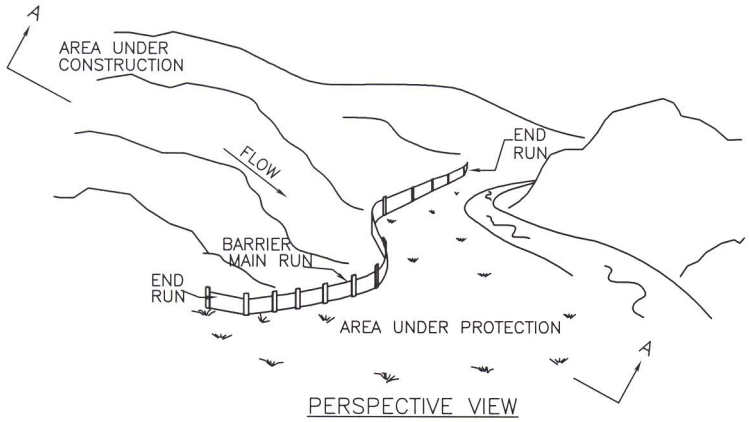

PERSPECTIVE VIEW

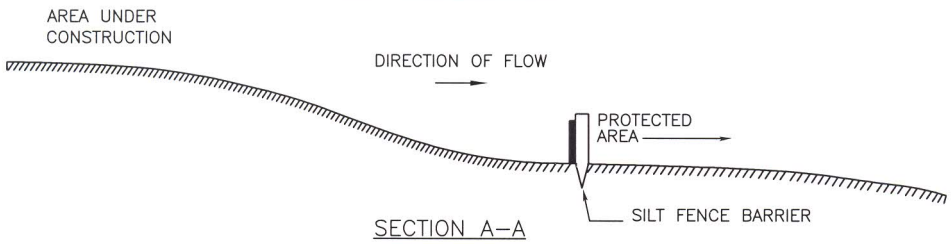

SECTION A–A

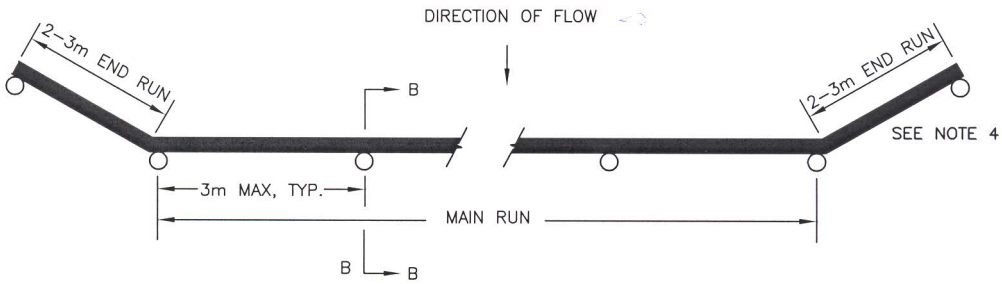

PLAN VIEW

OPTION #1

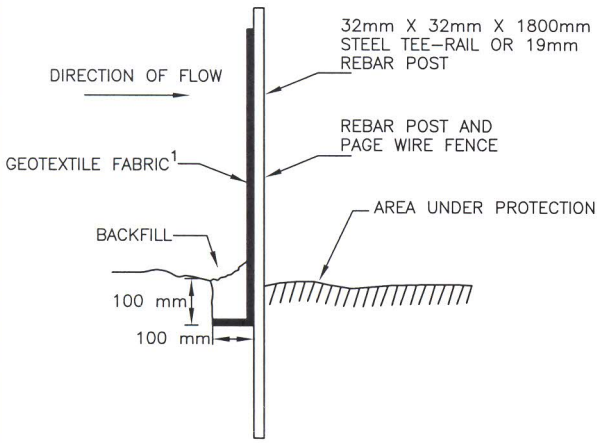

SECTION B–B

OPTION #2

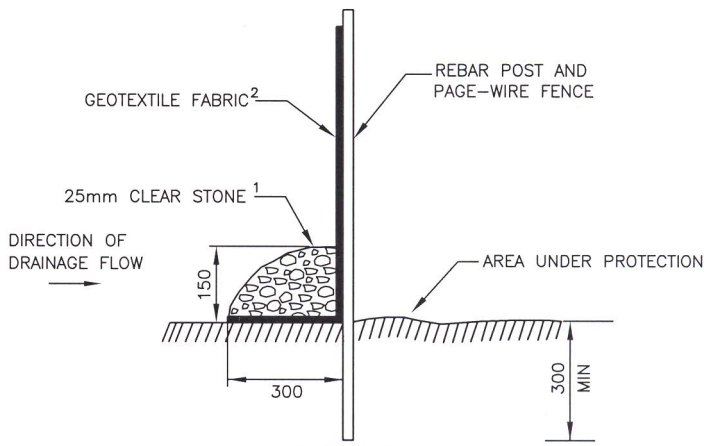

SECTION B–B

NOTES:
1. CLEAR STONE IS TO BE 25mm; STRAW BALES MAY BE USED IN ADDITION TO CLEAR STONE FOR ADDITIONAL FILTRATION.
2. OVERALL HEIGHT OF FABRIC IS 1.8m WITH 25cm BURIED LEAVING APPROXIMATELY 1.5m ABOVE GROUND LEVEL.
3. ALL DIMENSIONS ARE IN MILLIMETRES UNLESS OTHERWISE NOTED.
4. CORNER, END AND STRAINING POSTS SHALL BE DOUBLE POSTED WITH STEEL TEE–RAIL OR REBAR

Scale :	N.T.S.
Drawn by :	M.BARTEAUX
Checked by :	B.PETT
Date of Plan :	AUG2009
File No. :	S–2009–132A

Manager Environmental Services

Director Highway Engineering Services

Executive Director Highway Engineering and Construction

NOVA SCOTIA
Transportation and Infrastructure Renewal

No.	REVISION
1	Option 2 and Note 4 Added –APR 2011

SEDIMENT CONTROL FENCE FOR SHEET FLOW TYPE 2

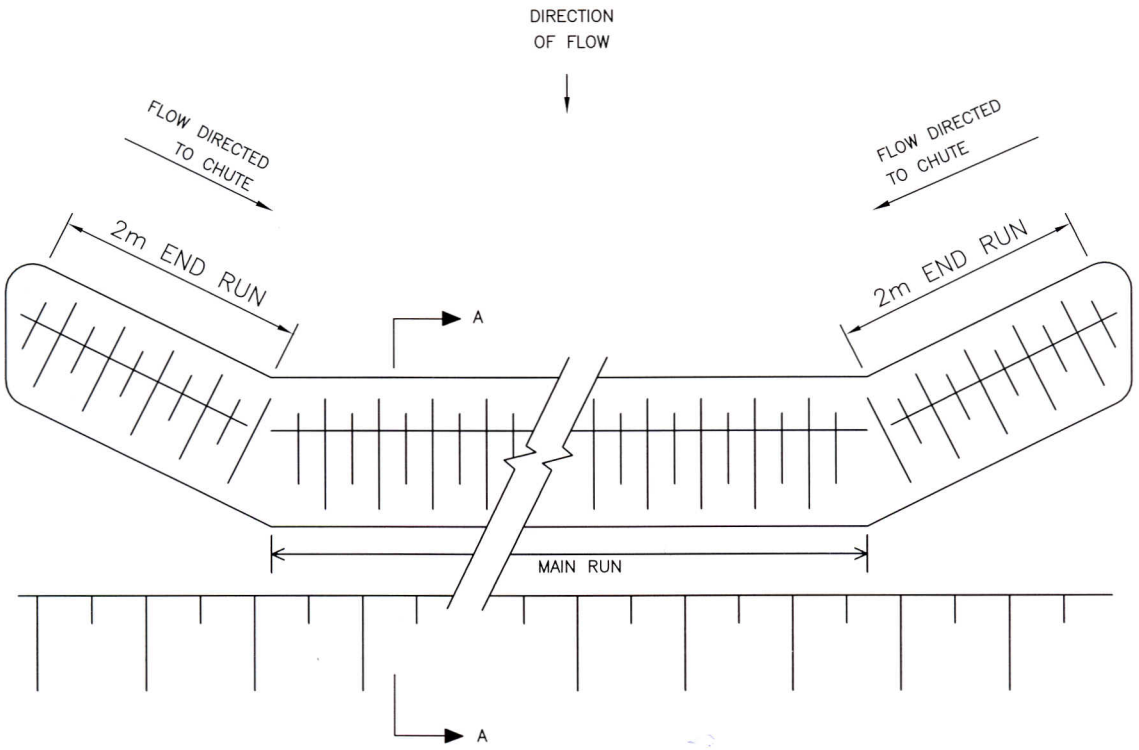

PLAN VIEW

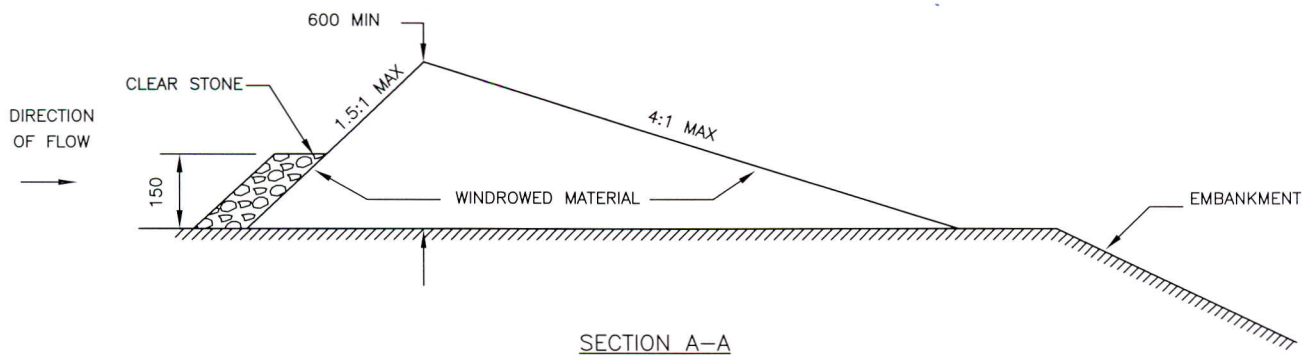

SECTION A–A

NOTES:
1. ALL DIMENSIONS ARE ARE IN MILLIMETRES UNLESS OTHERWISE NOTED.

Scale :	N.T.S.
Drawn by :	M.BARTEAUX
Checked by :	B.PETT
Date of Plan :	AUG2009
File No. :	S–2009–133

Manager Environmental Services

Director Highway Engineering Services

Exeeutive Director Highway Engineering and Construction

NOVA SCOTIA
Transportation and Infrastructure Renewal

No.	REVISION

BERM BARRIER
HS703

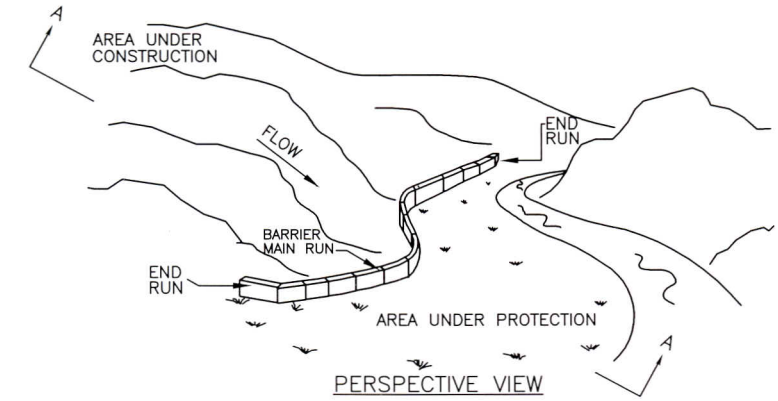

PERSPECTIVE VIEW

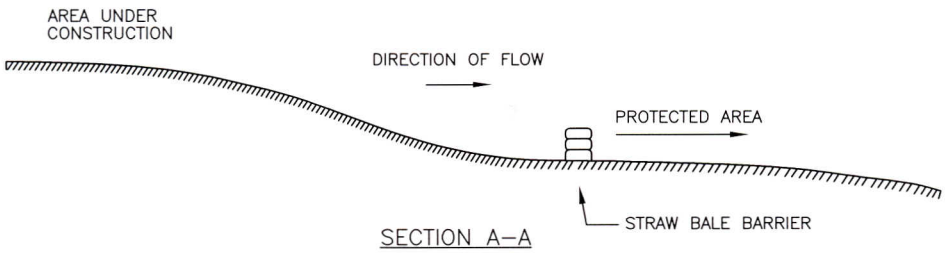

SECTION A–A

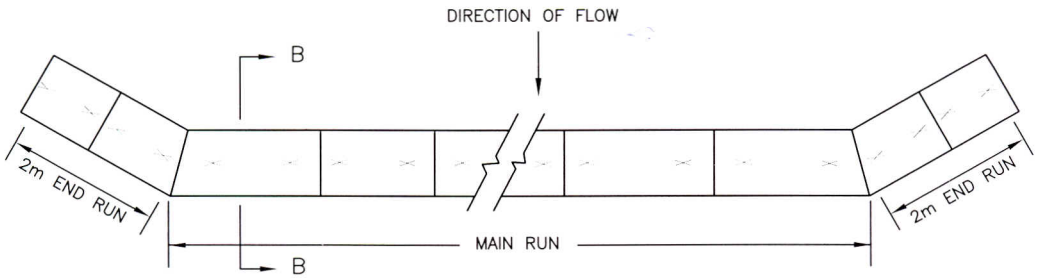

PLAN VIEW

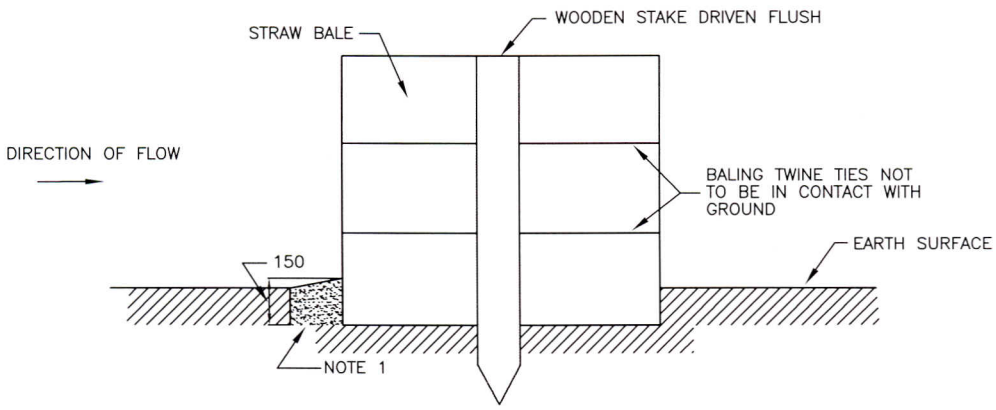

SECTION B–B

NOTES:
1. BALANCE OF EXCAVATED TRENCH TO BE BACKFILLED FOLLOWING BALE PLACEMENT.
2. ALL DIMENSIONS ARE ARE IN MILLIMETRES UNLESS OTHERWISE NOTED.

Scale :	N.T.S.
Drawn by :	M.BARTEAUX
Checked by :	B.PETT
Date of Plan :	AUG2009
File No. :	S–2009–134

Manager Environmental Services

Director Highway Engineering Services

Executive Director Highway Engineering and Construction

NOVA SCOTIA
Transportation and Infrastructure Renewal

No.	REVISION

STRAW BALE BARRIER FOR SHEET FLOW HS701

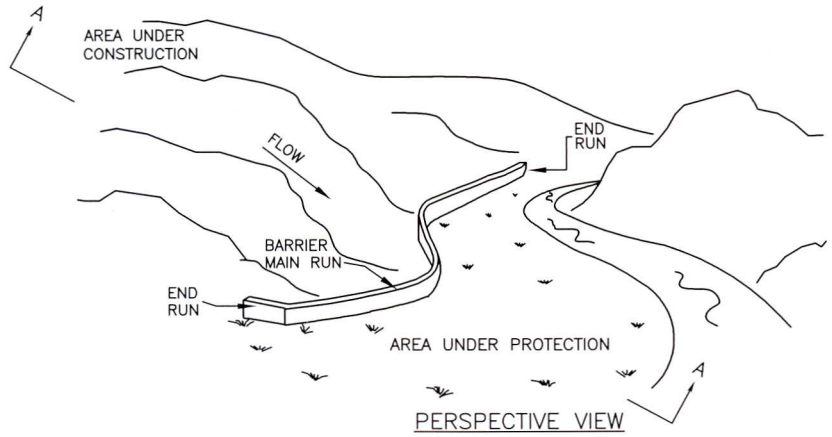

PERSPECTIVE VIEW

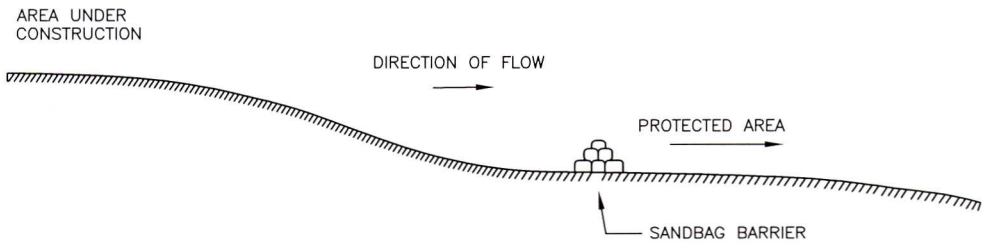

SECTION A–A

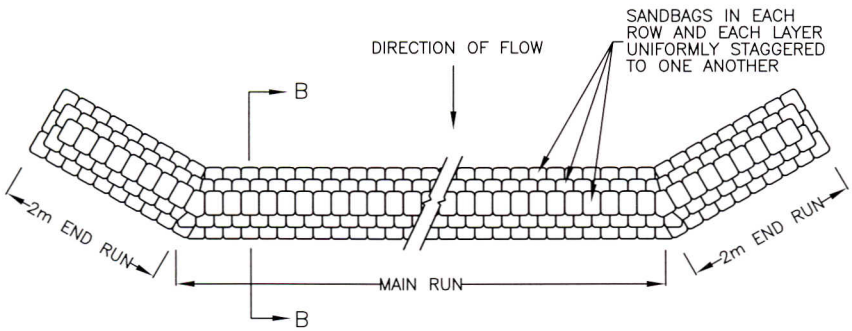

PLAN VIEW

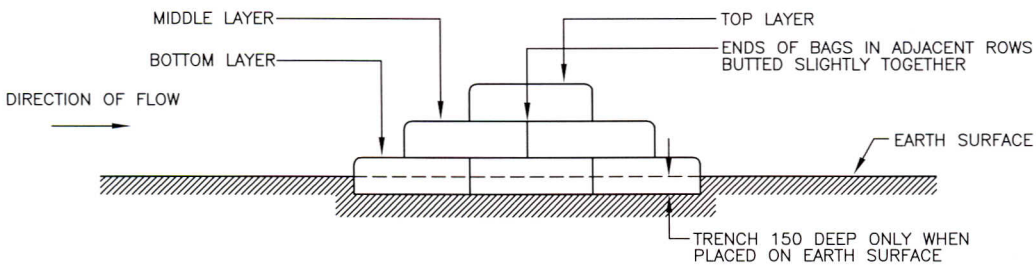

SECTION B–B

NOTES:
1. ALL DIMENSIONS ARE IN MILLIMETRES UNLESS OTHERWISE NOTED.

Scale :	N.T.S.
Drawn by :	M.BARTEAUX
Checked by :	B.PETT
Date of Plan :	AUG2009
File No. :	S–2009–135

Manager Environmental Services

Director Highway Engineering Services

Executive Director Highway Engineering and Construction

NOVA SCOTIA
Transportation and Infrastructure Renewal

No.	REVISION

SANDBAG BARRIER FOR SHEET FLOW HS704

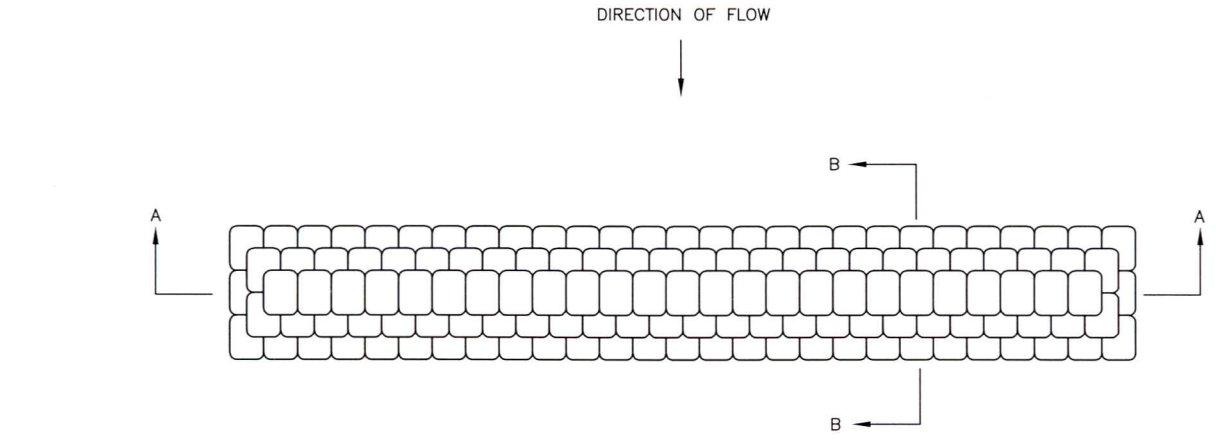

PLAN

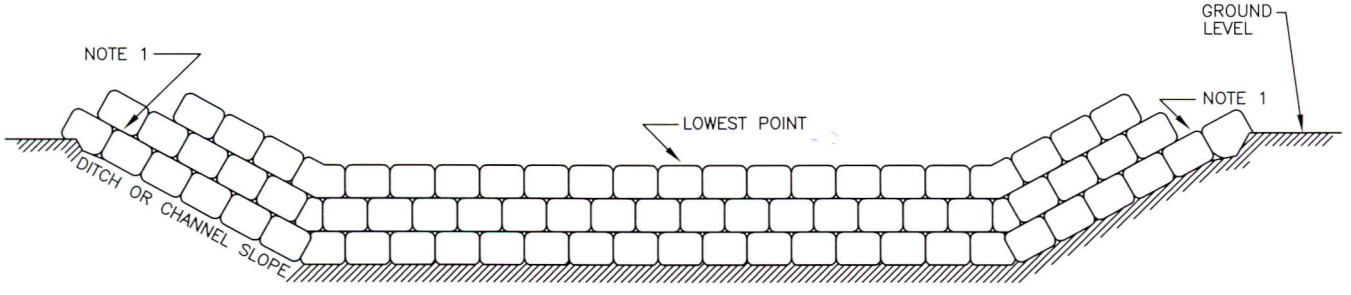

SECTION A–A
FLAT BOTTOM DITCH

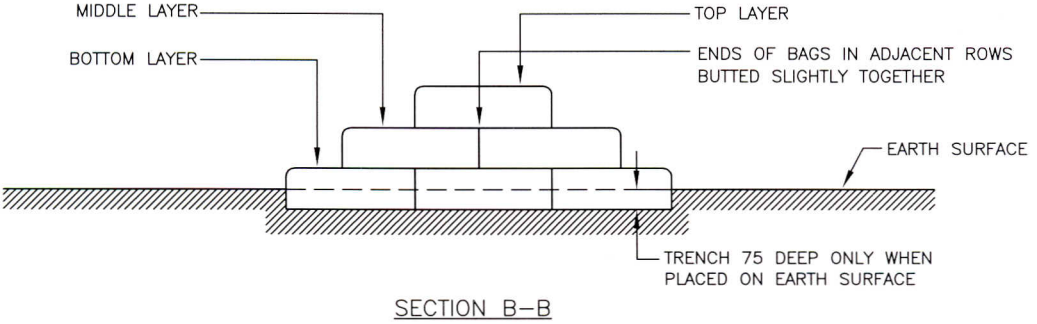

SECTION B–B

NOTES:
1. END OF FLOW CHECK AT GROUND LEVEL TO BE HIGHER THAN THE LOWEST POINT OF FLOW CHECK. SUFFICIENT SANDBAGS ARE TO BE PLACED TO PREVENT SCOURING.
2. ALL DIMENSIONS ARE IN MILLIMETRES UNLESS OTHERWISE NOTED

Scale :	N.T.S.
Drawn by :	M.BARTEAUX
Checked by :	B.PETT
Date of Plan :	AUG2009
File No. :	S–2009–136

Manager Environmental Services

Director Highway Engineering Services

Executive Director Highway Engineering and Construction

NOVA SCOTIA
Transportation and Infrastructure Renewal

No.	REVISION

SANDBAG FLOW CHECKS
HS706

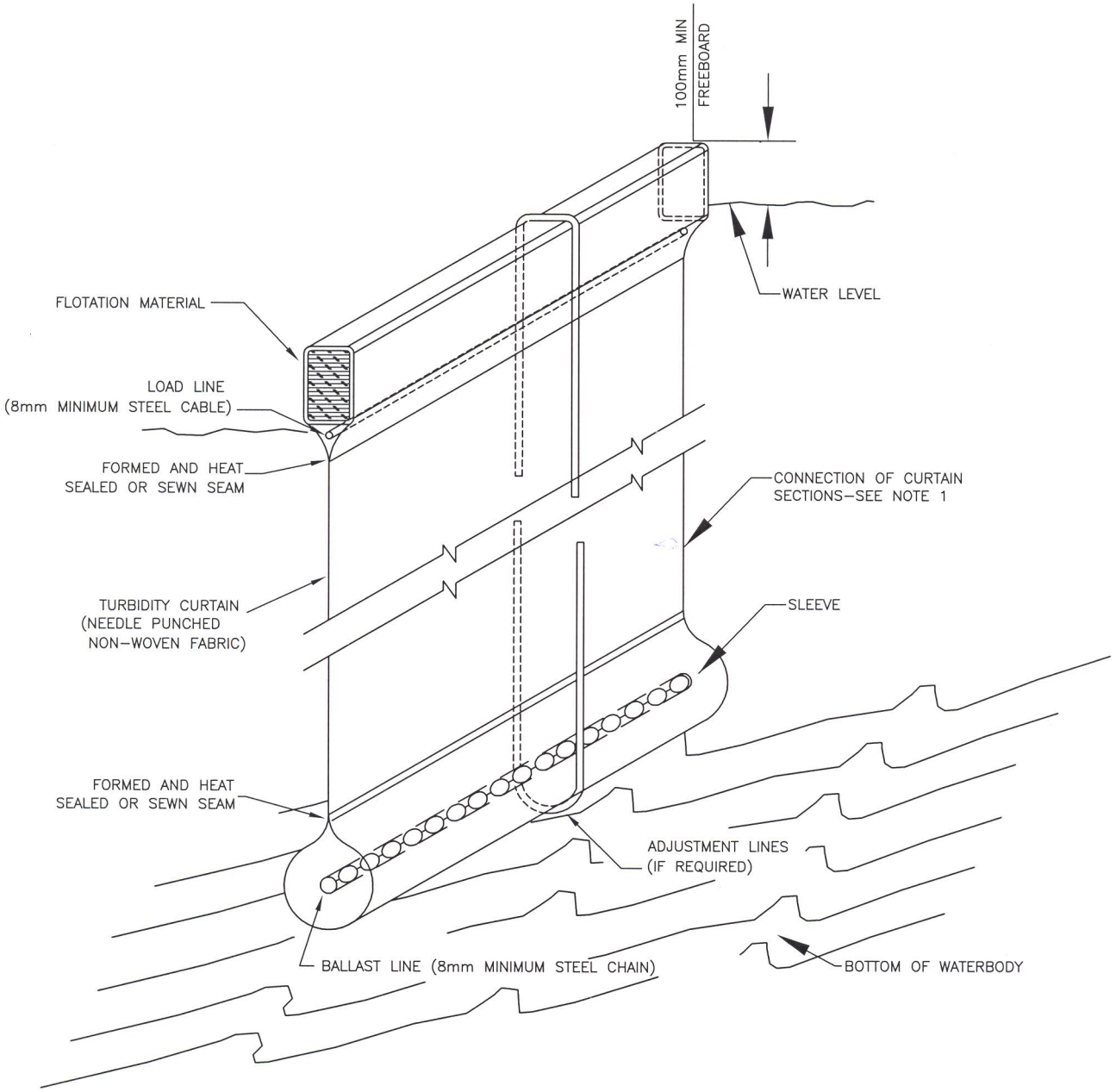

OBLIQUE VIEW

NOTES:
1. WHERE SECTIONS OF TURBIDITY CURTAIN ARE JOINED IT MUST PROVIDE A CONTINUOUS RUN AND A CONTINUOUS SEAL

Scale :	N.T.S.
Drawn by :	M.BARTEAUX
Checked by :	B.PETT
Date of Plan :	AUG2009
File No. :	S–2009–137

Manager Environmental Services

Director Highway Engineering Services

Executive Director Highway Engineering and Construction

NOVA SCOTIA
Transportation and Infrastructure Renewal

No.	REVISION
1	NOTE 1 REVISED, APR. 2011

TURBIDITY CURTAIN SEAM DETAIL
HS-709

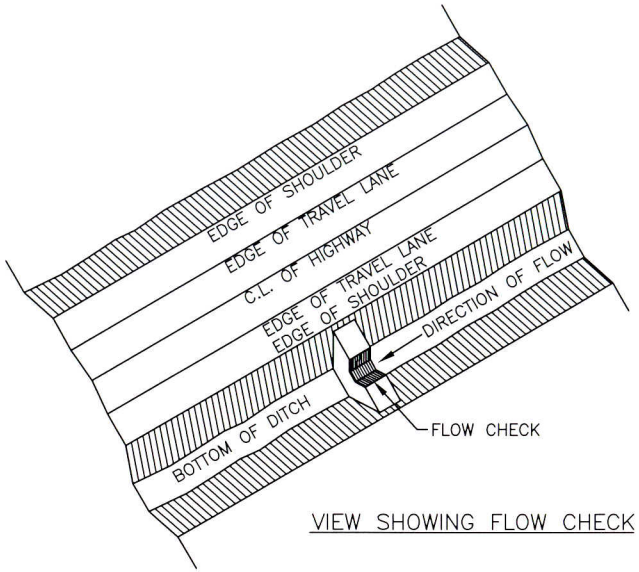

VIEW SHOWING FLOW CHECK

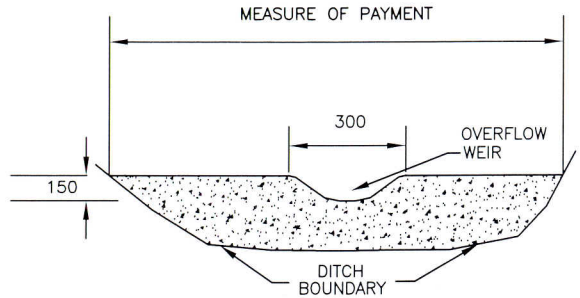

FLOW CHECK NOTCH

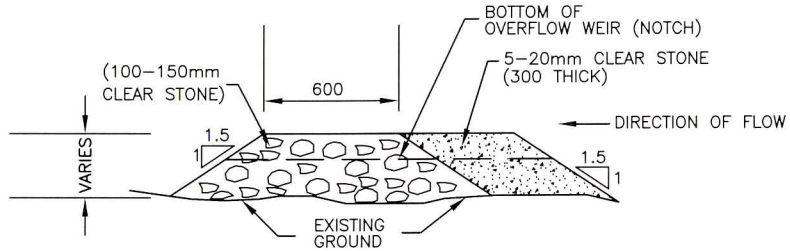

CROSS SECTION OF CONSTRUCTION

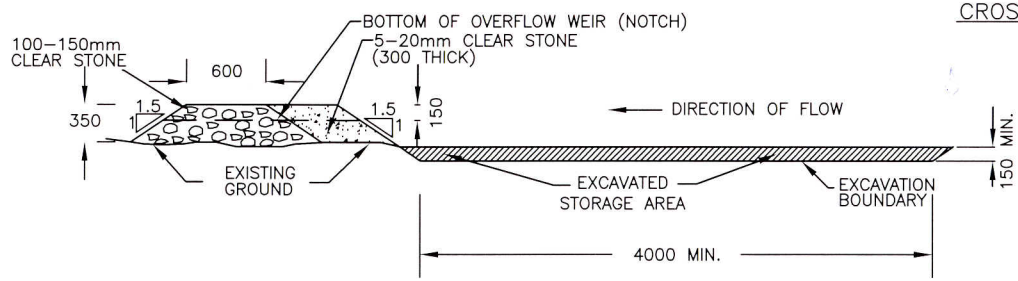

CROSS SECTION OF FINISHED FLOW CHECK

NOTES:
1. ALL DIMENSIONS ARE IN MILLIMETRES UNLESS OTHERWISE NOTED

Manager Environmental Services

Director Highway Engineering Services

Executive Director Highway Engineering and Construction

NOVA SCOTIA
Transportation and Infrastructure Renewal

No.	REVISION

Scale :	N.T.S.
Drawn by :	M.BARTEAUX
Checked by :	B.PETT
Date of Plan :	AUG2009
File No. :	S–2009–138

ROCK FLOW CHECKS
HS707

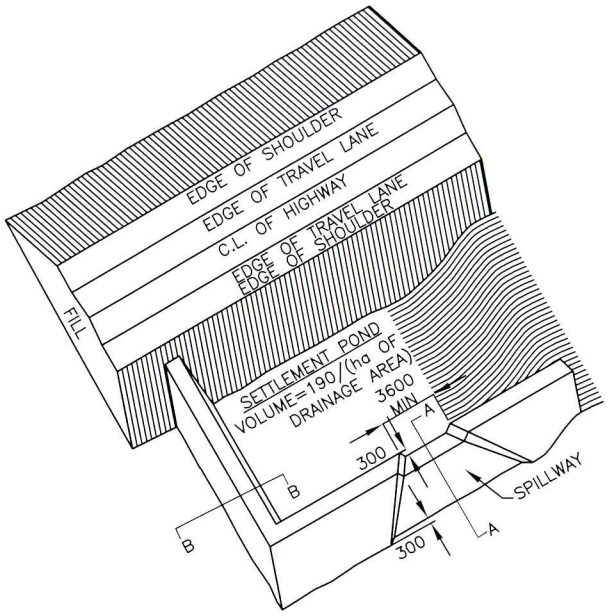

VIEW SHOWING SETTLEMENT POND

DIRECTION OF FLOW

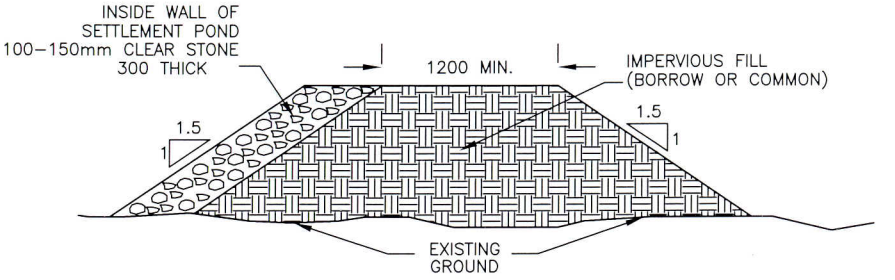

CROSS SECTION OF WALL OF SETTLEMENT POND

SECTION B–B

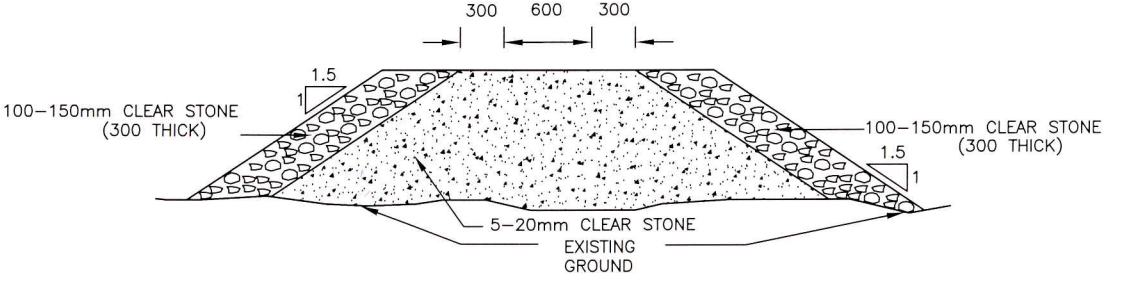

CROSS SECTION OF SPILLWAY

SECTION A–A

NOTES:
1. TOP OF SPILLWAY TO BE CONSTRUCTED 300mm LOWER THAN TOP OF SETTLEMENT POND WALL.
2. OUTSIDE FACE OF SPILLWAY TO BE OFFSET INWARD 300mm FROM OUTSIDE FACE OF SETTLEMENT POND WALL.
3. INSIDE FACES OF BOTH SPILLWAY AND SETTLEMENT POND WALL ARE TO BE FLUSH.
4. ALL DIMENSIONS ARE IN MILLIMETRES UNLESS OTHERWISE NOTED.

Manager Environmental Services

Director Highway Engineering Services

Executive Director Highway Engineering and Construction

NOVA SCOTIA
Transportation and Infrastructure Renewal

No.	REVISION

Scale : N.T.S.
Drawn by : M.BARTEAUX
Checked by : B.PETT
Date of Plan : AUG2009
File No. : S–2009–139

SETTLEMENT PONDS
HS708

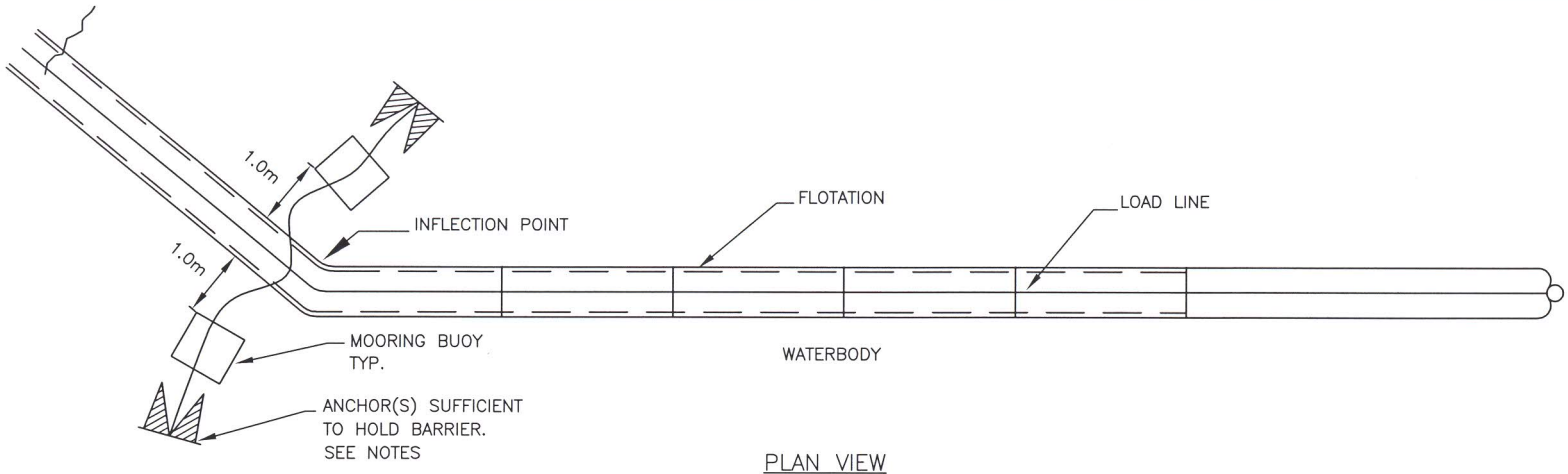

PLAN VIEW

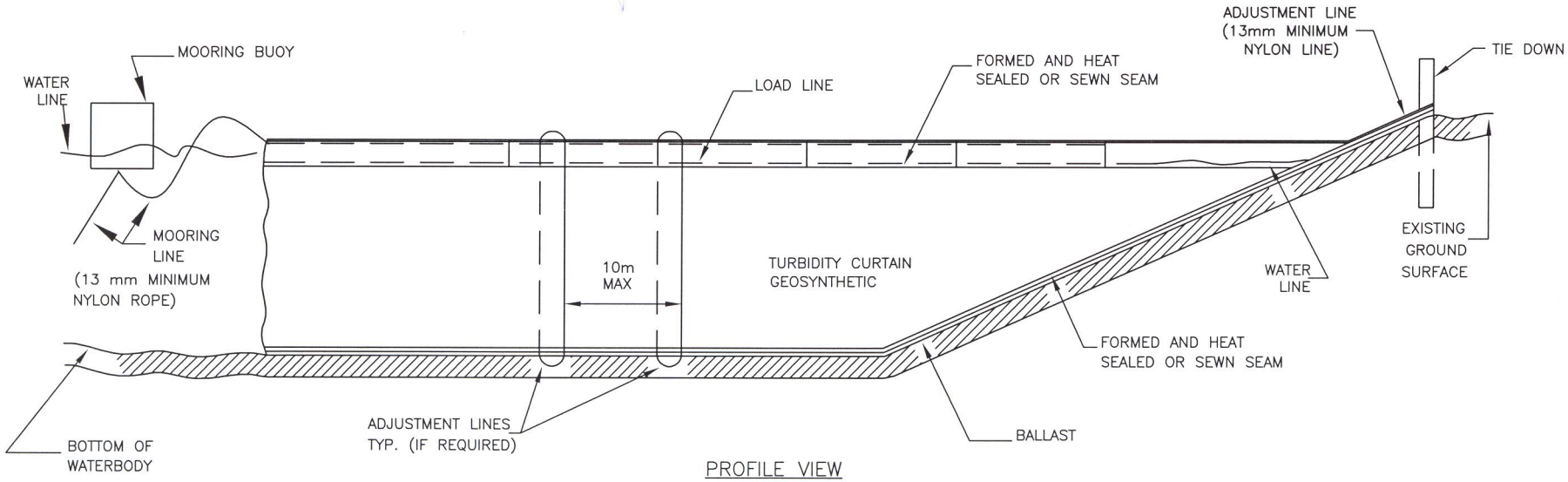

PROFILE VIEW

NOTES:
1. ANCHORING IS TO PROVIDE POSITIVE POSITIONING FOR TURBIDITY CURTAIN.
2. THE NUMBER AND SIZE OF ANCHORS AND THEIR LOCATION TO BE DETERMINED BY THE SIZE OF THE CURTAIN AND ITS LOCATION.

Manager Environmental Services

Director Highway Engineering Services

Executive Director Highway Engineering and Construction

NOVA SCOTIA
Transportation and Infrastructure Renewal

No.	REVISION
1	Note 2 added –APR 2011

Scale :	N.T.S.
Drawn by :	M.BARTEAUX
Checked by :	B.PETT
Date of Plan :	AUG2009
File No. :	S–2009–140

TURBIDITY CURTAIN
HS710

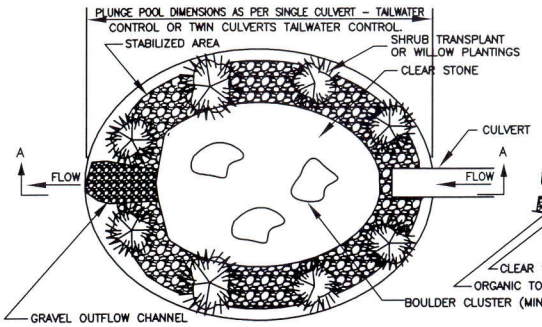

TYPICAL DETAIL ENHANCED POOL

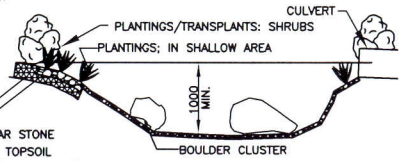

SECTION A–A

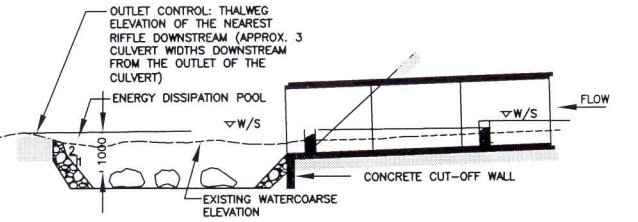

SECTION B–B

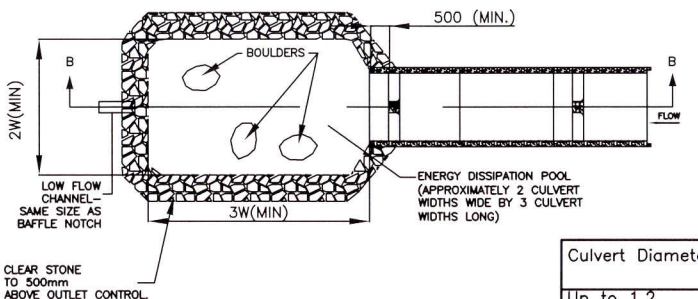

SINGLE CULVERT – TAILWATER CONTROL

Table 1

Culvert Diameter (m)	Average Size of Clear Stone (mm)	Gravel Thickness (mm)
Up to 1.2 (4 feet)	150 (use type C1) (6 inch)	300 (12 inch)
1.2 – 2.1 (4–7 feet)	300 (12 inch)	450 (18 inch)
2.1 – 3.0 (7–10 feet)	600 (24 inch)	750 (30 inch)

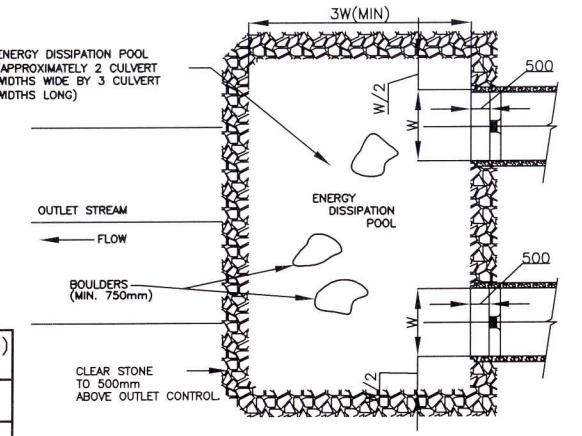

TWIN CULVERTS – TAIL WATER CONTROL

Notes:

1. Construct culvert and pool 'in the dry' as per typical details. Depth of up to 2.5 m will provide better cover (1 m minimum depth). Culvert should backflood 300mm. Rootwads may also be used to protect the bank and enhance fish cover.
2. Bottom of pool, outflow channel, and adjacent banks to 0.5 m above the low–flow outlet control should be covered with Clear Stone that is sized according to flood velocities produced by a one in a hundred year storm (hence dependent upon culvert size; see Table 1 above). Gravel depth will also vary depending on flow, from approximately 300 to 750 mm. Note that no filter fabric or any form of geotextile shall be used in the construction of the pool.
3. The stream bottom at the outflow channel (transition zone to the existing stream) shall contain finer gravel approximating that in the existing stream (to fill the voids in the Clear Stone and thereby prevent problems with fish passage during low flows).
4. Install boulder cluster in the pool (3 to 5 pieces; lead rock up to 1000 mm diameter; remaining rocks should be 750–850 mm diameter). Centers of boulders should be 2 m apart.
5. (A) The pool outlet channel shall be designed to have similar cross–sectional area and shape as the notch in culvert baffles. The top of the most downstream baffle will be at the same elevation as the streambed at the top of the pool outlet channel.
   (B) In non–baffle culverts, the width of the pool outlet channel shall be a maximum of one third of the culvert's width (W) and the invert of pool outlet shall be 0.2W higher than the culvert invert.
6. Following completion of the pool and outflow channel, place "Specialty Topsoil for Riparian Zone Vegetated Buffer" in a 3 m–wide, 200 mm–thick, layer around the pool (see Special Provision for Specialty Topsoil). Seed and cover immediately afterwards (see below).
7. Seed or hydroseed the area as per Standard Specification Division 7, Section 5.
8. Place dry mulch or erosion control blanket (ECB) over the "Specialty Topsoil" as per Standard Specification Division 7, Sections 6 and 7. For slopes greater than 3:1, use ECB.
9. Place shrubs, vegetation transplants and, or willow live–stakes in the mulch layer or slits in the ECB as per specifications of TIR's Vegetation Specialist. Spacing shall typically be at 0.5 m centers over approximately 30% of the area.
10. As directed by TIR's Vegetation Specialist, ensure watering of the new vegetation and transplants until the vegetation is established.
11. All dimensions are in millimetres unless otherwise noted.

Manager, Environmental Services

Director, Highway Engineering Services

Executive Director Highway Engineering and Construction

NOVA SCOTIA
Transportation and Infrastructure Renewal

No.	REVISION

Scale :	N.T.S.
Drawn by :	K.BODDY
Checked by :	B.PETT
Date of Plan :	AUG2009
File No. :	S–2009–141

ENHANCED ENERGY DISSIPATION POOLS

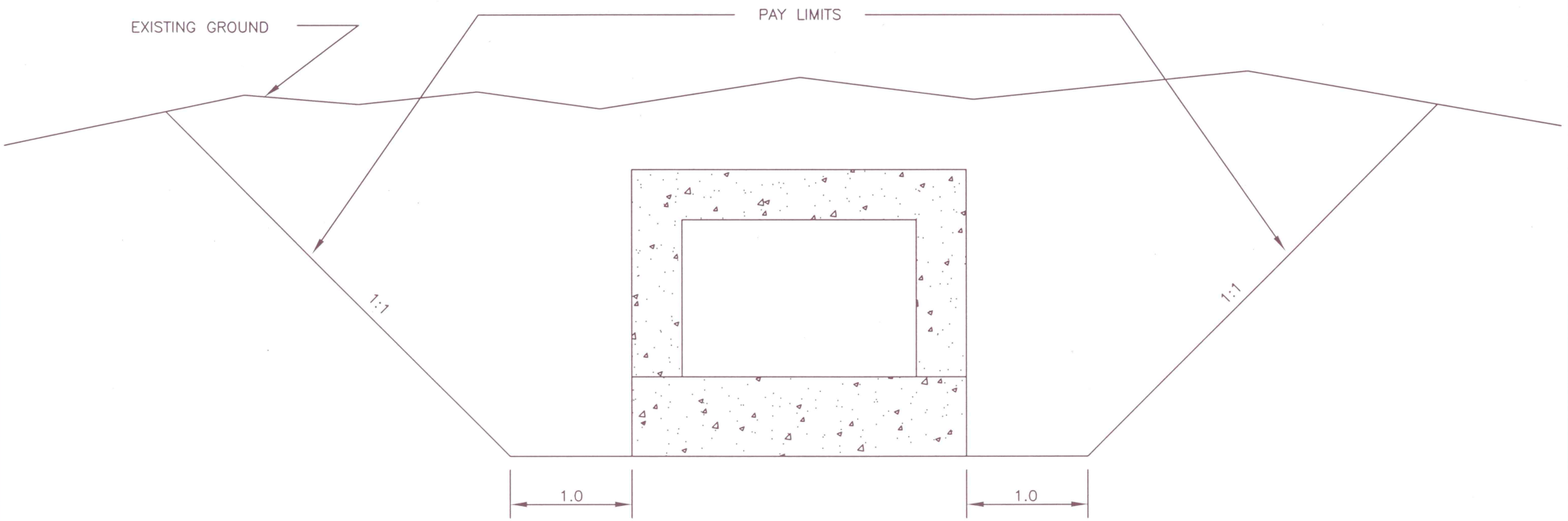

NOTES:
1. ALSO USED FOR ANY STRUCTURES THAT REQUIRE CAST IN PLACE CONCRETE (INCLUDING FOOTINGS AND FORMATIONS)
2. THIS CROSS SECTION REPRESENTS MAXIMUM PAY LIMITS FOR FOUNDATION EXCAVATIONS
3. IF THE BOTTOM WIDTH OF THE EXCAVATION IS LESS OR IF THE SIDE SLOPES ARE STEEPER THAN INDICATED, THE SECTIONAL AREA WILL BE COMPUTED ACCORDINGLY.
4. EXCEPT IN THOSE CASES WHERE DIMENSIONS FOR EXCAVATION ARE INDICATED ON INDIVIDUAL PLANS, THE DIMENSIONS USED IN COMPUTING THE SECTIONAL AREA OF FOUNDATION EXCAVATION FOR TIMBER STRUCTURES OR STRUCTURES OF ALL SIZES REQUIRING CAST IN PLACE CONCRETE WILL BE AS SHOWN.
5. ALL DIMENSIONS ARE IN METRES UNLESS OTHERWISE NOTED.

NOVA SCOTIA
Transportation and Infrastructure Renewal

No.	REVISION
1	HS # ADDED TO TITLE

Scale :	N.T.S.
Drawn by :	M.W.L.
Checked by :	NAME
Date of Plan :	Sept 2009
File No. :	S–2009–142

Manager Highway Planning and Design

Director Highway Engineering Services

Executive Director Highway Engineering and Construction

FOUNDATION EXCAVATION FOR BUILT-IN-PLACE STRUCTURES HS-203

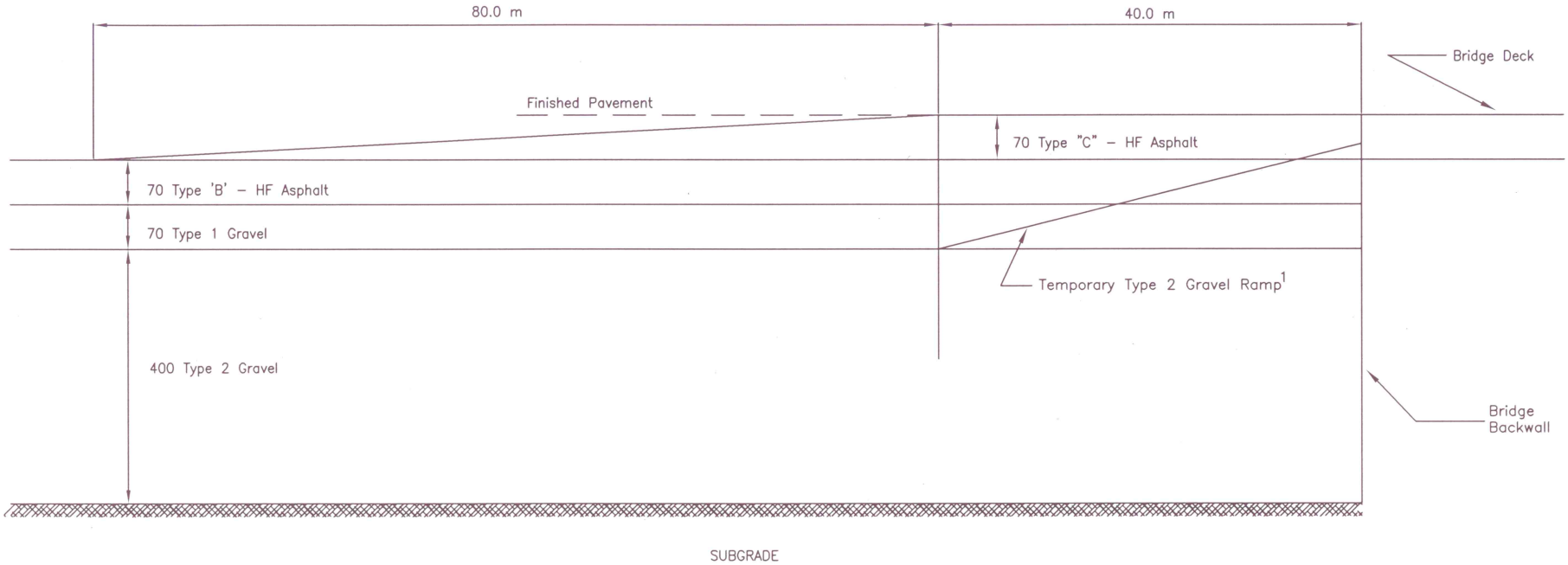

NOTES:
1. TO BE REMOVED FOR PLACEMENT OF TYPE 1 GRAVEL.
2. ALL DIMENSIONS ARE IN MILLIMETRES UNLESS OTHERWISE NOTED.

Manager Highway Planning and Design

Director Highway Engineering Services

Executive Director Highway Engineering and Construction

NOVA SCOTIA
Transportation and Infrastructure Renewal

No.	REVISION
1	HS # ADDED TO TITLE

Scale : N.T.S.
Drawn by : M.W.L.
Checked by : NAME
Date of Plan : Sept. 2009
File No. : S–2009–143

PAVING APPROACH TO BRIDGES ON 100 SERIES HIGHWAYS HS-401

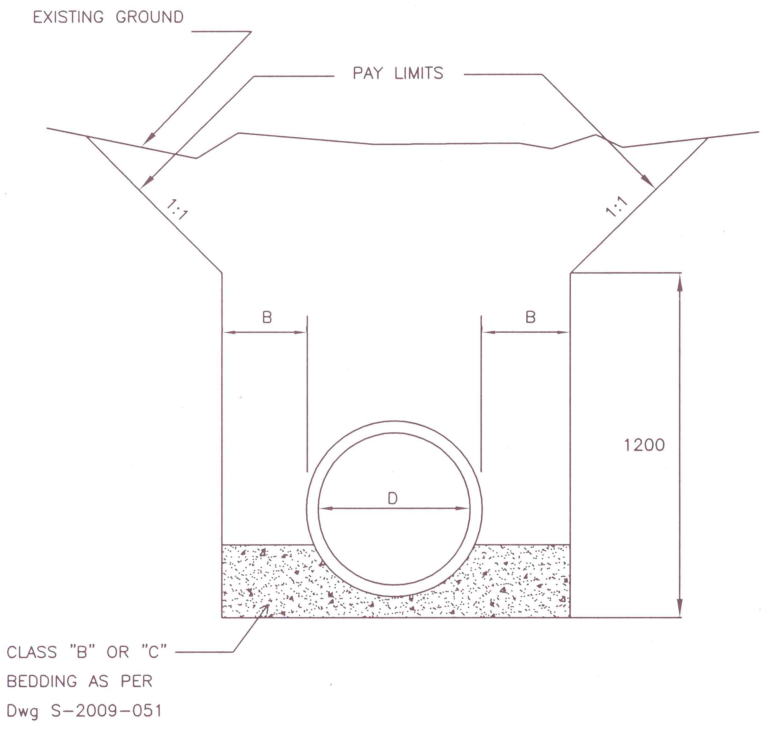

PIPE DIAMETER, D (INSIDE)	DIMENSION B
UP TO 500	300
501 TO 1200	400
OVER 1200 OR ANY OTHER PRECAST SECTION	500

NOTES:
1. THE CROSS SECTION REPRESENTS MAXIMUM PAY LIMITS FOR FOUNDATION EXCAVATION. IF THE BOTTOM WIDTH IS LESS OR IF THE SIDE SLOPES ARE STEEPER THAN INDICATED, THE SECTIONAL AREA WILL BE COMPUTED ACCORDINGLY.
2. ALL DIMENSIONS ARE IN MILLIMETRES UNLESS OTHERWISE NOTED

Scale : N.T.S.
Drawn by : M.W.L.
Checked by :
Date of Plan : Sept. 2009
File No. : S-2009-144

Manager Highway Planning and Design

Director Highway Engineering Services

Executive Director Highway Engineering and Construction

NOVA SCOTIA
Transportation and Infrastructure Renewal

No.	REVISION
1	HS # ADDED TO TITLE

FOUNDATION EXCAVATION LIMITS FOR CULVERTS HS-528

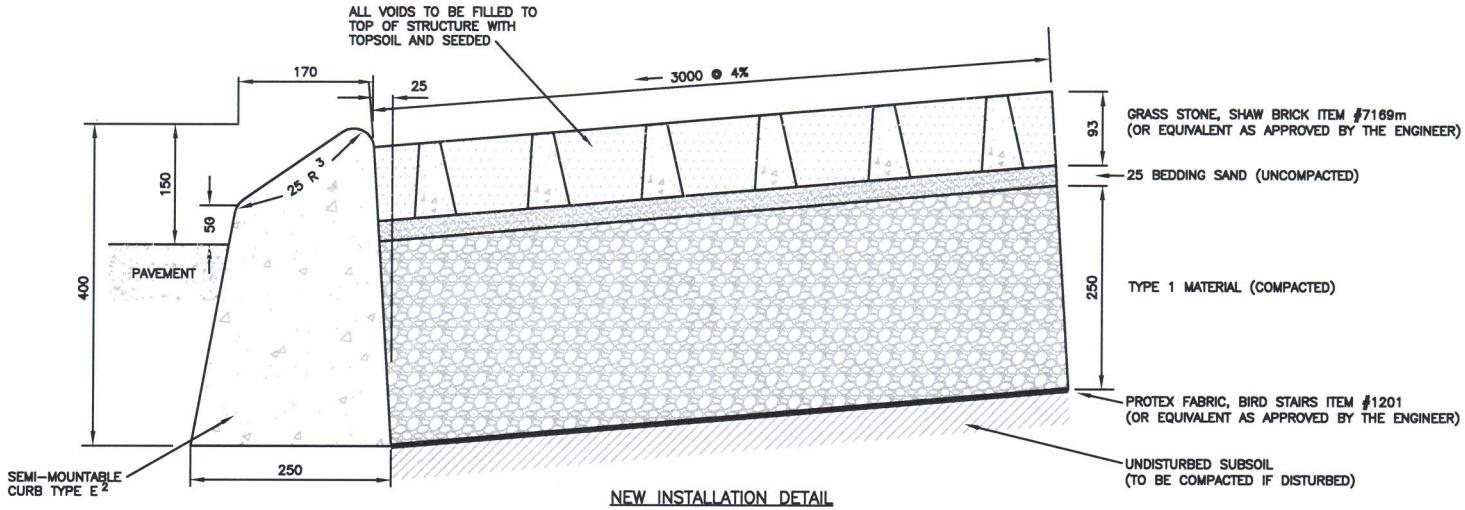

NEW INSTALLATION DETAIL

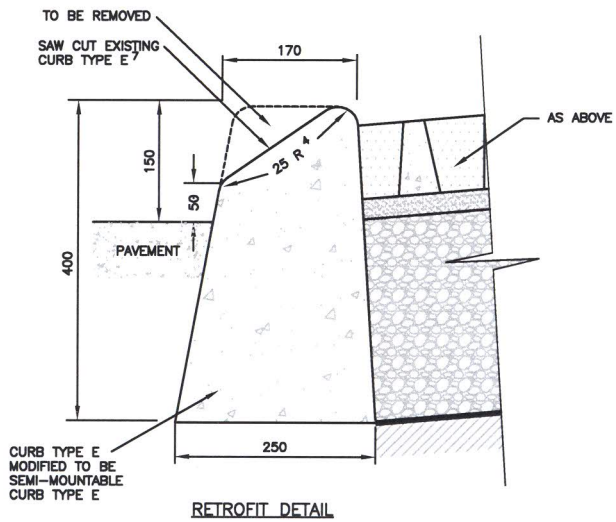

RETROFIT DETAIL

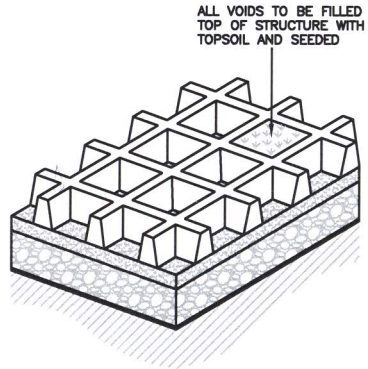

GRASS STONE 5
PERSPECTIVE VIEW

NOTES:
1. ALL CURBS ARE OF PORTLAND CEMENT CONCRETE.
2. SHALL BE BUILT ON AN APPROVED GRANULAR BASE HAVING A DEPTH OF 150mm MIN.
3. EXPOSED EDGES SHALL BE FINISHED WITH A ROUNDING TOOL.
4. EXPOSED EDGES SHALL BE FINISHED WITH A GRINDING TOOL.
5. TO BE INSTALLED AS PER MANUFACTURERS SPECIFICATIONS.
6. ALL DIMENSIONS ARE IN MILLIMETRES UNLESS OTHERWISE NOTED.
7. CLEAR CONCRETE SEALER TO BE APPLIED TO ALL CUT/GROUND SURFACES.

NOVA SCOTIA
Transportation and Infrastructure Renewal

No.	REVISION
1	NOTE 7 ADDED TO PLAN

Scale :	N.T.S.
Drawn by :	G.WRIGHT
Checked by :	K.BODDY
Date of Plan :	MAR2011
File No. :	S-2011-027

Manager Highway Planning and Design

Director Highway Engineering Services

Executive Director Highway Engineering and Construction

TRUCK OVER-RUN FOR ROUNDABOUTS

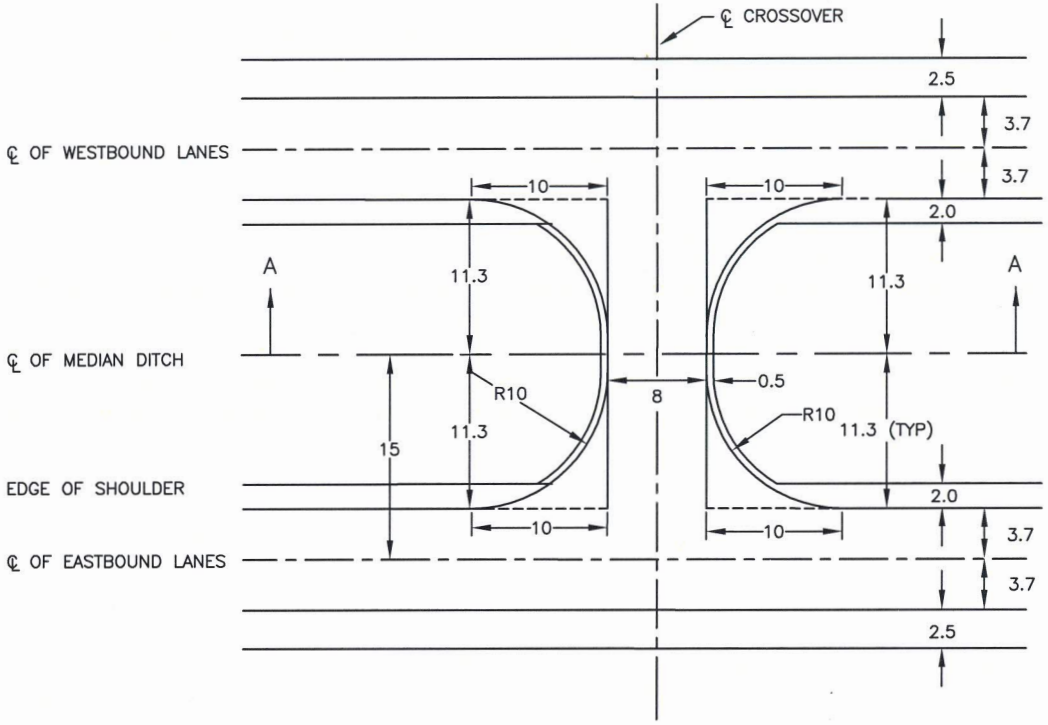

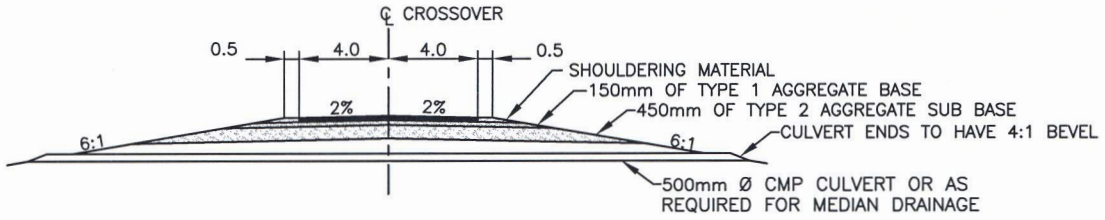

SECTION A–A

NOTES:
1. LANES TO BE PAVED USING 75–150mm THICKNESS. RAC MATERIAL MAY ALSO BE USED.
2. LOCATED AS PER POLICY 1069 MEDIAN CROSSOVERS.
3. LANES TO BE PAVED DURING MAJOR REPAVING PROJECTS ONLY.
4. ALL DIMENSIONS ARE IN METRES UNLESS OTHERWISE NOTED.

Manager Highway Planning and Design

Director Highway Engineering Services

Executive Director Highway Engineering and Construction

NOVA SCOTIA
Transportation and Infrastructure Renewal

No.	REVISION
1	TITLE CHANGED, LANE WIDTH ADJUSTED, JAN. 2017

Scale : N.T.S.
Drawn by : M.LABRECHE
Checked by : K.BODDY
Date of Plan : MAY2011
File No. : S–2011–031

MEDIAN CROSSOVER

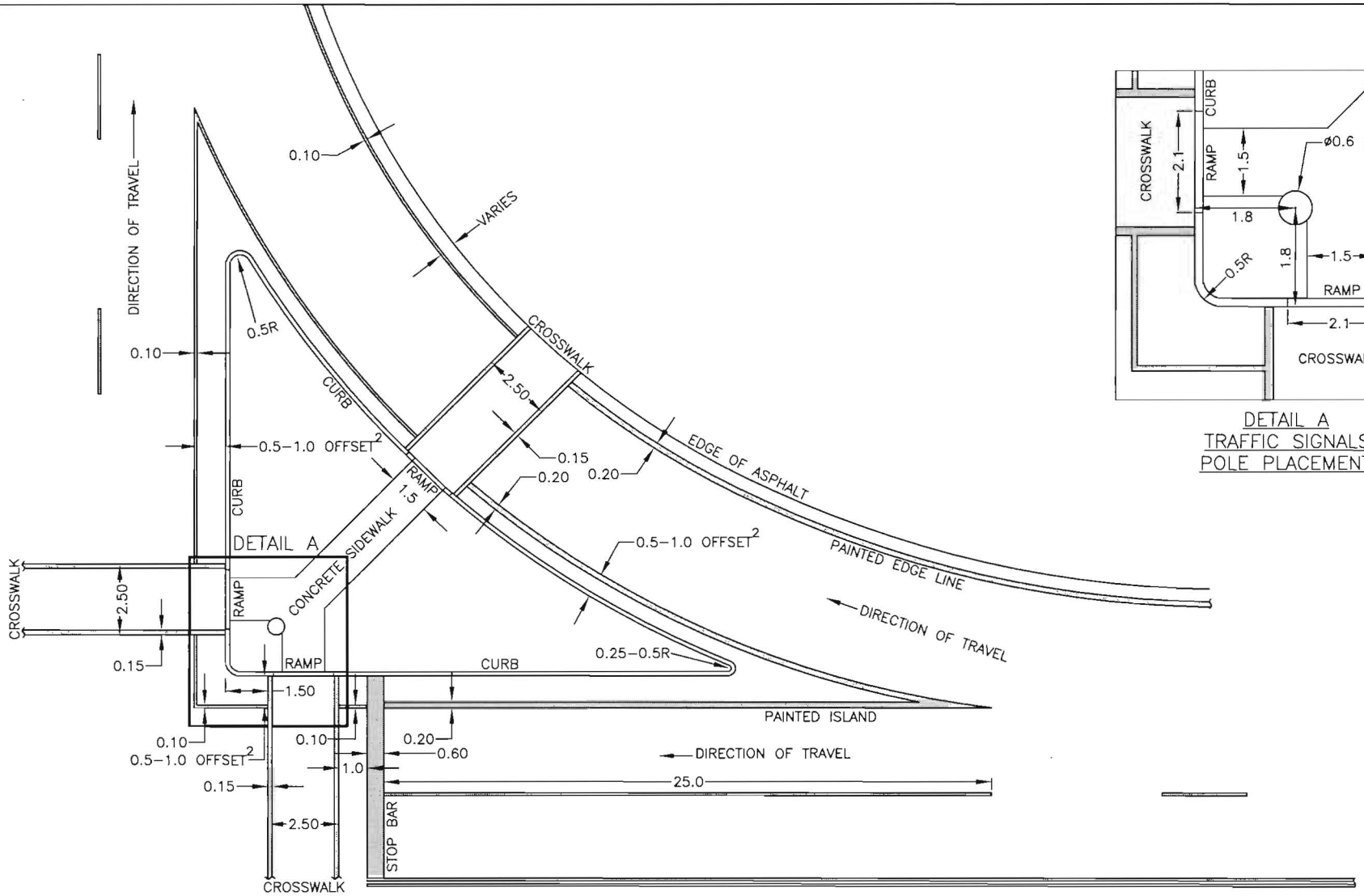

DETAIL A
TRAFFIC SIGNALS
POLE PLACEMENT

NOTES:
1. ALL DIMENSIONS ARE IN METRES UNLESS OTHERWISE NOTED.
2. OFFSET MAY EXCEED 1.0m DEPENDING ON NUMBER OF LANES AND TURNING PATH OF DESIGN VEHICLE.

Manager Traffic Engineering Services

Director Highway Engineering Services

Executive Director Highway Engineering and Construction

NOVA SCOTIA
Transportation and Infrastructure Renewal

No.	REVISION

Scale : N.T.S.
Drawn by : P.HILL/L.MACLEAN
Checked by : P.HILL
Date of Plan : MAY2011
File No. : S-2011-091

CURBED ISLAND DETAIL WITH TRAFFIC SIGNALS

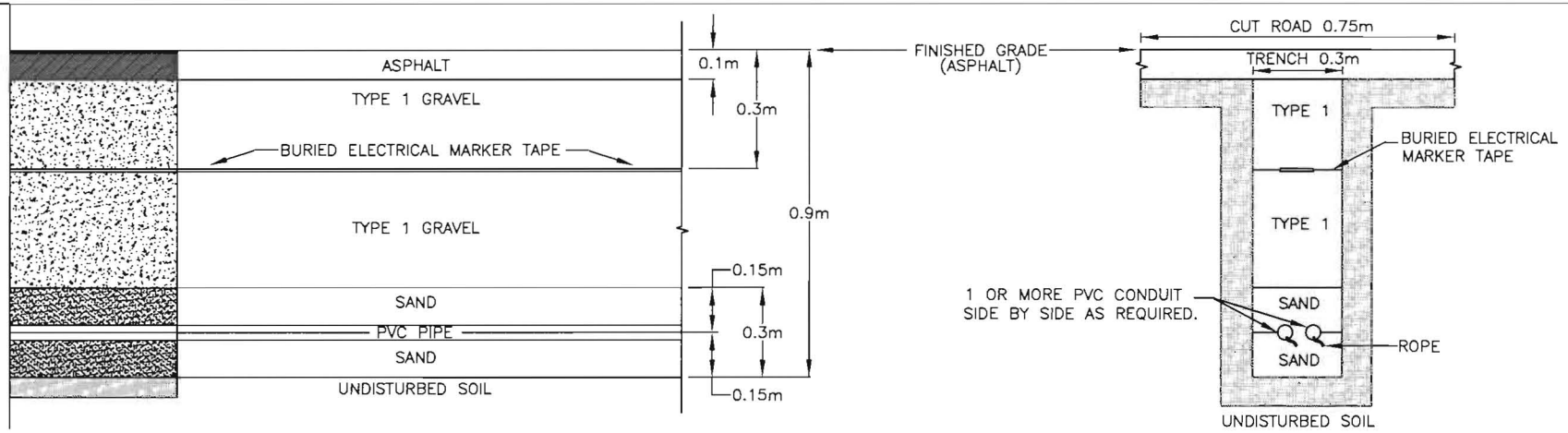

SIDE SECTION

END SECTION

TYPE A

MINIMUM COVER FOR VEHICULAR AREAS

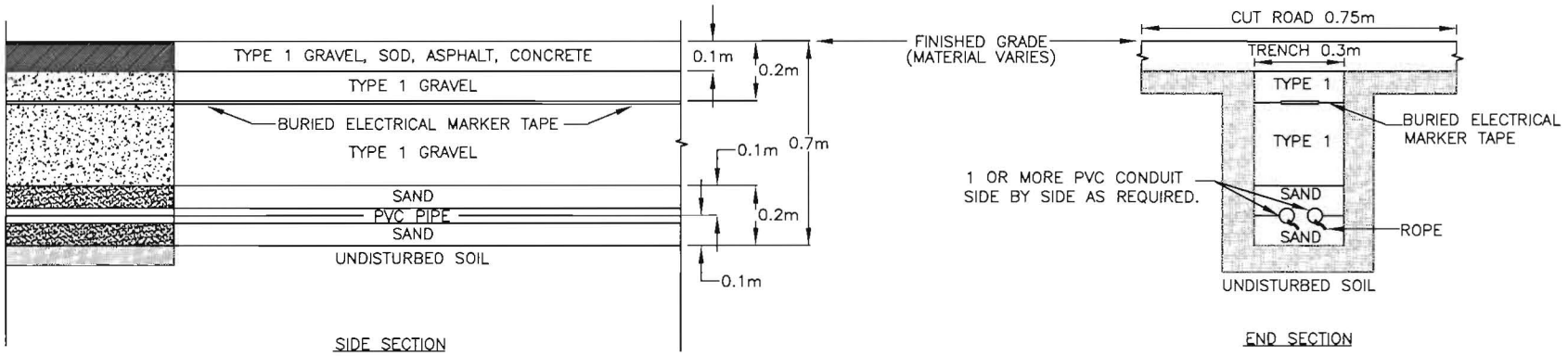

SIDE SECTION

END SECTION

TYPE B

MINIMUM COVER FOR NON-VEHICULAR AREAS

NOTES:

PVC:
1. SCHEDULE 40 TO CSA C22.2 No. 211.2
2. ALL UNUSED RUNS OF PVC TO HAVE 6mm POLY ROPE PULLED THROUGH AND SECURED AT EACH END TO PREVENT PULL BACK.
3. ALL PVC JOINTS MUST BE CLEANED, SANDED, WIPED DRY, etc. AND CEMENTED.

COMPACTION:
1. BACKFILL AS PER DRAWING IN ACCORDANCE WITH ELECTRICAL CODE SECTION 12-012 AND TABLE 53. COMPACTION IS TO BE DONE IN SUCCESSIVE LAYERS AS LAID OUT ABOVE. COMPACTION IS TO BE DONE UNTIL THERE IS NO VISIBLE EVIDENCE OF NO FURTHER CONSOLIDATION (98% PROCTOR DENSITY).

ROPE:
1. 6mm POLYPROPOLENE.
2. EACH PULL OF ROPE IS TO BE A CONTINUOUS LENGTH. DO NO JOIN LENGTHS UNLESS IT IS IN A JUNCTION BOX.
3. SECURE ENDS FROM PULL BACK.

MARKING TAPE:
1. TO BE INSTALLED BELOW 2nd LAYER OF TYPE 1

ASPHALT:
1. REPLACE 100mm OF ASPHALT IN MINIMUM OF TWO LIFTS: 1st COURSE MIX, 2nd FINE MIX WITH 20mm CROWN.

HIGHWAY LIGHTING:
1. 32mm PVC CONDUIT.(TYP)
2. 1-#6 RW90 BLACK CONDUCTOR.(TYP)
   1-#6 RW90 WHITE CONDUCTOR.(TYP)
   1-#10 RW90 GREEN CONDUCTOR.(TYP)

Manager Traffic Engineering Services

Director Highway Engineering Services

Executive Director Highway Engineering and Construction

NOVA SCOTIA
Transportation and Infrastructure Renewal

No.	REVISION

Scale :	N.T.S.
Drawn by :	P.HILL/L.MACLEAN
Checked by :	P.HILL
Date of Plan :	MAY2011
File No. :	S-2011-094

TRENCHING DETAILS FOR ELECTRICAL CONDUIT

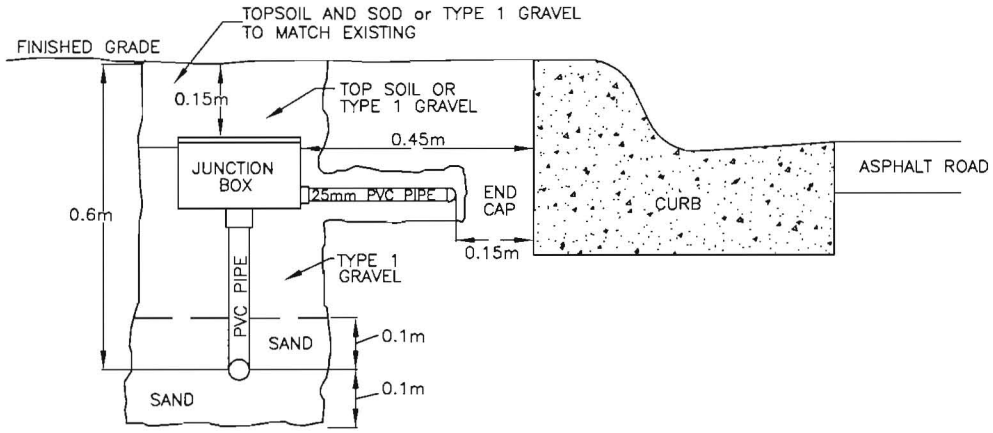

TYPE A
JUNCTION BOX CROSS SECTION – WITH CURB

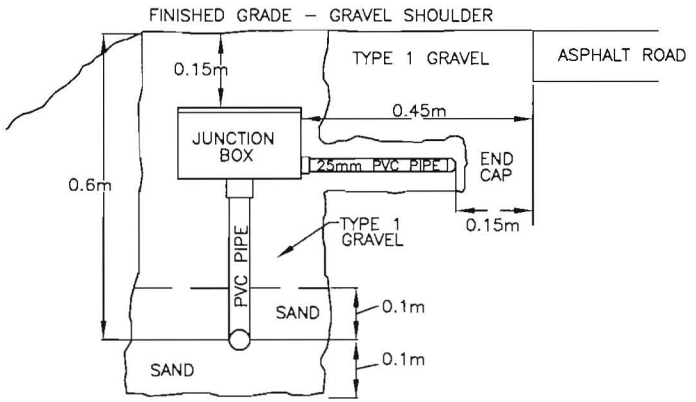

TYPE B
JUNCTION BOX CROSS SECTION – NO CURB

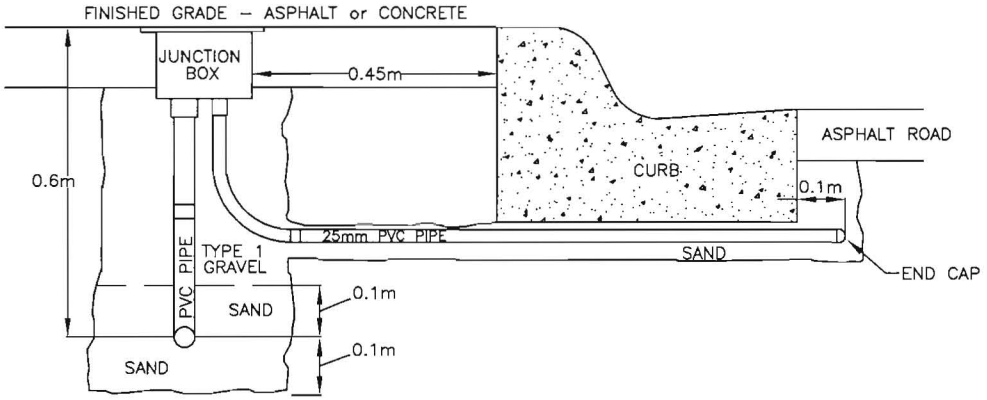

TYPE C
JUNCTION BOX CROSS SECTION – SURFACE MOUNT

NOTES:
1. FOR TYPE A AND B: IPEX BRAND JB884 OR JB887 AS SPECIFIED ON DESIGN PLANS OR APPROVED EQUIVALENT.
2. FOR TYPE C: IPEX BRAND H884 AS SPECIFIED ON DESIGN PLANS OR APPROVED EQUIVALENT.
3. ALL PVC CONDUIT MUST BE SCHEDULE 40 TO CSA C22.2 No. 211.2.
4. REFER TO STANDARD DRAWING S–2011–094 FOR TRENCH DETAILS.

Manager Traffic Engineering Services

Director Highway Engineering Services

Executive Director Highway Engineering and Construction

NOVA SCOTIA
Transportation and Infrastructure Renewal

No.	REVISION

Scale : N.T.S.
Drawn by : P.HILL/L.MACLEAN
Checked by : P.HILL
Date of Plan : MAY2011
File No. : S–2011–095

JUNCTION BOX DETAILS TRAFFIC SIGNALS

POSTED SPEED (km/h)	AADT <1000	PAVED SHOULDER WIDTH (m)				GRAVEL WIDTH (m)	
		AADT 1000–3000		AADT >3000			
		REPAVING [1] (MIN. – DESIRED)	NEW CONSTRUCTION/ RECONSTRUCTION [2] (MIN. – DESIRED)	REPAVING (MIN. – DESIRED)	NEW CONSTRUCTION/ RECONSTRUCTION (MIN. – DESIRED)	REPAVING (MIN. – DESIRED)	NEW CONSTRUCTION/ RECONSTRUCTION
50	NA	1.2 – 1.5	1.5	1.2 – 1.5	1.5	0.3 – 0.5	0.5
60–70	NA	1.2 – 1.8	1.5 – 1.8	1.2 – 1.8	1.8	0.3 – 0.5	0.5
80	NA	1.2 – 1.8	1.8 – 2.0 [3]	1.5 – 1.8	1.8 – 2.0 [3]	0.3 – 0.5	0.5
80+	TO BE DISCUSSED WITH HIGHWAY PLANNING & DESIGN						

NOTES:
1. REPAVING: NO WIDENING OF SUBGRADE IS PLANNED.
2. NEW CONSTRUCTION/RECONSTRUCTION GUIDELINES APPLY TO RECONSTRUCTION OR REPAVING WORK AREAS WHERE THE EXISTING SUBGRADE IS WIDE ENOUGH TO MEET THE NEW CONSTRUCTION SHOULDER STANDARDS, e.g. REMOVING CLIMBING LANES, NARROWING LANE WIDTH.
3. 1.5m PAVED SHOULDER WITH A 0.5m BUFFER.
4. MINIMUM WIDTH MAY BE UNACHIEVABLE DUE TO SUBGRADE CONSTRAINTS. EVERY EFFORT WILL BE MADE TO HAVE THE SHOULDER AS WIDE AS POSSIBLE, WITH AN ABSOLUTE MINIMUM OF 1.0m. IF MINIMUM WIDTHS ARE UNACHIEVABLE, SIGNAGE MAY BE NECESSARY.
5. NO SHOULDER WIDENING IS RECOMMENDED WHEN PAVEMENT PRESERVATION, MAINTENANCE OVERLAYS, ETC. ARE PLANNED.
6. A MINIMUM OF 1.5m IS REQUIRED NEXT TO GUARDRAIL, CURB OR OTHER FIXED OBJECTS. ON SHOULDERS 1.5m OR GREATER, ADD 0.2m TO 0.5m IN AREAS WHERE THERE IS A FIXED OBJECT.

Manager Highway Planning and Design

Director Highway Engineering Services

Executive Director Highway Engineering and Construction

NOVA SCOTIA
Transportation and Infrastructure Renewal

No.	REVISION
3	REVISED SEP. 2018
2	NOTES REVISED JAN. 2014
1	CHANGE TO NOTES 27 JUNE 2013

Scale : N.T.S.
Drawn by : R.SUTCLIFFE
Checked by : E.PUGH
Date of Plan : JUNE2011
File No. : S–2011–200

PAVED SHOULDER WIDTH FOR ACTIVE TRANSPORTATION

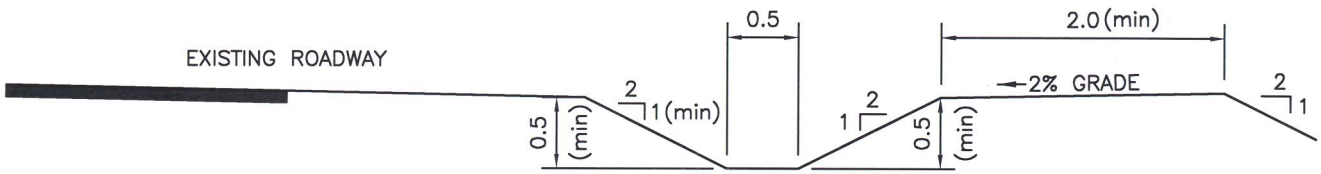

PEDESTRIAN TRAIL WITH DITCH

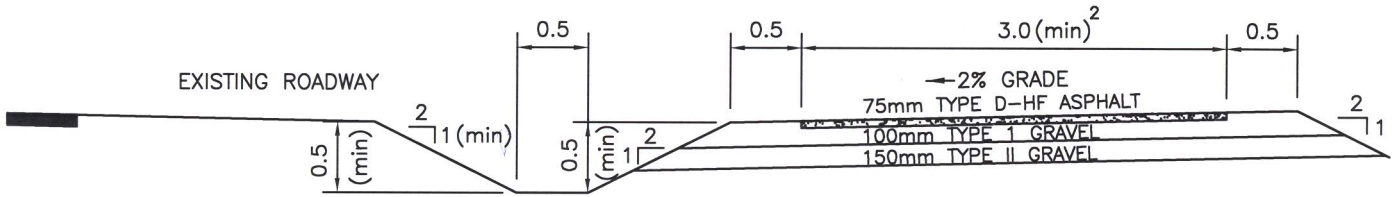

MULTI-USE TRAIL WITH DITCH

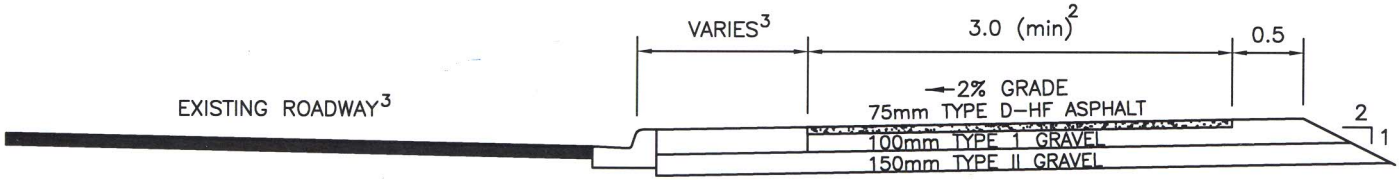

MULTI-USE TRAIL WITH CURB AND GUTTER

NOTES:

1. SURFACE TYPE – GROOMED GRAVEL (min)
2. THIS MAY BE INCREASED BASED ON EXPECTED VOLUME AND TYPE OF USE
3. REFER TO STANDARD DRAWING FOR "SIDEWALK DETAILS" (S-2009-014,HS501) FOR DETAILS
4. MAXIMUM LONGITUDINAL GRADE: 5%
5. ALL DIMENSIONS ARE IN METRES UNLESS OTHERWISE NOTED.

NOVA SCOTIA
Transportation and Infrastructure Renewal

No.	REVISION
2	Materials Depth Added 13 DEC 2011
1	Note 3 Added 19 July 2011

Scale :	N.T.S.
Drawn by :	C.DOYLE
Checked by :	E.PUGH
Date of Plan :	AUG2010
File No. :	S-2011-201

Manager Highway Planning and Design

Director Highway Engineering Services

Executive Director Engineering and Construction

WALKING AND NON MOTORIZED MULTI-USE TRAIL TREATMENTS

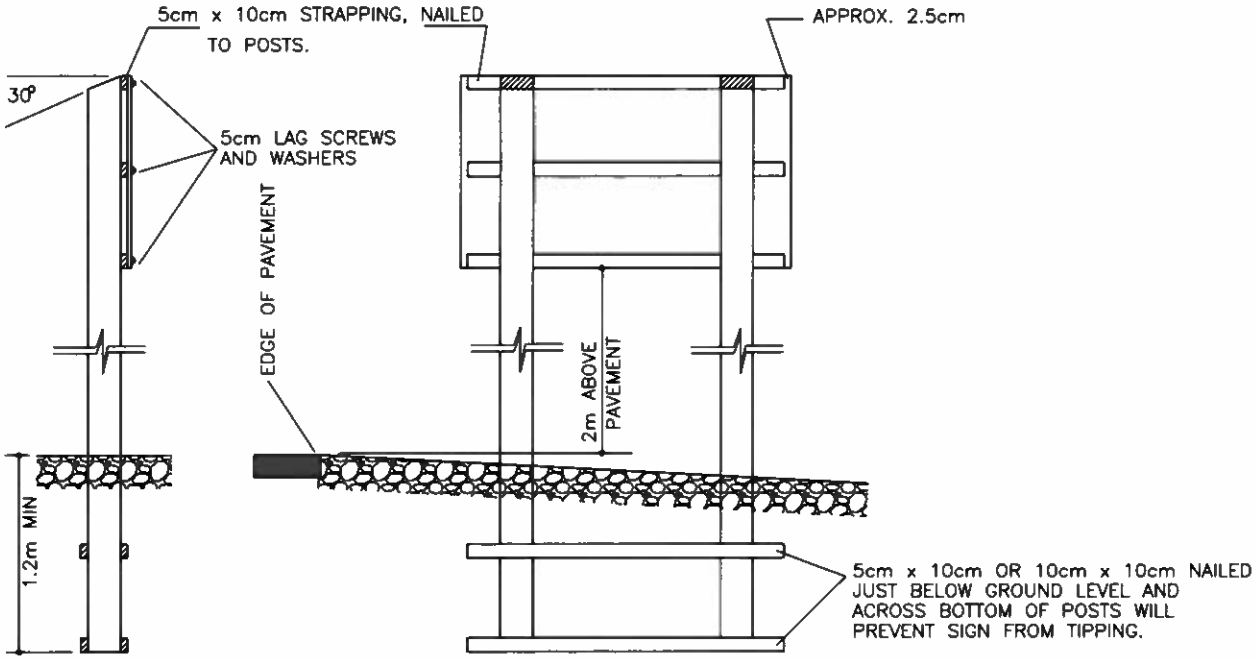

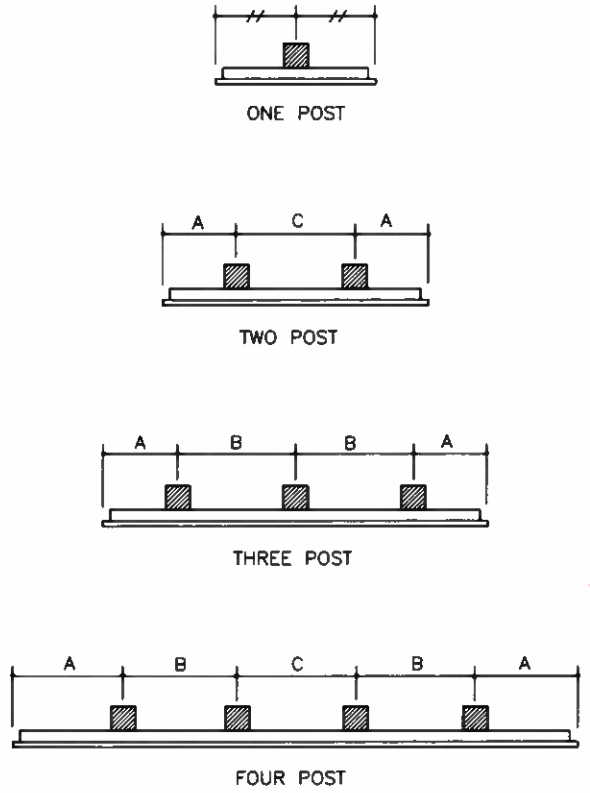

POST SPACING DIAGRAMS
(NOT TO SCALE)

SEE STANDARD PLAN S-2011-303 FOR POST SPACING

NOTES:
1. STRAPPING BEHIND SIGN ARE TO BE PAINTED THE SAME COLOUR AS THE SIGN.
2. SIGN POSTS TO BE PAINTED WHITE UNLESS PRESSURE TREATED.
3. SIGN SIZE SHOWN ON POST CHART ARE HEIGHT x LENGTH.
4. SEE CHART FOR NUMBER, SIZE AND SPACING OF POSTS.
5. SIGNS TO BE INSTALLED ON BACK SLOPE WHENEVER POSSIBLE.
6. FOR LARGER SIGNS USE MAXIMUM END SPACE OF 45cm AND MAXIMUM POST SPACING OF 120cm WITH 15cm x 15cm POSTS.
7. SEE STANDARD PLAN S-2011-101 FOR POST SPACING.
8. FOR SIGN OFFSET FROM THE LANE LINE, CONTACT THE DISTRICT TRAFFIC SUPERVISOR OR THE PROVINCIAL SIGNING OFFICER.

Manager Traffic Engineering Services

Director Highway Engineering Services

Executive Director Highway Engineering and Construction

NOVA SCOTIA
Transportation and Infrastructure Renewal

No.	REVISION
1	PLAN NUMBER CHANGED FEB. 2019

Scale : N.T.S.
Drawn by : B.STORRIE
Checked by : P.HILL
Date of Plan : MAY2011
File No. : S-2011-302

WOOD SIGN STRUCTURE ASSEMBLY DETAILS

Sign Size	# of Posts	Post Size	Post Spacing		
			A	B	C
60 x 30 cm	1	10 x 10 cm	30 cm		
90 x 30 cm	1	10 x 10 cm	45 cm		
60 x 45 cm	1	10 x 10 cm	30 cm		
90 x 45 cm	1	10 x 10 cm	45 cm		
60 x 60 cm	1	10 x 10 cm	30 cm		
90 x 60 cm	1	10 x 10 cm	45 cm		
75 x 75 cm	1	10 x 10 cm	40 cm		
90 x 75 cm	1	10 x 10 cm	45 cm		
90 x 90 cm	1	10 x 10 cm	45 cm		
120 x 30 cm	2	10 x 10 cm	15 cm		90 cm
150 x 30 cm	2	10 x 10 cm	30 cm		90 cm
180 x 30 cm	2	10 x 10 cm	30 cm		120 cm
215 x 30 cm	2	10 x 10 cm	45 cm		120 cm
120 x 45 cm	2	10 x 10 cm	15 cm		90 cm
150 x 45 cm	2	10 x 10 cm	30 cm		90 cm
180 x 45 cm	2	10 x 10 cm	30 cm		120 cm
215 x 45 cm	2	10 x 10 cm	45 cm		120 cm
120 x 60 cm	2	10 x 10 cm	15 cm		90 cm
150 x 60 cm	2	10 x 10 cm	30 cm		90 cm
180 x 60 cm	2	10 x 10 cm	30 cm		120 cm
215 x 60 cm	2	10 x 10 cm	45 cm		120 cm
120 x 75 cm	2	10 x 10 cm	15 cm		90 cm
150 x 75 cm	2	10 x 10 cm	30 cm		90 cm
180 x 75 cm	2	10 x 10 cm	30 cm		120 cm
215 x 75 cm	2	10 x 10 cm	45 cm		120 cm
120 x 90 cm	2	10 x 10 cm	15 cm		90 cm
150 x 90 cm	2	10 x 10 cm	30 cm		90 cm

Sign Size	# of Posts	Post Size	Post Spacing		
			A	B	C
180 x 90 cm	2	10 x 10 cm	30 cm		120 cm
215 x 90 cm	2	10 x 10 cm	45 cm		120 cm
120 x 120 cm	2	10 x 10 cm	15 cm		90 cm
150 x 120 cm	2	10 x 10 cm	30 cm		90 cm
180 x 120 cm	2	10 x 10 cm	30 cm		120 cm
215 x 120 cm	2	10 x 10 cm	45 cm		120 cm
245 x 30 cm	3	10 x 10 cm	30 cm	90 cm	
245 x 45 cm	3	10 x 10 cm	30 cm	90 cm	
245 x 60 cm	3	10 x 10 cm	30 cm	90 cm	
245 x 75 cm	3	10 x 10 cm	30 cm	90 cm	
245 x 90 cm	3	10 x 10 cm	30 cm	90 cm	
275 x 90 cm	3	10 x 10 cm	45 cm	90 cm	
305 x 90 cm	3	15 x 15 cm	30 cm	120 cm	
335 x 90 cm	3	15 x 15 cm	45 cm	120 cm	
365 x 90 cm	3	15 x 15 cm	45 cm	135 cm	
245 x 120 cm	3	15 x 15 cm	30 cm	90 cm	
275 x 120 cm	3	15 x 15 cm	45 cm	90 cm	
305 x 120 cm	3	15 x 15 cm	30 cm	120 cm	
335 x 120 cm	3	15 x 15 cm	45 cm	120 cm	
365 x 120 cm	3	15 x 15 cm	45 cm	135 cm	
395 x 90 cm	4	15 x 15 cm	40 cm	105 cm	105 cm
425 x 90 cm	4	15 x 15 cm	40 cm	115 cm	115 cm
395 x 120 cm	4	15 x 15 cm	40 cm	105 cm	105 cm
425 x 120 cm	4	15 x 15 cm	40 cm	115 cm	115 cm
455 x 120 cm	4	15 x 15 cm	40 cm	125 cm	125 cm
485 x 120 cm	4	15 x 15 cm	40 cm	135 cm	135 cm

NOTES:

Manager Traffic Engineering Services

Director Highway Engineering Services

Executive Director Highway Engineering and Construction

NOVA SCOTIA
Transportation and Infrastructure Renewal

No.	REVISION
1	PLAN NUMBER CHANGED FEB. 2019

Scale : N.T.S.
Drawn by : J.MACINTOSH/B.STORRIE
Checked by : P.HILL
Date of Plan : MAY2011
File No. : S-2011-303

WOOD SIGN STRUCTURE POST SPACING CHART

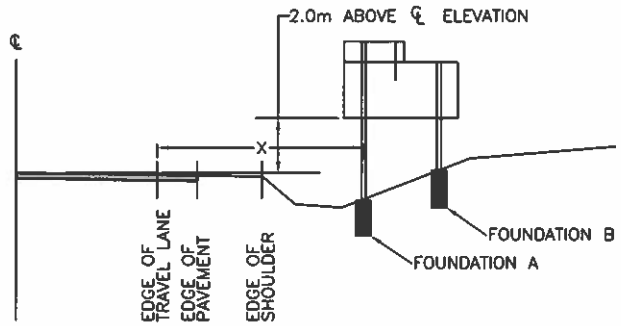

TYPICAL CROSS SECTION

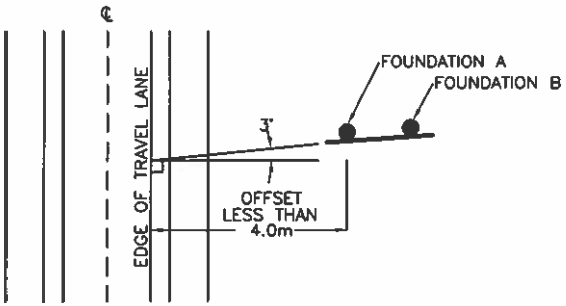

SCENARIO A [1]

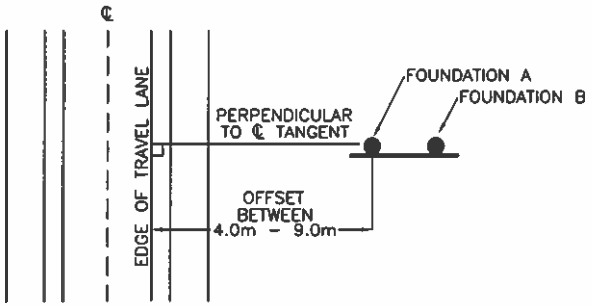

SCENARIO B

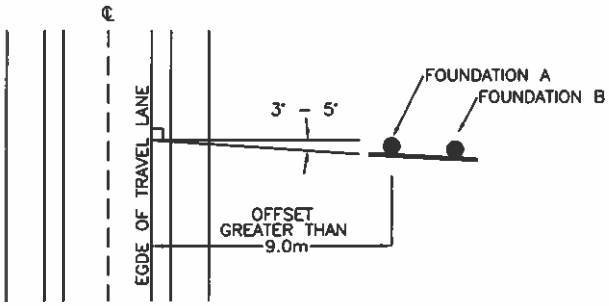

SCENARIO C [2]

METHOD FOR LOCATING FOUNDATIONS
ALUMINUM ROADSIDE SIGNS

NOTES:
1. SIGN IS ORIENTATED AWAY FROM DRIVER'S EYES TO REDUCE GLARE. CONSIDERATION OF LEGIBILITY TO BE CONSIDERED ON HORIZONTAL CURVES.
2. SIGN IS ORIENTATED TOWARDS THE DRIVER'S EYE TO IMPROVE VISIBILITY.

Manager, Traffic Engineering Services

Director Highway Engineering Services

Executive Director Highway Engineering and Construction

NOVA SCOTIA
Transportation and Infrastructure Renewal

No.	REVISION
1	PLAN NUMBER CHANGED FEB. 2019

Scale : N.T.S.
Drawn by : G.WRIGHT
Checked by : P.HILL
Date of Plan : MAY2011
File No. : S-2011-304

ALUMINUM SIGN STRUCTURE ALIGNMENT DETAILS

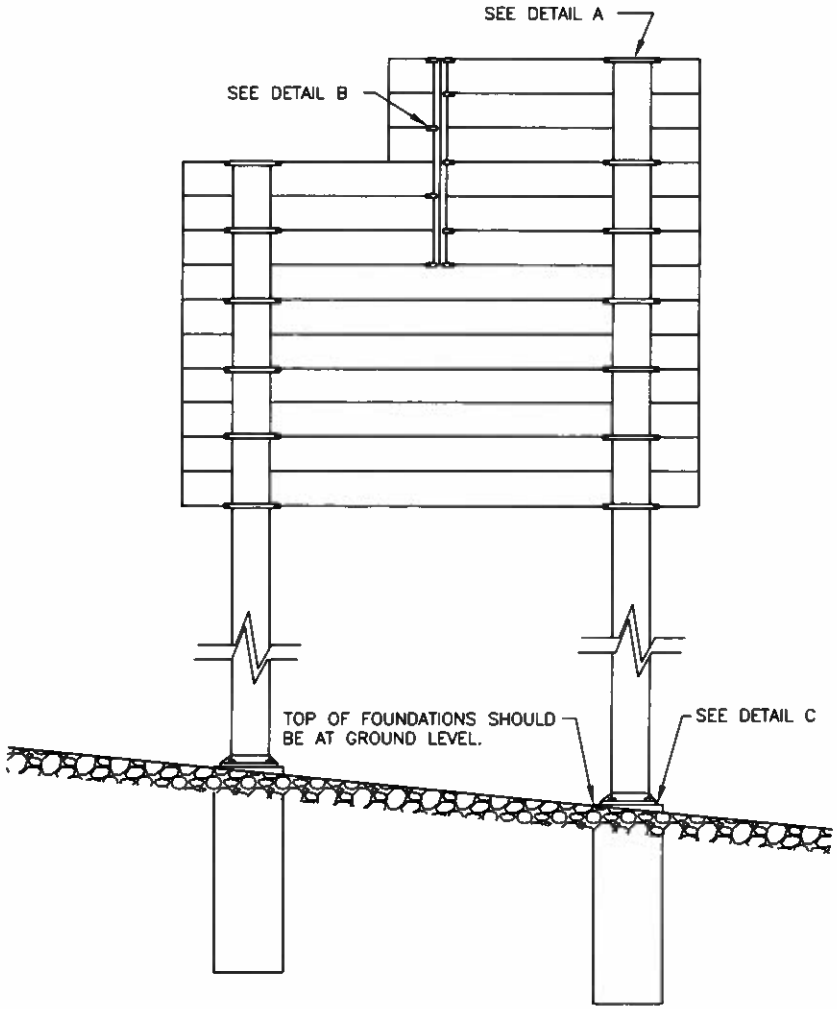

REAR VIEW OF SIGN
SHOWING T–BAR AND
POST CLAMP PLACEMENTS

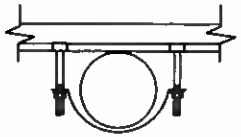

DETAIL A

CAUTION: DO NOT OVERTIGHTEN
OR BEND CLAMPS AND BOLTS.



DETAIL B
T–BAR CLIP



DETAIL C

ALUMINUM OR GALVANIZED SHIMS
FOR LEVELING THE POSTS.
APPROX. 4mm THICK.
THESE SHIMS ARE AVAILABLE FROM
THE CENTRAL SIGN SHOP.

NOTES:
1. ALL NECESSARY HARDWARE WILL BE SENT WITH THE SIGNS FROM THE CENTRAL SIGN SHOP FOR THE ASSEMBLY AND ERECTION OF THE SIGN.
2. CLAMPS EVERY SECOND PANEL PER POST INCLUDING TOP AND BOTTOM OF SIGN.
3. T–BAR CLIPS ALTERNATING AT EACH PANEL INCLUDING DOUBLE AT TOP AND BOTTOM OF T–BAR.

Manager, Traffic Engineering Services

Director Highway Engineering Services

Executive Director Highway Engineering and Construction

NOVA SCOTIA
Transportation and Infrastructure Renewal

No.	REVISION
1	PLAN NUMBER CHANGED FEB. 2019

Scale :	N.T.S.
Drawn by :	J.MACINTOSH/B.STORRIE
Checked by :	P.HILL
Date of Plan :	MAY2011
File No. :	S–2011–305

ALUMINUM SIGN STRUCTURE PANEL ASSEMBLY DETAILS

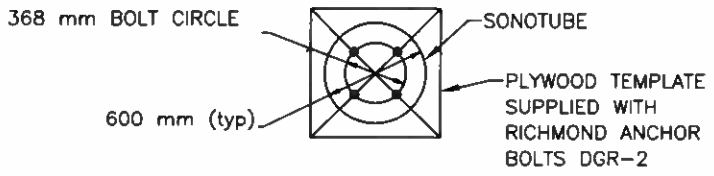

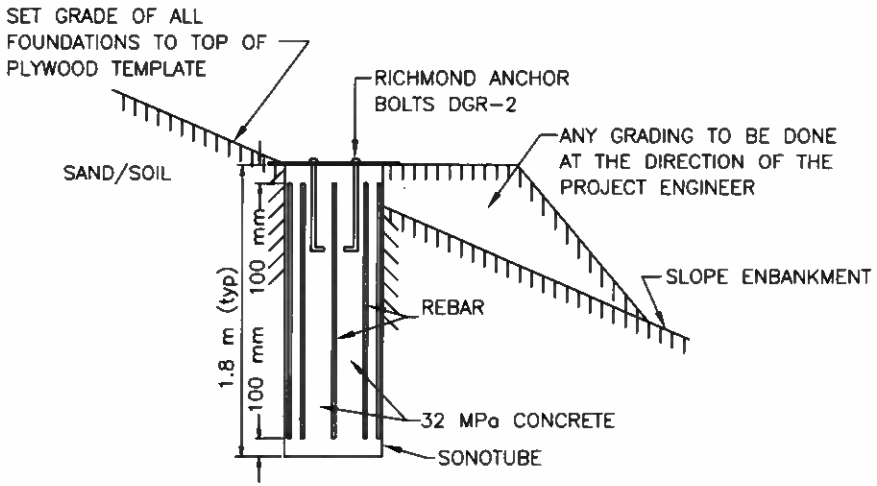

CONCRETE SIGN BASE
SAND/SOIL CONDITIONS

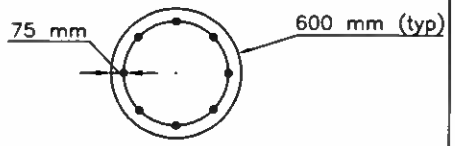

REBAR 8-20M 1.83m LONG
HORIZONTAL REINFORCING TIES
1-10M AT 300 C-C

REBAR LAYOUT DETAIL

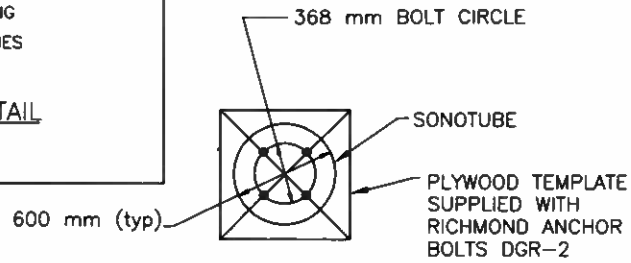

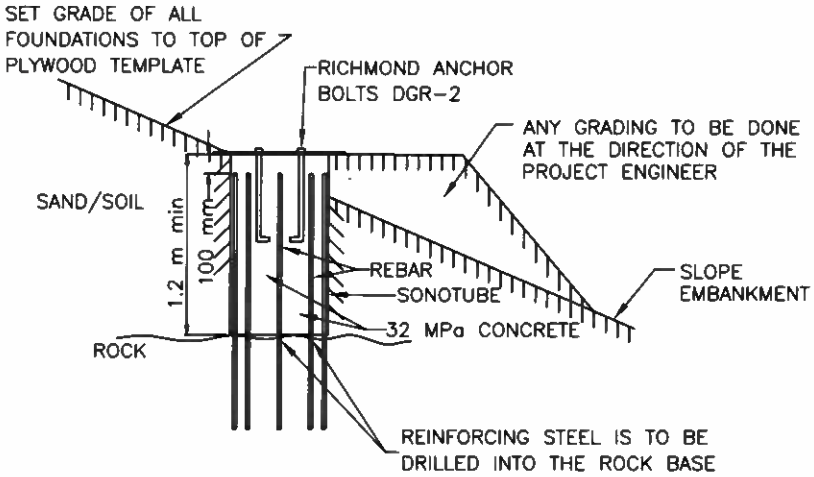

CONCRETE SIGN BASE
ROCK CONDITIONS

NOTES:
1. REINFORCING STEEL IS TO BE 200mm SHORTER THAN HEIGHT OF THE FOUNDATION.

Manager Traffic Engineering Services

Director Highway Engineering Services

Executive Director Highway Engineering and Construction

NOVA SCOTIA
Transportation and Infrastructure Renewal

No.	REVISION
1	PLAN NUMBER CHANGED FEB. 2019

Scale :	N.T.S.
Drawn by :	J.MACINTOSH/B.STORRIE
Checked by :	P.HILL
Date of Plan :	MAY2011
File No. :	S-2011-306

ALUMINUM SIGN STRUCTURE FOUNDATION DETAILS

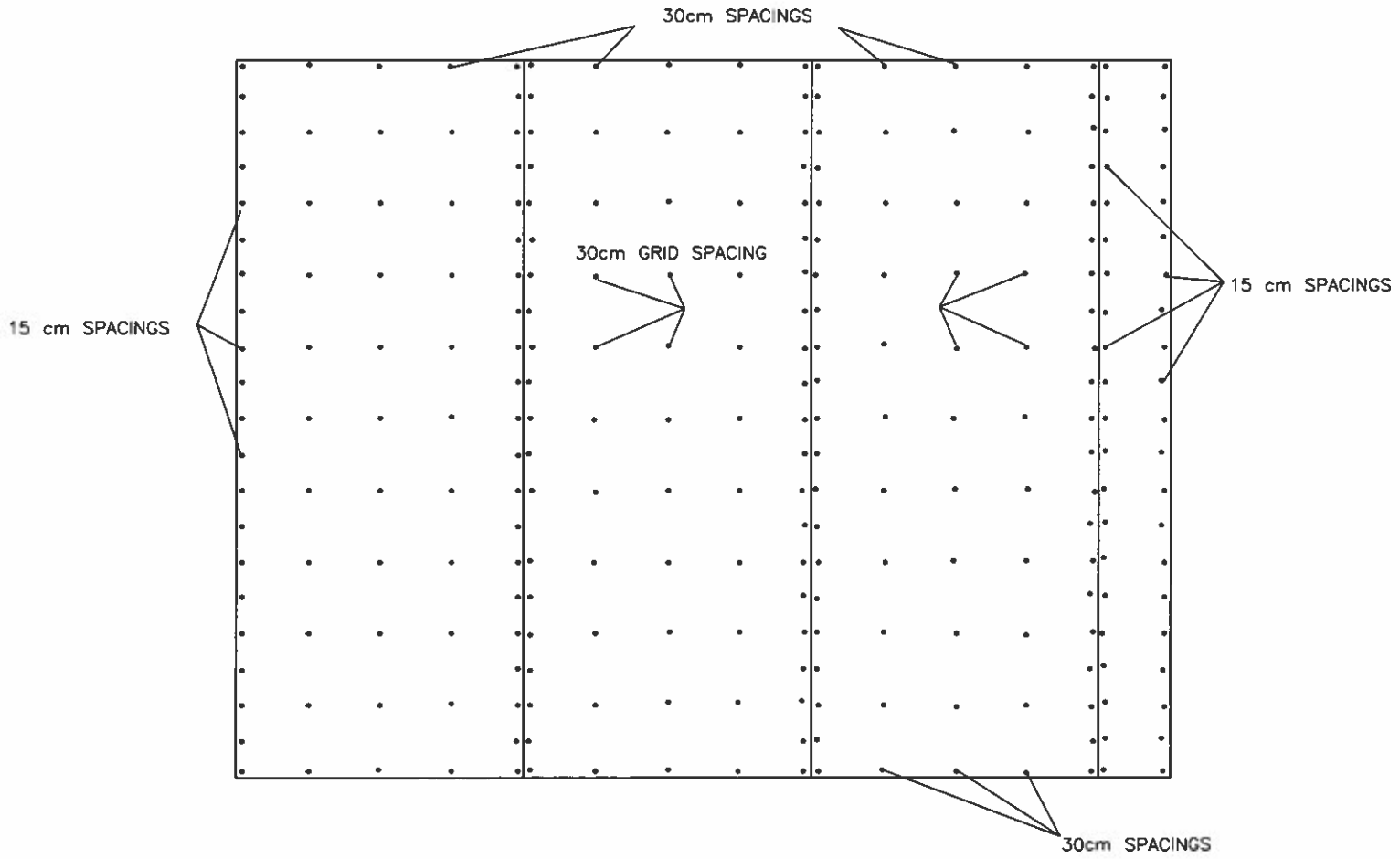

NOTES:
SCREW PLACEMENTS:
1. ALL VERTICAL JOINTS, SCREWS SHALL BE SPACED EVERY 15cm.
2. ALL HORIZONTAL JOINTS, SCREWS SHALL BE SPACED EVERY 30cm.
3. SCREWS SHALL BE PLACED IN A 30cm GRID THROUGH EACH PANEL.

Manager, Traffic Engineering Services

Director Highway Engineering Services

Executive Director Highway Engineering and Construction

NOVA SCOTIA
Transportation and Infrastructure Renewal

No.	REVISION
1	PLAN NUMBER CHANGED FEB. 2019

Scale :	N.T.S.
Drawn by :	J.MACINTOSH/B.STORRIE
Checked by :	P.HILL
Date of Plan :	MAY2011
File No. :	S-2011-307

ALUMINUM SIGN STRUCTURE OVERLAY SCREW SPACING

S-2013-300

HIGHWAY PAVEMENT MARKINGS — PATTERN OF LINES

PATTERNS OF LONGITUDINAL LINES

NAME OF LINE	DIMENSIONS (m)	USE
SOLID		• EDGELINES (WHITE OR YELLOW) • DIRECTIONAL DIVIDING LINES (YELLOW) • LANE LINES PROHIBITING LANE CHANGES (WHITE)
BROKEN	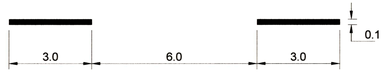	• DIRECTIONAL DIVIDING LINES (YELLOW) • LANE LINES (WHITE)
SIMULTANEOUS SOLID AND BROKEN	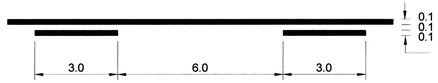	• DIRECTIONAL DIVIDING LINES (YELLOW) • TWO-WAY LEFT TURN LANES (YELLOW)
DOUBLE SOLID		• DIRECTIONAL DIVIDING LINES (YELLOW)
WIDE SOLID		• EDGELINES AT GORE AREAS OF 100 SERIES HIGHWAYS AND IN OTHER CRITICAL AREAS (WHITE ON RIGHT, YELLOW ON THE LEFT)
DASHED 0.5m		• GUIDING LINES (E.G. INTERSECTION MOVEMENTS) (YELLOW OR WHITE BASED ON THE COLOUR OF LINE BEING EXTENDED)
DASHED 1.8m	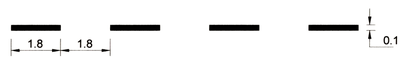	• LANE LINES IN ROUNDABOUTS (WHITE)
DASHED 3.0m	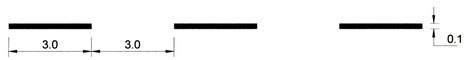	• CONTINUITY LINES IN MERGING AND DIVERGING AREAS (WHITE) • LANE LINES FOR LEFT TURN AND RIGHT TURN BAYS AND TAPERS (WHITE)
WIDE DASHED 3.0m		• CONTINUITY LINES IN MERGING AND DIVERGING AREAS ON 100 SERIES HIGHWAYS (WHITE)

PATTERNS OF TRANSVERSE LINES

NAME OF LINE	DIMENSIONS (m)	USE
STOP		• INTERSECTION STOP LINES (WHITE)
DOUBLE STOP BAR	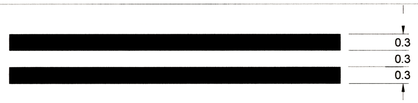	• RAILWAY CROSSINGS (WHITE) (OPTIONAL SEE S-2013-312 FOR CONDITIONS)
PARALLEL CROSSWALK	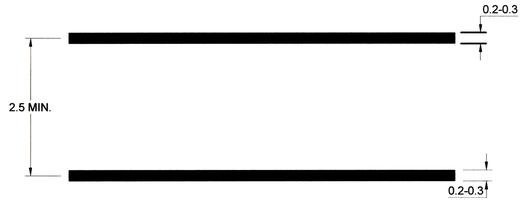	• PEDESTRIAN CROSSWALKS (WHITE)
ZEBRA CROSSWALK	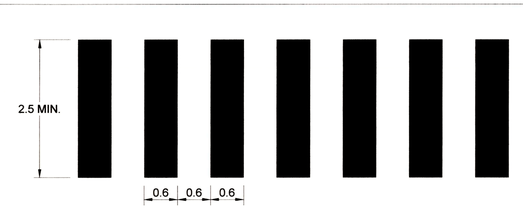	• SCHOOL CROSSWALKS (WHITE) • MID-BLOCK CROSSWALKS (WHITE) MUST BE APPLIED USING HIGH FRICTION MATERIAL
ROUNDABOUT YIELD BAR 0.6 m		• ROUNDABOUT YIELD BAR FOR SINGLE LANE ENTRY (WHITE)
ROUNDABOUT YIELD BAR 1.8 m		• ROUNDABOUT YIELD BAR FOR MULTI-LANE ENTRY (WHITE)

(ADAPTED FROM MUTCDC FIGURE C1-1)

Designed by:		Manager Traffic Engineering and Road Safety	DEC 9, 2014 Date	
Surveyed by:				
Drawn by: R. Hird		Director, Highway Engineering Services	DEC 9, 2014 Date	
Checked by: P. Hill				
Approved by:				

MK.	DATE	REVISION
1	Nov 10, 2014	Added Zebra Crosswalk Markings

NOVA SCOTIA
Transportation and Infrastructure Renewal

Scale:	NTS
Date:	Dec 2013
File No. :	S-2013-300
Sheet No. :	1 of 1

HIGHWAY PAVEMENT MARKINGS

PATTERNS OF LINES

S-2013-301

DIRECTIONAL ARROW SYMBOLS

HIGHWAY PAVEMENT MARKINGS

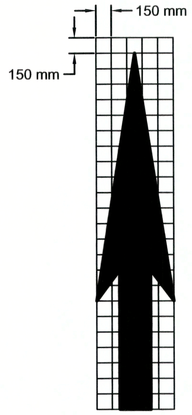

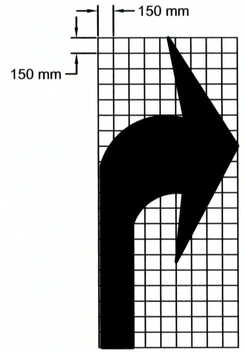

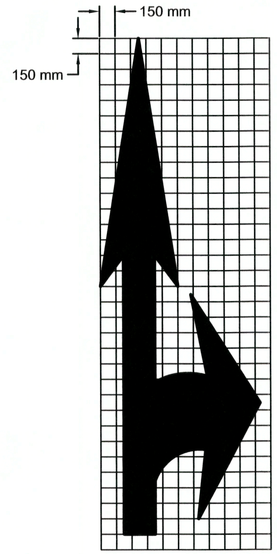

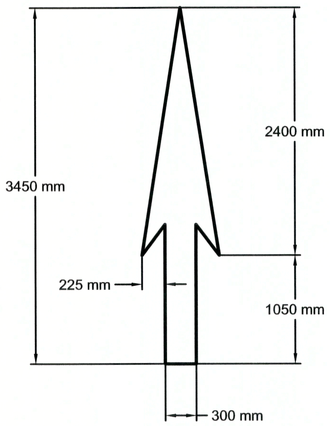

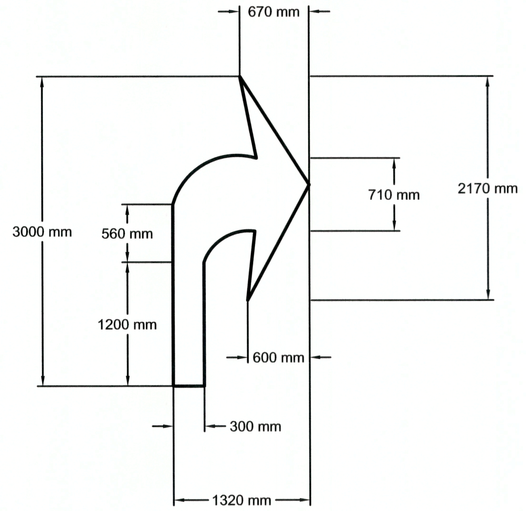

NOTES

1. Dimensions are measured from MUTCDC Figure C1-3
2. Arrows shown as they are to be placed on the pavement. Arrows will appear compressed to the driver. See MUTCDC Figure C1-3 for details.
3. On urban streets, the Area manager may approve the placement of directional arrow symbols that are 75% of the size shown above.

Designed by:		Manager Traffic Engineering Services	Dec 13/13 Date		
Surveyed by:					
Drawn by: R. Hird		Director, Highway Engineering Services	13 Dec/13 Date		
Checked by:					
Approved by:				MK.	DATE

REVISION

NOVA SCOTIA
Transportation and Infrastructure Renewal

Scale:	NTS
Date:	Dec 2013
File No. :	S-2013-301
Sheet No. :	1 of 1

HIGHWAY PAVEMENT MARKINGS

DIRECTIONAL ARROW SYMBOLS

S-2013-308

TYPICAL CENTRE LINE MARKING

HIGHWAY PAVEMENT MARKINGS

NOTES

1. Use posted speed limit or 85th percentile speed whichever is higher.
2. Sight distance is based on a measurement from an eye height of 115 cm to an object height of 115 cm.
3. Mark a no-passing zone when the sight distance for the speed on the curve (measured in the field) is less than minimum sight distance listed in this Table 1.
4. Also see S-2013-312 Highway Signage and Pavement Markings - Railway Crossings

TABLE 1
NO-PASSING ZONE REQUIREMENT FOR VERTICAL OR HORIZONTAL CURVES

SPEED LIMIT (km/h) SEE NOTE 1	MINIMUM SIGHT DISTANCE (m) SEE NOTES 2 AND 3
50	160
60	200
70	240
80	275
90	330
100	400
110	475
120	565

TABLE 2
SOLID LINE LENGTH ON APPROACHES TO INTERSECTIONS AND RAILWAY CROSSINGS

SPEED LIMIT (km/h) SEE NOTE 1	SOLID LINE LENGTH (m)
50	80
60	100
70	120
80	140
90	165
100	200
110	240
120	285

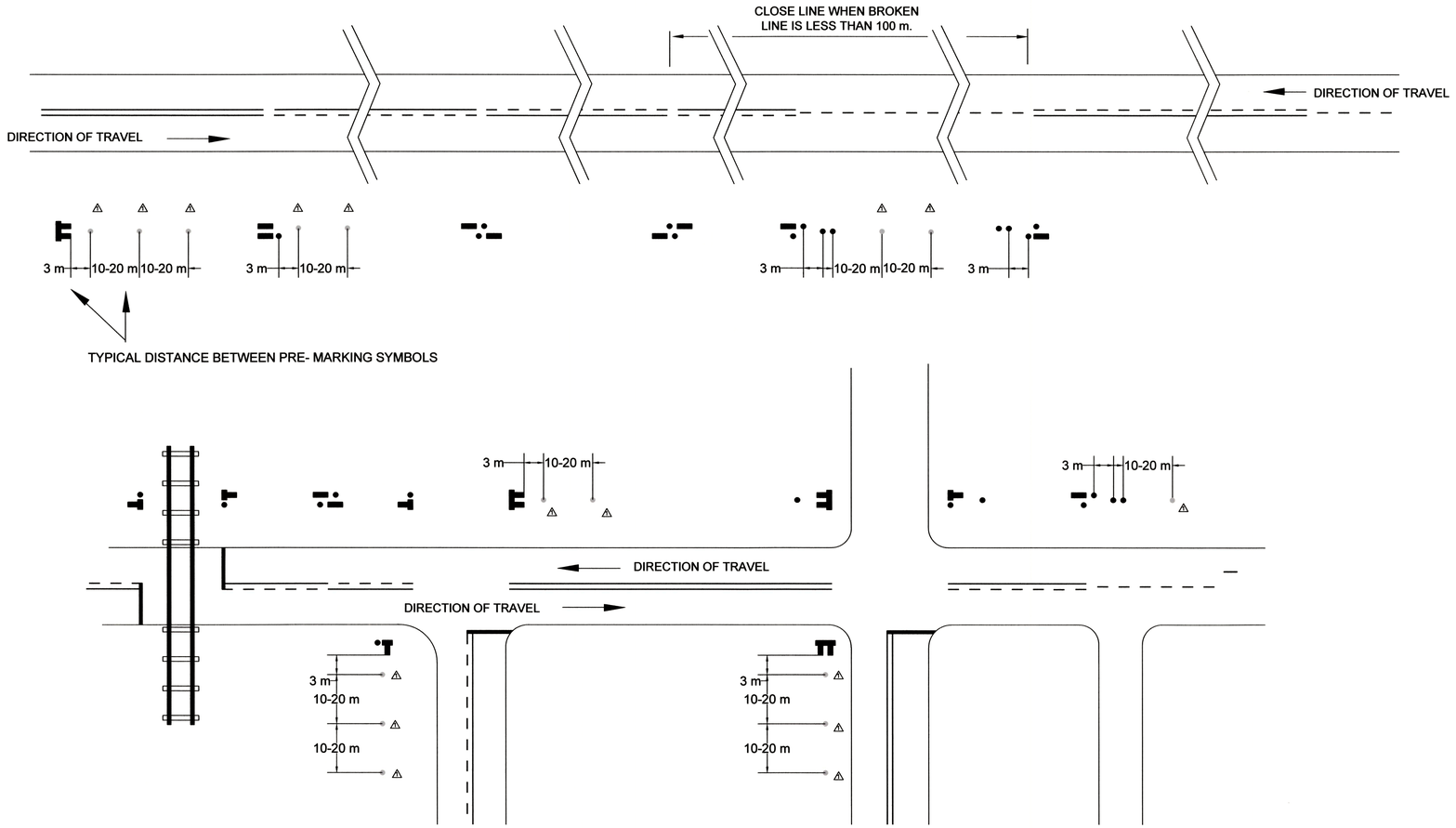

TYPICAL PRE-MARKING SCENARIOS

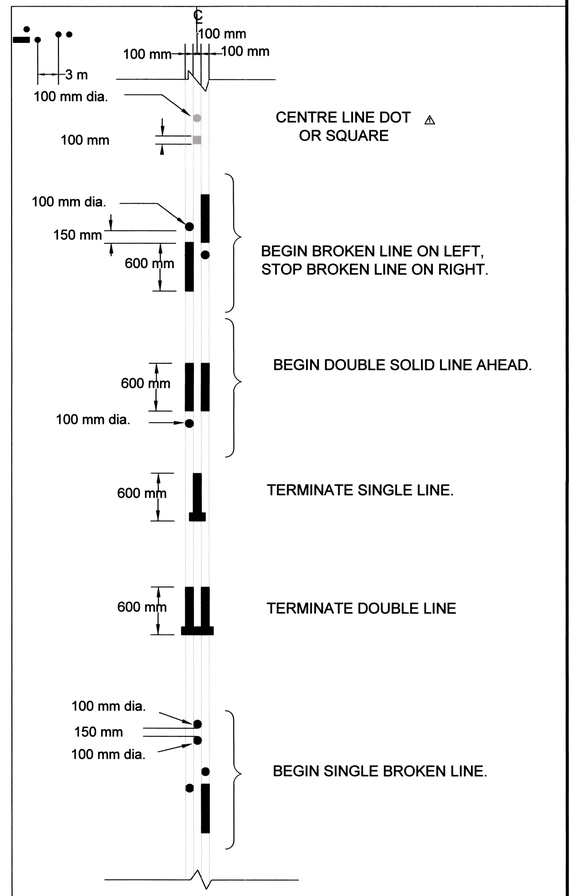

LEGEND FOR PRE-MARKING SYMBOLS

Designed by:		Manager Traffic Engineering Services	Apr 9/14 Date		
Surveyed by:					
Drawn by: R.Hird		Director, Highway Engineering Services	9/Apr/14 Date		
Checked by:					
Approved by:				1 April 2014	Centreline dot colour changed, Notes and tables added.
				MK. DATE	REVISION

NOVA SCOTIA
Transportation and Infrastructure Renewal

Scale:	NTS
Date:	Dec. 2013
File No. :	S-2013-308
Sheet No. :	1 of 1

HIGHWAY PAVEMENT MARKINGS

PRE-MARKING

S-2013-309

HIGHWAY PAVEMENT MARKINGS ACCELERATION / DECELERATION LANES ON 100 SERIES HIGHWAYS

PARALLEL ACCEL-DECEL LANE MARKINGS

PARALLEL DECEL LANE

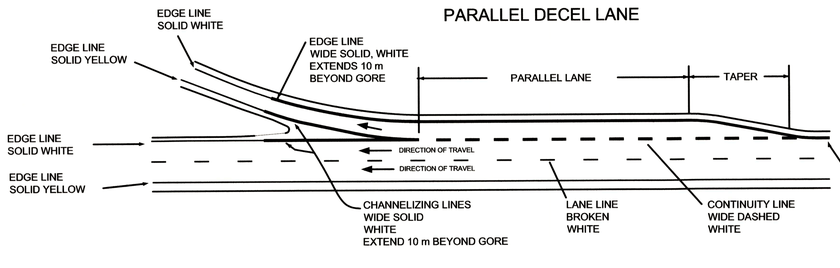

PARALLEL ACCEL LANE

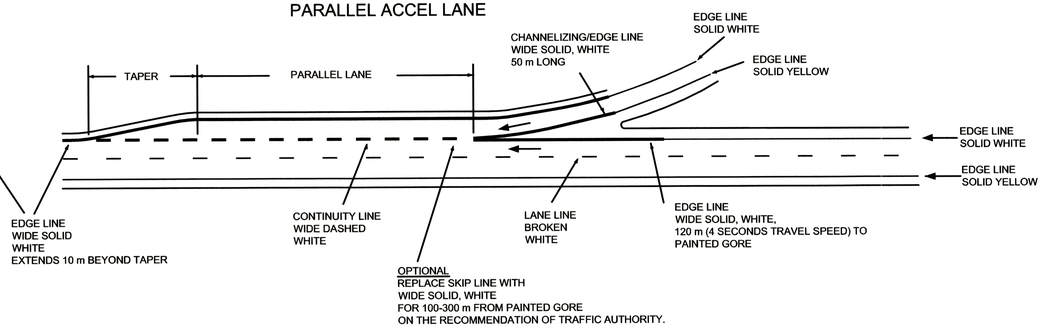

COMBINATION ACCELERATION/DECELERATION LANE MARKINGS
ON-OFF CONTINUOUS LANE
L<650 m

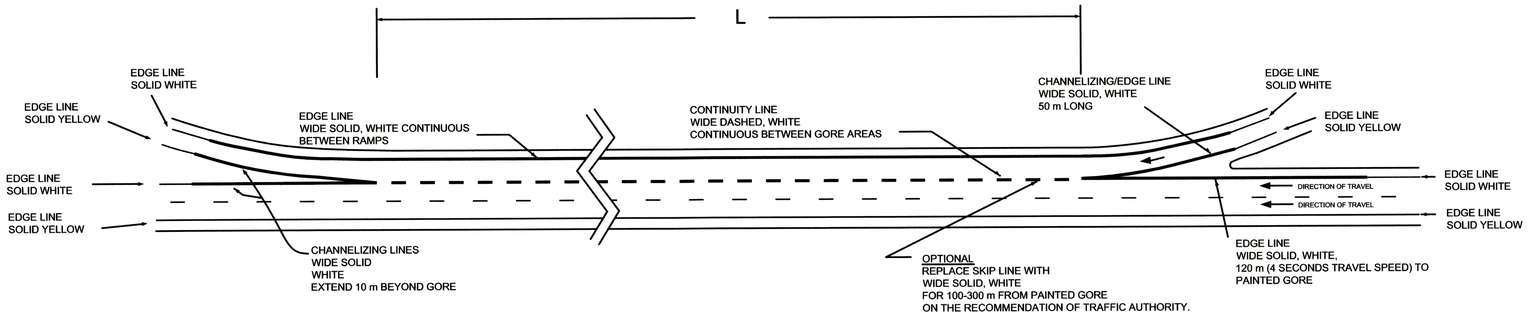

COMBINATION ACCELERATION/DECELERATION LANE MARKINGS
ON-OFF CONTINUOUS LANE
L≥650 m

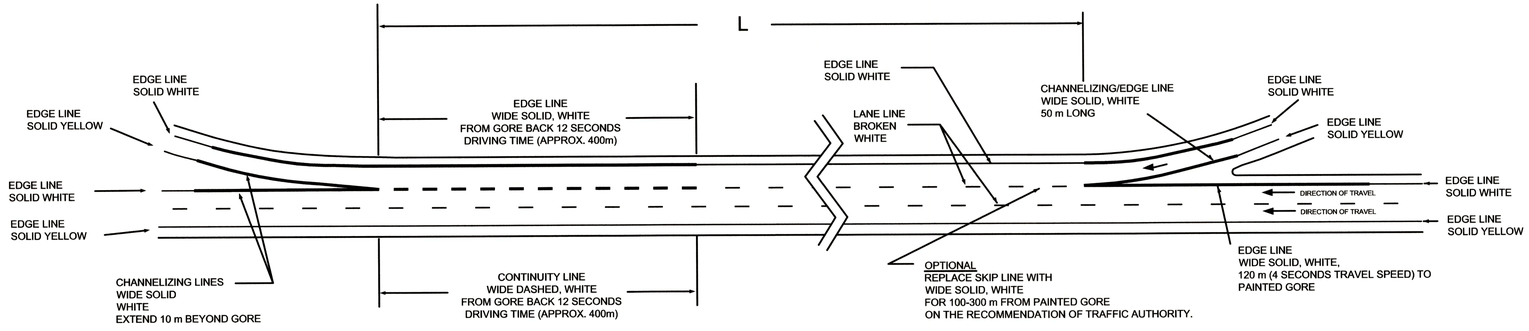

NOTES:

1. CROSS HATCHING IS NOT REQUIRED IN GORE AREAS UNLESS APPROVED BY THE AREA MANAGER.
2. SEE PROCEDURE *PR5093 SIGNING AT 100 SERIES ENTRY RAMPS* FOR SIGNAGE DETAILS

Designed by:		Manager Traffic Engineering Services — Dec 13/13 Date		NOVA SCOTIA Transportation and Infrastructure Renewal	Scale: NTS
Surveyed by:					Date: DEC 2013
Drawn by: R.HIRD		Director, Highway Engineering Services — 13 Dec/13 Date			File No. : S-2013-309
Checked by:			MK. DATE REVISION		Sheet No. : 1 of 1
Approved by:					

HIGHWAY PAVEMENT MARKINGS

ACCELERATION / DECELERATION LANES ON 100 SERIES HIGHWAYS

S-2013-311-1

HIGHWAY PAVEMENT MARKINGS AERIAL SPEED SURVEILLANCE MARKINGS ON 100 SERIES HIGHWAYS

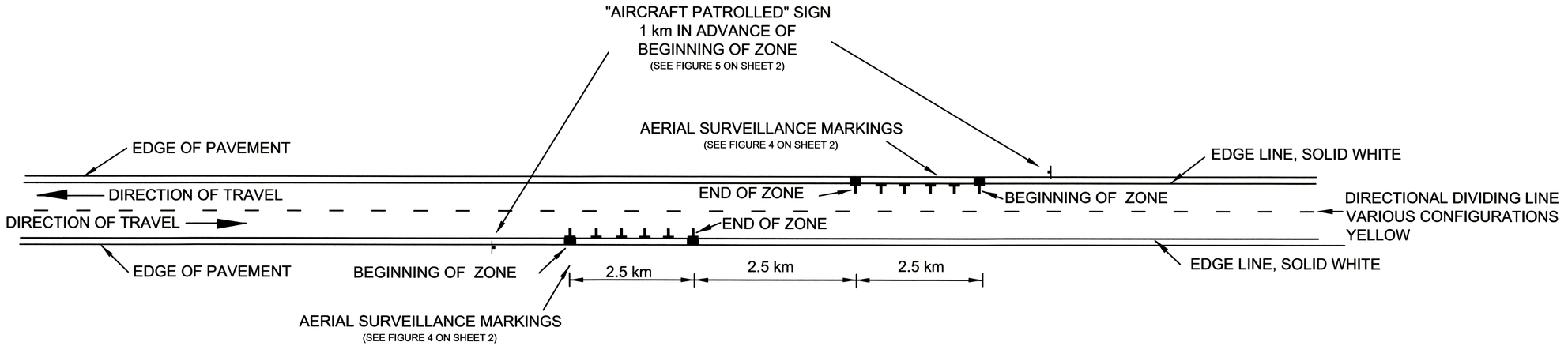

FIGURE 1 - TWO LANE TWO WAY HIGHWAY MARKED IN EACH DIRECTION

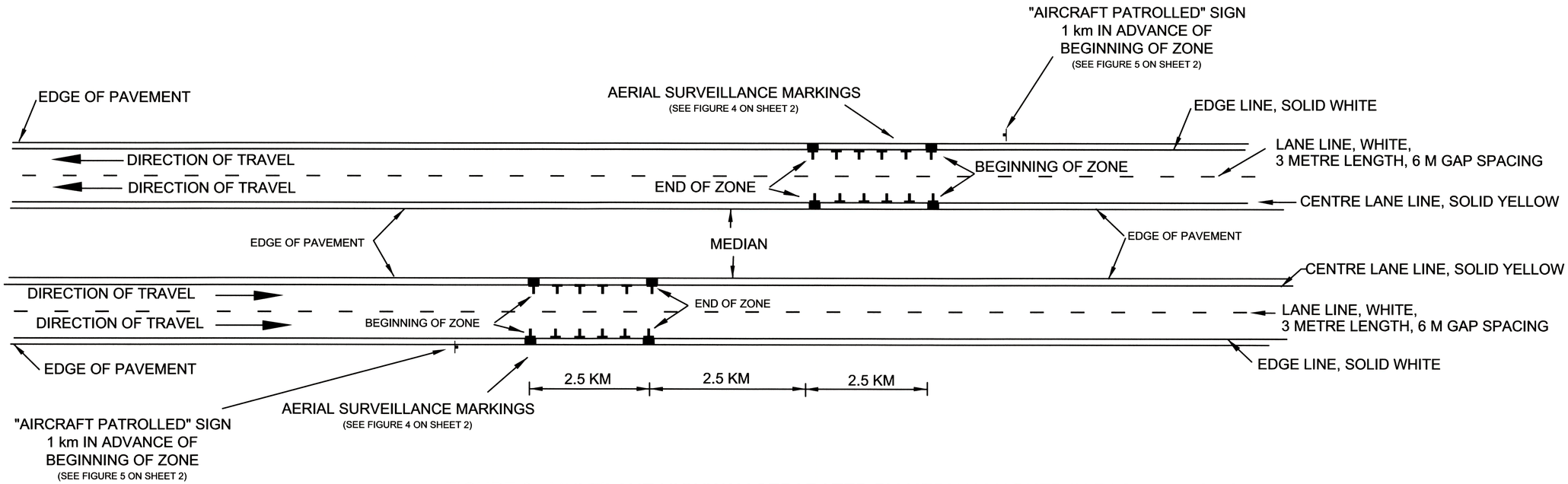

FIGURE 2 - MULTILANE HIGHWAY SEPARATED BY MEDIAN MARKED IN EACH DIRECTION

Designed by:		Manager Traffic Engineering Services — Dec 13/13 Date			Scale: NTS
Surveyed by:					Date: Dec. 2013
Drawn by: D. Bain, R. Hird		Director, Highway Engineering Services — 13 Dec/13 Date	MK.	DATE	REVISION
Checked by:					File No. : S-2013-311-1
Approved by:					Sheet No. : 1 of 2

NOVA SCOTIA
Transportation and Infrastructure Renewal

HIGHWAY PAVEMENT MARKINGS

AERIAL SPEED SURVEILLANCE MARKINGS

S-2013-311-2

HIGHWAY PAVEMENT MARKINGS AERIAL SPEED SURVEILLANCE MARKINGS ON 100 SERIES HIGHWAYS

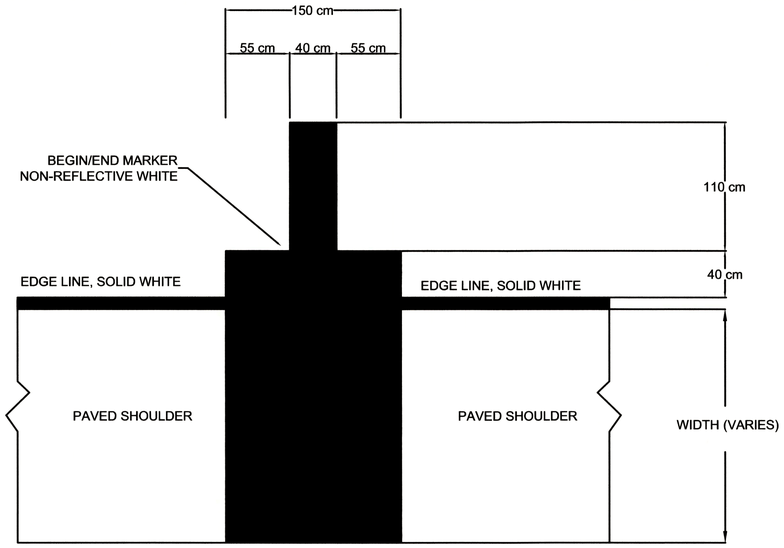

BEGIN / END
PAVEMENT MARKER

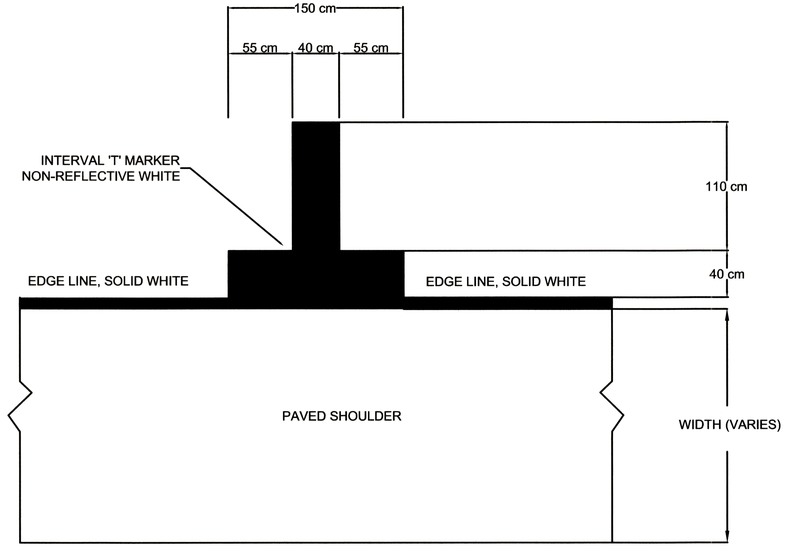

INTERVAL 'T'
PAVEMENT MARKER

FIGURE 3 - PAVEMENT MARKER DETAIL

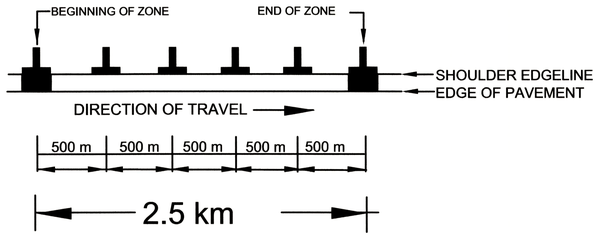

FIGURE 4 - AERIAL SURVEILLANCE MARKINGS PLACEMENT DETAIL



20 CM (8"), FHWA SERIES D
BLACK TEXT ON WHITE BACKGROUND
1" BORDER

150 x 90 CM
OR AS APPROVED BY BY THE TRAFFIC AUTHORITY

FIGURE 5 - INFORMATION SIGN

Designed by:		Manager Traffic Engineering Services — Dec/13/13 Date			NOVA SCOTIA Transportation and Infrastructure Renewal	Scale: NTS	HIGHWAY PAVEMENT MARKINGS
Surveyed by:						Date: Dec. 2013	AERIAL SPEED SURVEILLANCE MARKINGS DETAILS
Drawn by: R. Hird		Director, Highway Engineering Services — 13 Dec/13 Date	MK.	DATE	REVISION	File No. : S-2013-311-2	
Checked by:						Sheet No. : 2 of 2	
Approved by:							

S-2013-312

RAILWAY CROSSING

HIGHWAY PAVEMENT MARKINGS

STANDARD (SHOWN WESTBOUND)

ONE (1) 600 mm WIDE STOP BAR PERPENDICULAR TO THE ROAD, PLACED 5 m FROM THE RAIL TRACKS.

RA-6
1200 mm X 200 mm
(EACH CROSS PIECE)
Installed and Maintained by Rail Authority

"X" SYMBOL, WHITE
STROKE WIDTH 300 mm - 500 mm

WA-18, WA-18R OR WA-18L
DEPENDING ON TRACK CONFIGURATION
750 mm X 750 mm

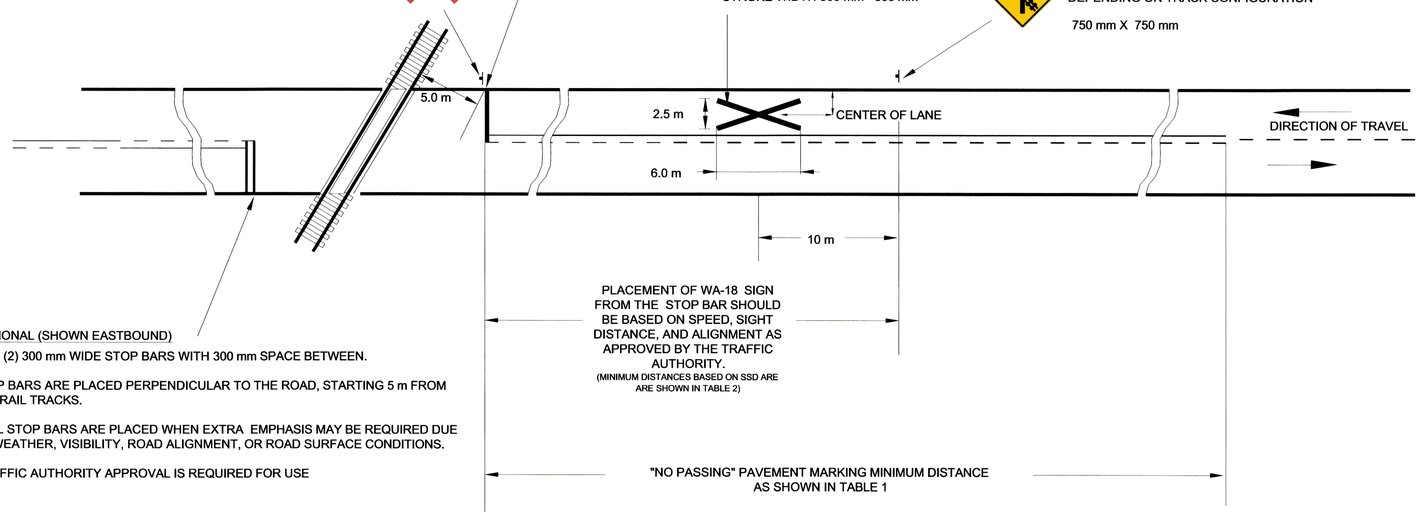

OPTIONAL (SHOWN EASTBOUND)

TWO (2) 300 mm WIDE STOP BARS WITH 300 mm SPACE BETWEEN.

STOP BARS ARE PLACED PERPENDICULAR TO THE ROAD, STARTING 5 m FROM THE RAIL TRACKS.

DUAL STOP BARS ARE PLACED WHEN EXTRA EMPHASIS MAY BE REQUIRED DUE TO WEATHER, VISIBILITY, ROAD ALIGNMENT, OR ROAD SURFACE CONDITIONS.

TRAFFIC AUTHORITY APPROVAL IS REQUIRED FOR USE

PLACEMENT OF WA-18 SIGN FROM THE STOP BAR SHOULD BE BASED ON SPEED, SIGHT DISTANCE, AND ALIGNMENT AS APPROVED BY THE TRAFFIC AUTHORITY.
(MINIMUM DISTANCES BASED ON SSD ARE ARE SHOWN IN TABLE 2)

"NO PASSING" PAVEMENT MARKING MINIMUM DISTANCE AS SHOWN IN TABLE 1

RAILWAY CROSSING

TABLE 1
SOLID LINE LENGTH IN METRES ON APPROACHES TO INTERSECTIONS AND RAILWAY CROSSINGS

SPEED LIMIT (KM/H)	SOLID LINE LENGTH (METRES)
50	80
60	100
70	120
80	140
90	165
100	200
110	240
120	285

REFERENCE: SEE CENTRE LINE MARKING DRAWING PR5050-2

TABLE 2
MINIMUM DISTANCE FOR PLACEMENT OF WA-18(R,L) WARNING SIGN.

SPEED LIMIT (KM/H)	DISTANCE IN METRES
50	65
60	85
70	105
80	130
90	160
100	185
110	220
120	250

REFERENCE: BASED ON SSD (US POLICY ON GEOMETRIC DESIGN OF HIGHWAYS AND STREETS, THE TAC GEOMETRIC DESIGN GUIDE FOR CANADIAN ROADS, TRANSPORT CANADA RTD10 - RAIL CROSSING STUDIES)

NOTES:

1. PAVEMENT MARKINGS AND SIGNING SHALL BE POSTED ON BOTH APPROACHES TO THE RAILWAY CROSSING.
2. SIGHT DISTANCES ALONG TRACKS MUST BE IN ACCORDANCE WITH THE CANADIAN RAILWAY-ROADWAY GRADE CROSSING STANDARDS.
3. THE "X" MARKING MUST BE INSTALLED ON ALL URBAN ROADWAYS POSTED AT 80 km/h OR MORE. THE "X" MARKING MAY BE INSTALLED ON URBAN ROADWAYS POSTED AT LESS THAN 80 km/h IF OPERATIONAL CONCERNS EXIST.
4. THE "X" MARKING MAY BE INSTALLED ON ANY RURAL ROADWAY IF OPERATIONAL CONCERNS EXIST.
5. THE EXACT LOCATION OF THE "X" MARKING WILL DEPEND ON THE PRESENCE OF INTERSECTIONS OR OTHER OBSTRUCTIONS IN ADVANCE OF STOP BARS.
6. ALL TRANSVERSE MARKINGS, INCLUDING STOP LINES MUST BE PLACED AT RIGHT ANGLES TO THE CENTERLINE AND ACROSS ALL APPROACH LANES.

Designed by:		Manager Traffic Engineering Services	Dec 13/13 Date		
Surveyed by:					
Drawn by: R. HIRD		Director, Highway Engineering Services	B Dec/13 Date		
Checked by:					
Approved by:				MK.	DATE / REVISION

NOVA SCOTIA
Transportation and Infrastructure Renewal

Scale:	NTS
Date:	Dec 2013
File No. :	S-2013-312
Sheet No. :	1 of 1

HIGHWAY SIGNAGE AND PAVEMENT MARKINGS

RAILWAY CROSSING

S-2013-313-1

STRAIGHT TRANSITION

SIGNAGE AND PAVEMENT MARKINGS

TRAFFIC ENTERING DIVIDED HIGHWAY ON STRAIGHT ALIGNMENT

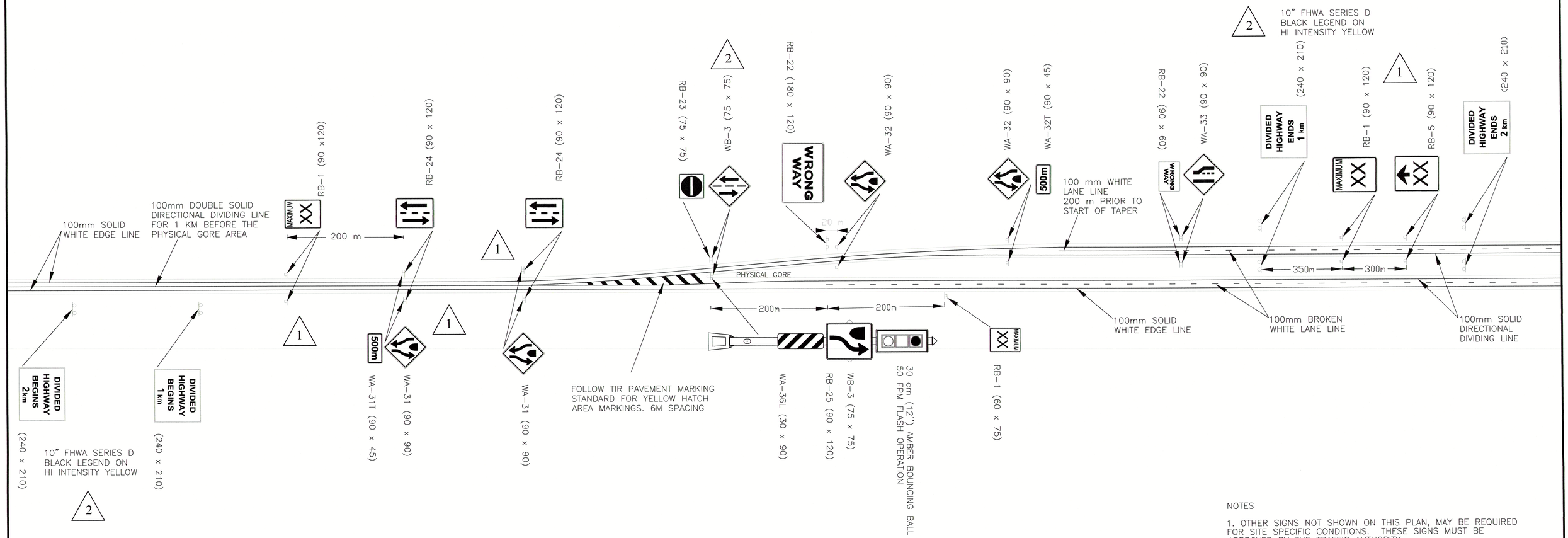

NOTES

1. OTHER SIGNS NOT SHOWN ON THIS PLAN, MAY BE REQUIRED FOR SITE SPECIFIC CONDITIONS. THESE SIGNS MUST BE APPROVED BY THE TRAFFIC AUTHORITY.
2. HIGHWAY MARKINGS WILL FOLLOW THIS PLAN AND TIR PAVEMENT MARKING STANDARDS.
3. GUIDE, SERVICE, TOURISM, BUISNESS LOGO, AND COMMUNITY IDENTITY SIGNS ARE NOT TO BE PLACED WITHIN 1KM OF THE PHYSICAL GORE IN EACH DIRECTION WHENEVER POSSIBLE.
4. MEDIAN FLASHING LIGHT SHALL BE LOCATED IN THE PHYSICAL GORE WITH A MINIMUM OF 3M OFFSET TO DIRECTIONAL DIVIDING LINES (CENTER LINES).
5. ALL DIMENSIONS ARE IN cm UNLESS OTHERWISE NOTED.

Designed by:	
Surveyed by:	
Drawn by:	PH
Checked by:	
Approved by:	

Provincial Traffic Authority — Feb 18/16 Date

Manager, Traffic Engineering Services — Feb 18/16 Date

MK.	DATE	REVISION
2	Jan 2016	Double Post WB-3, Highway Begins and Ends sign details note
1	Sept 2015	Double Post RB-1 RB-24 WA-31 and RB-1 to RB-5 spacing increase

NOVA SCOTIA
Transportation and Infrastructure Renewal

Scale:	Sept 2015
Date:	December 2013
File No. :	S-2013-313-1
Sheet No. :	1 of 2

SIGNS AND MARKINGS

STRAIGHT TRANSITION FROM TWO LANE TWO WAY TO FOUR LANE DIVIDED 100 SERIES HIGHWAYS

S-2013-313-2

CURVED OR TAPERED TRANSITION

SIGNAGE AND PAVEMENT MARKINGS

TRAFFIC ENTERING DIVIDED HIGHWAY ON CURVED OR TAPERED ALIGNMENT

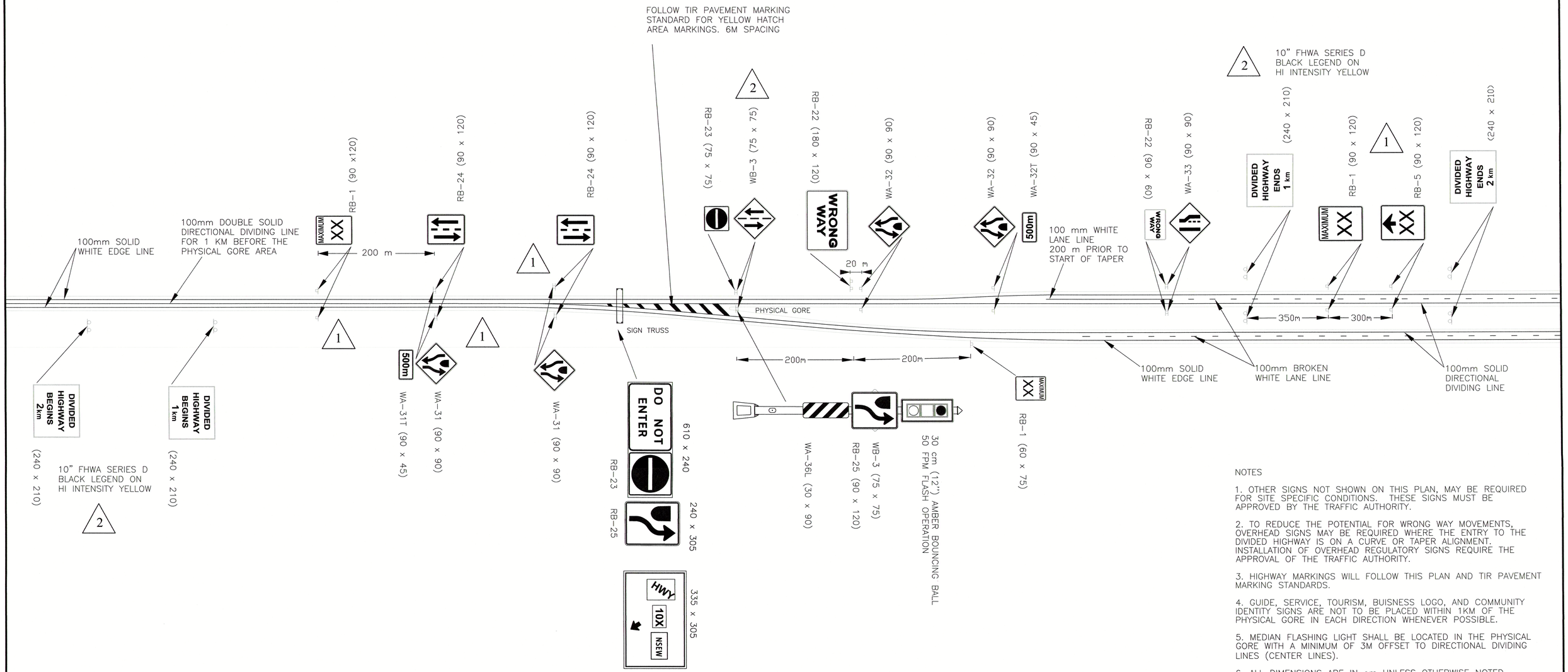

NOTES

1. OTHER SIGNS NOT SHOWN ON THIS PLAN, MAY BE REQUIRED FOR SITE SPECIFIC CONDITIONS. THESE SIGNS MUST BE APPROVED BY THE TRAFFIC AUTHORITY.

2. TO REDUCE THE POTENTIAL FOR WRONG WAY MOVEMENTS, OVERHEAD SIGNS MAY BE REQUIRED WHERE THE ENTRY TO THE DIVIDED HIGHWAY IS ON A CURVE OR TAPER ALIGNMENT. INSTALLATION OF OVERHEAD REGULATORY SIGNS REQUIRE THE APPROVAL OF THE TRAFFIC AUTHORITY.

3. HIGHWAY MARKINGS WILL FOLLOW THIS PLAN AND TIR PAVEMENT MARKING STANDARDS.

4. GUIDE, SERVICE, TOURISM, BUISNESS LOGO, AND COMMUNITY IDENTITY SIGNS ARE NOT TO BE PLACED WITHIN 1KM OF THE PHYSICAL GORE IN EACH DIRECTION WHENEVER POSSIBLE.

5. MEDIAN FLASHING LIGHT SHALL BE LOCATED IN THE PHYSICAL GORE WITH A MINIMUM OF 3M OFFSET TO DIRECTIONAL DIVIDING LINES (CENTER LINES).

6. ALL DIMENSIONS ARE IN cm UNLESS OTHERWISE NOTED.

Designed by:	
Surveyed by:	
Drawn by:	PH
Checked by:	
Approved by:	

Provincial Traffic Authority — Date: Feb 18/16

Manager Traffic Engineering Services — Date: Feb 18/16

MK.	DATE	REVISION
2	Jan 2016	Double Post WB-3, Highway Begins and Ends sign details note
1	Sept 2015	Double Post RB-1 RB-24 WA-31 and RB-1 to RB-5 spacing increase

NOVA SCOTIA
Transportation and Infrastructure Renewal

Scale:	NTS
Date:	December 2013
File No. :	S-2013-313-2
Sheet No. :	2 of 2

SIGNS AND MARKINGS

CURVED OR TAPERED TRANSITION FROM TWO LANE TWO WAY TO FOUR LANE DIVIDED 100 SERIES HIGHWAYS

S-2013-320

DIAMOND INTERCHANGE WITHOUT ISLANDS

HIGHWAY PAVEMENT MARKINGS

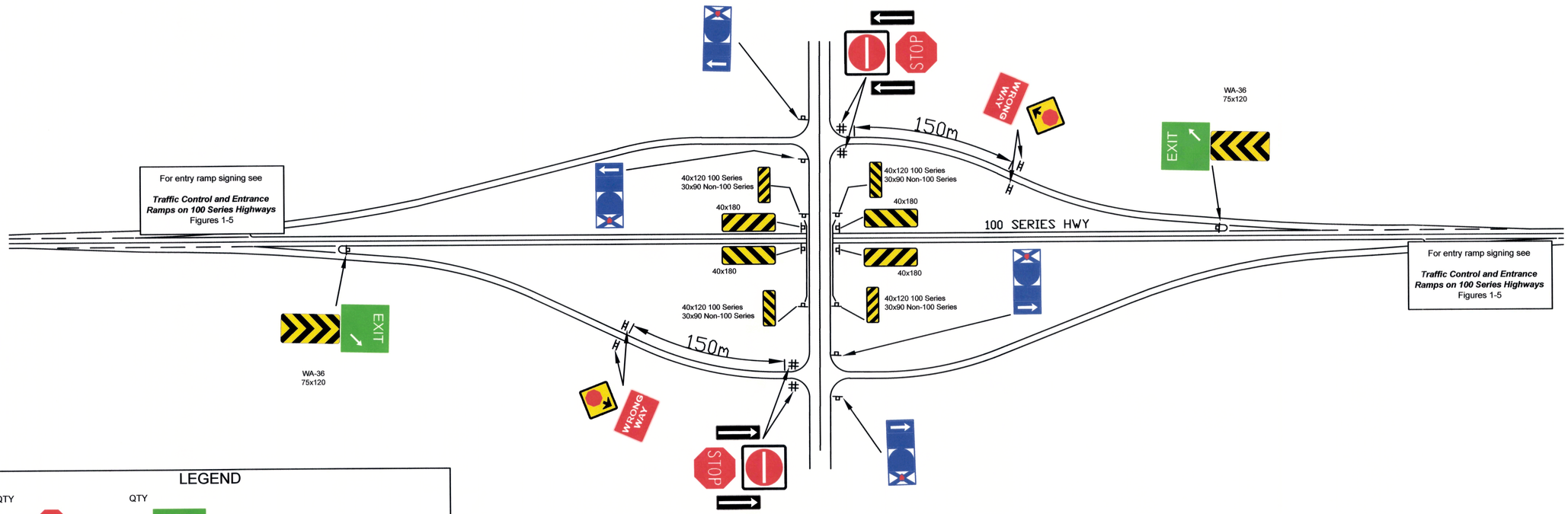

LEGEND

QTY			QTY		
4	STOP	RA-1 75 X 75	2	EXIT	120 x 120
4		RB-23 60 x 60	2 ea.		WA-36 R&L 40x120 100 Series 30x90 Non-100 Series
4		WB-1 75 X 75	2 ea.		WA-36 R&L 40 x 180
4	WRONG WAY	RB-22 90 x 60	2		WA-36 75 x 120
4		RB-21 90 x 30			
4		RB-21 90 x 30			

TRANS CANADA HIGHWAY ID MARKER IB-1: 45 x 60
HIGHWAY NUMBER: 45 x 30
CARDINAL DIRECTION: 45 x 30, 45 x 30

PROVINCIAL HIGHWAY ID MARKER
HIGHWAY NUMBER: 45 x 60
CARDINAL DIRECTION: 45 x 30, 45 x 30

NOTES

1. This plan is to be used as a guide. The location and spacing of each sign should be modified as required to meet the needs of each individual interchange. The Provincial Traffic Authority must be consulted to authorize any signing changes.
2. Entry ramp signing to be erected in accordance with TIR Manual Procedure PR5093 *Signage at 100 Series Entry Ramps.*
3. For Object Marker placement details, refer to TIR Manual Policy PO1014 *Application Guide for Installation of Object Markers.*

Designed by:	
Surveyed by:	
Drawn by:	BS, PH, DM
Checked by:	
Approved by:	

Manager Traffic Engineering Services — July 31, 2013 Date

Traffic Authority — July 31/13 Date

MK.	DATE	REVISION
1	July 2013	Note 3 added, Note 2 amended, Sign quantities adjusted, Surround updated

NOVA SCOTIA
Transportation and Infrastructure Renewal

Scale:	NTS
Date:	October 2006
File No.:	S-2013-320
Sheet No.:	1 of 1

STANDARD SIGNAGE PLAN

DIAMOND INTERCHANGE WITHOUT ISLANDS AT RAMP TERMINALS

S-2013-321

STANDARD SIGNING PLAN DIAMOND INTERCHANGE WITH ISLANDS

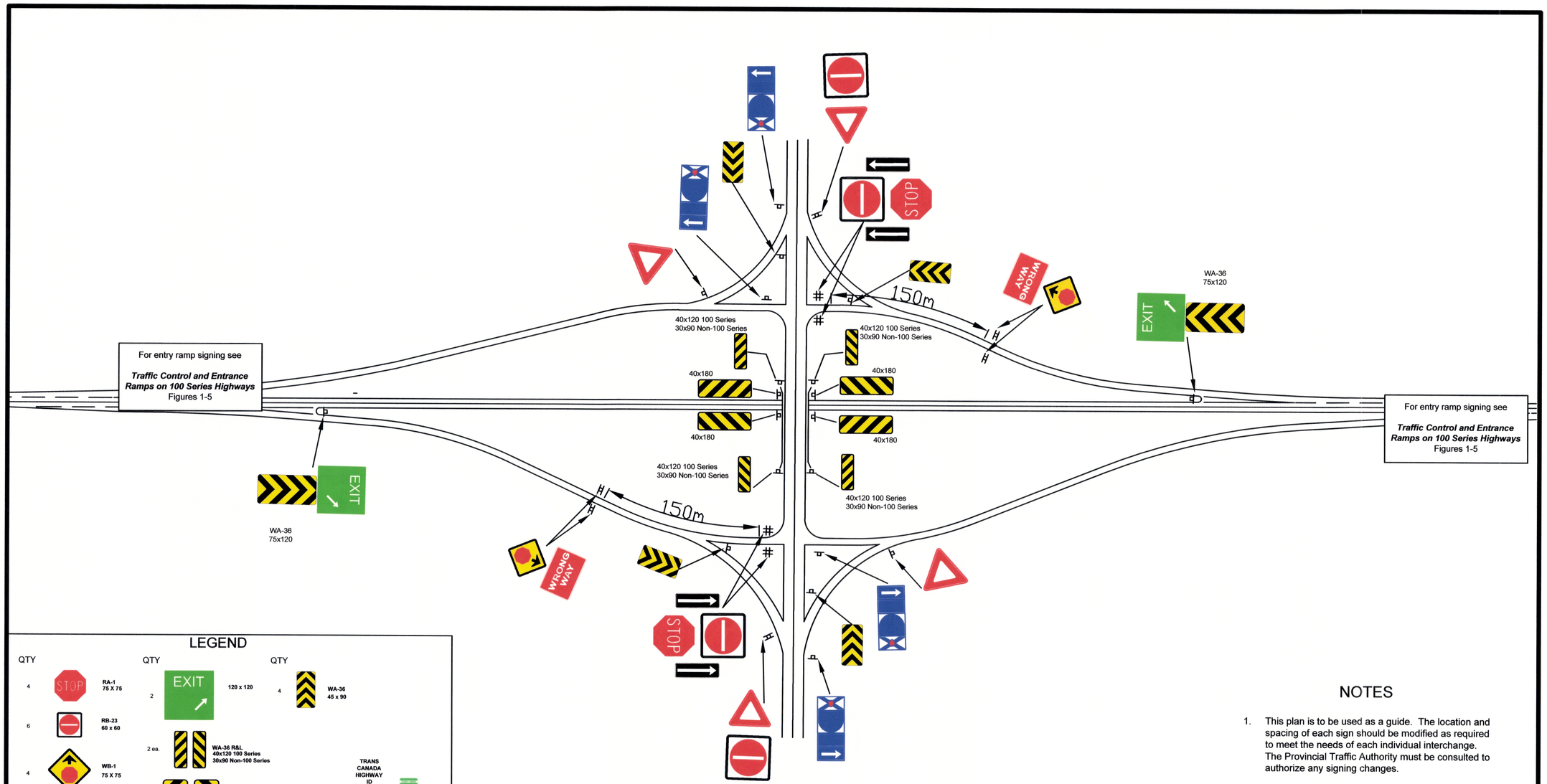

LEGEND

QTY			QTY			QTY	
4	STOP	RA-1 75 X 75	2	EXIT	120 x 120	4	WA-36 45 x 90
6		RB-23 60 x 60	2 ea.		WA-36 R&L 40x120 100 Series 30x90 Non-100 Series		
4		WB-1 75 X 75					TRANS CANADA HIGHWAY ID MARKER IB-1 45 x 60
4	WRONG WAY	RB-22 90 x 60	2 ea.		WA-36 R&L 40 x 180		HIGHWAY NUMBER 45 x 30
4		RB-21 90 x 30					CARDINAL DIRECTION 45 x 30
4		RB-21 90 x 30					45 x 30
4		RA-2 75 x 75	2		WA-36 75 x 120		PROVINCIAL HIGHWAY ID MARKER
							HIGHWAY NUMBER 45 x 60
							CARDINAL DIRECTION 45 x 30
							45 x 30

NOTES

1. This plan is to be used as a guide. The location and spacing of each sign should be modified as required to meet the needs of each individual interchange. The Provincial Traffic Authority must be consulted to authorize any signing changes.
2. Entry ramp signing to be erected in accordance with TIR Manual Procedure PR5093 *Signage at 100 Series Entry Ramps.*
3. For Object Marker placement details, refer to TIR Manual Policy PO1014 *Application Guide for Installation of Object Markers.*

Designed by:	
Surveyed by:	
Drawn by:	BS, PH, DM
Checked by:	
Approved by:	

Manager Traffic Engineering Services — July 31, 2013 Date

Traffic Authority — July 31/13 Date

MK.	DATE	REVISION
1	July 2013	Note 3 added, Note 2 amended, Sign quantities adjusted, Surround updated

NOVA SCOTIA
Transportation and Infrastructure Renewal

Scale:	NTS
Date:	October 2006
File No. :	S-2013-321
Sheet No. :	1 of 1

STANDARD SIGNAGE PLAN

DIAMOND INTERCHANGE WITH ISLANDS AT RAMP TERMINALS

S-2013-322

PARCLO INTERCHANGE WITHOUT ISLANDS

STANDARD SIGNING PLAN

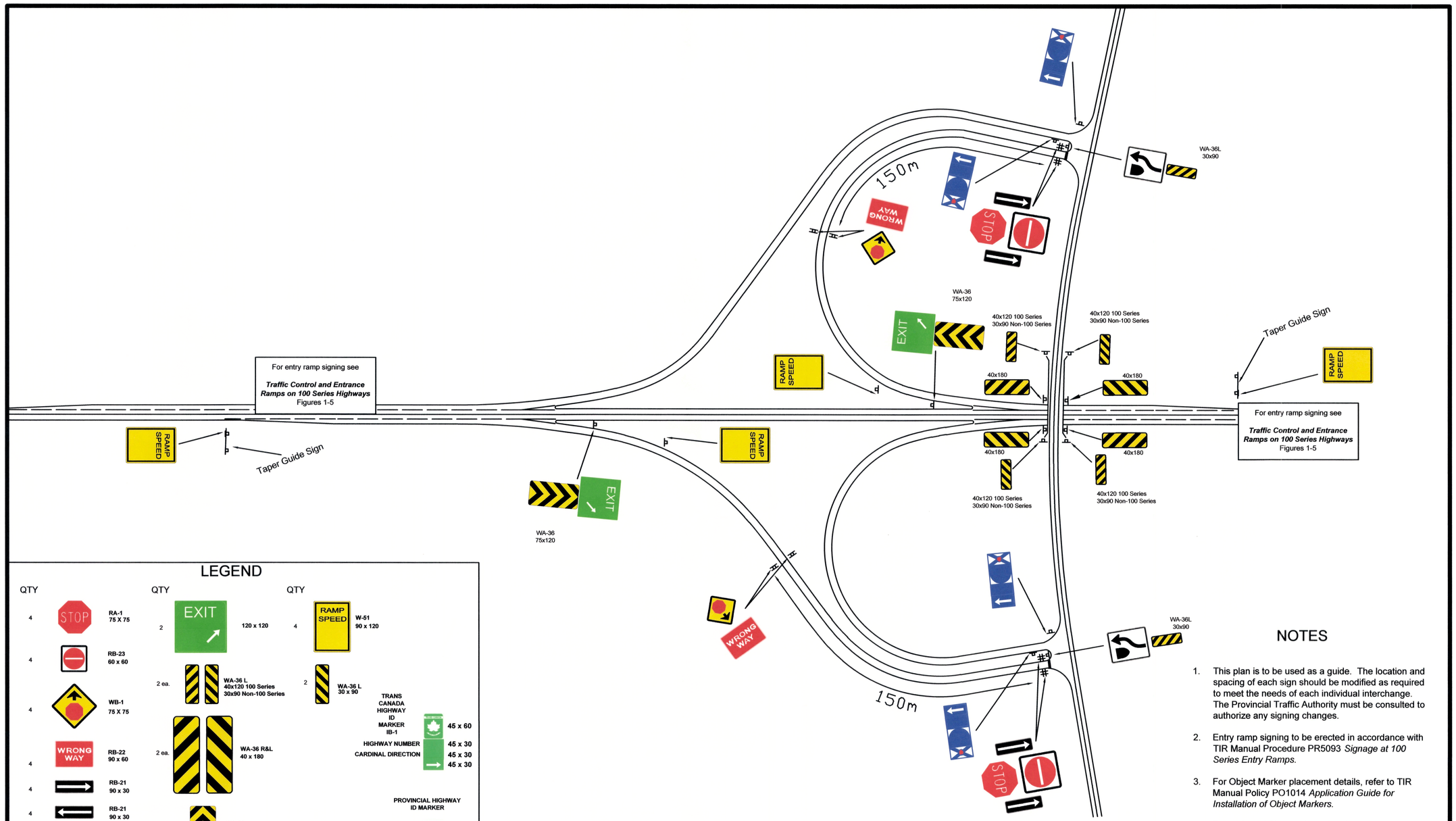

LEGEND

QTY			QTY			QTY		
4	STOP	RA-1 75 X 75	2	EXIT	120 x 120	4	RAMP SPEED	W-51 90 x 120
4		RB-23 60 x 60	2 ea.		WA-36 L 40x120 100 Series 30x90 Non-100 Series	2		WA-36 L 30 x 90
4		WB-1 75 X 75	2 ea.		WA-36 R&L 40 x 180		TRANS CANADA HIGHWAY ID MARKER IB-1	45 x 60
4	WRONG WAY	RB-22 90 x 60					HIGHWAY NUMBER	45 x 30
4		RB-21 90 x 30					CARDINAL DIRECTION	45 x 30 45 x 30
4		RB-21 90 x 30	2		WA-36 75 x 120		PROVINCIAL HIGHWAY ID MARKER	
2		RB-25 60 x 75					HIGHWAY NUMBER	45 x 60
							CARDINAL DIRECTION	45 x 30 45 x 30

NOTES

1. This plan is to be used as a guide. The location and spacing of each sign should be modified as required to meet the needs of each individual interchange. The Provincial Traffic Authority must be consulted to authorize any signing changes.
2. Entry ramp signing to be erected in accordance with TIR Manual Procedure PR5093 *Signage at 100 Series Entry Ramps.*
3. For Object Marker placement details, refer to TIR Manual Policy PO1014 *Application Guide for Installation of Object Markers.*
4. Ramp Speed Signs to be erected in accordance with TIR Manual Policy PO1050 *Curve Warning Signs.*

Designed by:	
Surveyed by:	
Drawn by:	BS, PH, DM
Checked by:	
Approved by:	

Manager Traffic Engineering Services — July 31/2013 Date

Traffic Authority — July 31/13 Date

MK.	DATE	REVISION
1	July 2013	Notes 3 and 4 added, Note 2 amended, sign quatities adjusted,
		surround updated

NOVA SCOTIA
Transportation and Infrastructure Renewal

Scale:	NTS
Date:	October 2006
File No. :	S-2013-322
Sheet No. :	1 of 1

STANDARD SIGNAGE PLAN

PARCLO INTERCHANGE WITHOUT ISLANDS AT RAMP TERMINALS

S-2013-323

PARCLO INTERCHANGE WITH ISLANDS

STANDARD SIGNING PLAN

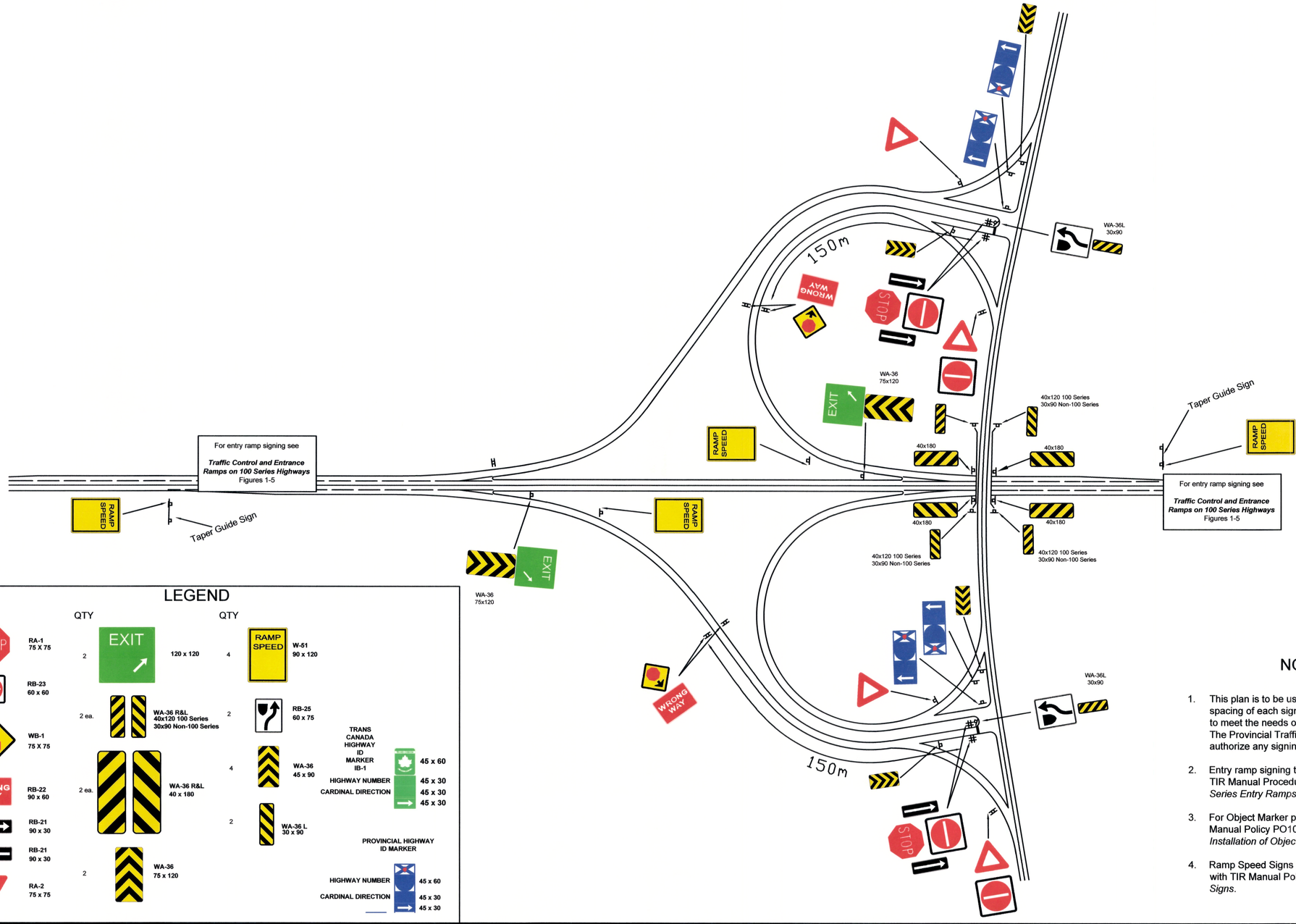

LEGEND

QTY			QTY			QTY		
4	STOP	RA-1 75 X 75	2	EXIT	120 x 120	4	RAMP SPEED	W-51 90 x 120
4		RB-23 60 x 60	2 ea.		WA-36 R&L 40x120 100 Series 30x90 Non-100 Series	2		RB-25 60 x 75
4		WB-1 75 X 75	2 ea.		WA-36 R&L 40 x 180	4		WA-36 45 x 90
4	WRONG WAY	RB-22 90 x 60				2		WA-36 L 30 x 90
4		RB-21 90 x 30	2		WA-36 75 x 120			
4		RB-21 90 x 30						
4		RA-2 75 x 75						

TRANS CANADA HIGHWAY ID MARKER IB-1
HIGHWAY NUMBER 45 x 60
CARDINAL DIRECTION 45 x 30, 45 x 30, 45 x 30

PROVINCIAL HIGHWAY ID MARKER
HIGHWAY NUMBER 45 x 60
CARDINAL DIRECTION 45 x 30, 45 x 30

NOTES

1. This plan is to be used as a guide. The location and spacing of each sign should be modified as required to meet the needs of each individual interchange. The Provincial Traffic Authority must be consulted to authorize any signing changes.
2. Entry ramp signing to be erected in accordance with TIR Manual Procedure PR5093 *Signage at 100 Series Entry Ramps.*
3. For Object Marker placement details, refer to TIR Manual Policy PO1014 *Application Guide for Installation of Object Markers.*
4. Ramp Speed Signs to be erected in accordance with TIR Manual Policy PO1050 *Curve Warning Signs.*

Designed by:		
Surveyed by:		
Drawn by:	BS, PH, DM	
Checked by:		
Approved by:		

Manager Traffic Engineering Services — July 31, 2013 Date

Traffic Authority — July 31/13 Date

MK.	DATE	REVISION
1	July 2013	Notes 3 and 4 added, Note 2 amended, Sign quantities adjusted, surround updated

NOVA SCOTIA
Transportation and Infrastructure Renewal

Scale:	NTS
Date:	October 2006
File No. :	S-2013-323
Sheet No. :	1 of 1

STANDARD SIGNAGE PLAN

PARCLO INTERCHANGE WITH ISLANDS AT RAMP TERMINALS

S-2013-324

TRUMPET INTERCHANGE

STANDARD SIGNING PLAN

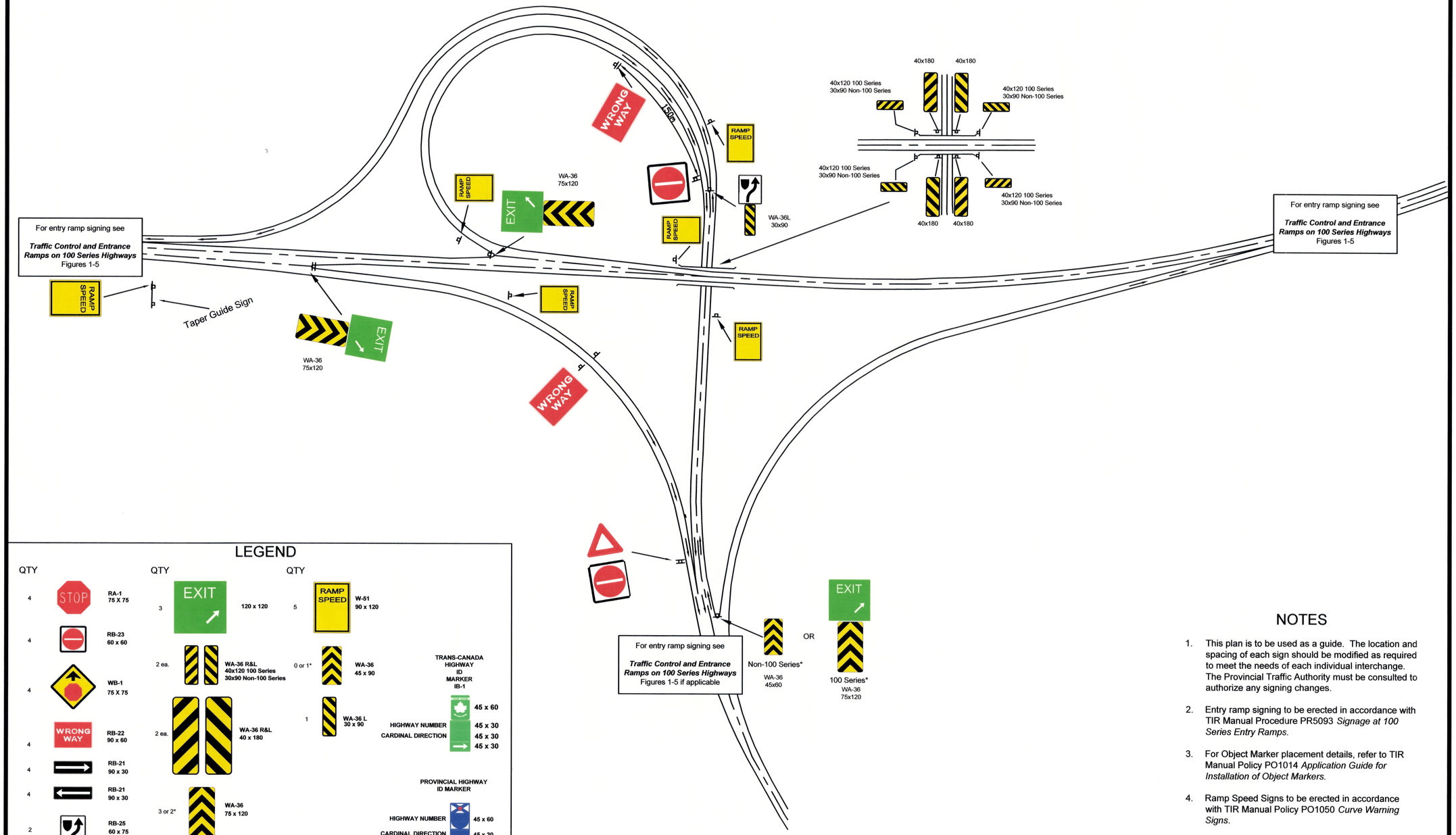

LEGEND

QTY		
4	STOP	RA-1 75 X 75
4		RB-23 60 x 60
4		WB-1 75 X 75
4	WRONG WAY	RB-22 90 x 60
4		RB-21 90 x 30
4		RB-21 90 x 30
2		RB-25 60 x 75

QTY		
3	EXIT	120 x 120
2 ea.		WA-36 R&L 40x120 100 Series 30x90 Non-100 Series
2 ea.		WA-36 R&L 40 x 180
3 or 2*		WA-36 75 x 120

QTY		
5	RAMP SPEED	W-51 90 x 120
0 or 1*		WA-36 45 x 90
1		WA-36 L 30 x 90

TRANS-CANADA HIGHWAY ID MARKER IB-1 — 45 x 60

HIGHWAY NUMBER — 45 x 30

CARDINAL DIRECTION — 45 x 30 / 45 x 30

PROVINCIAL HIGHWAY ID MARKER

HIGHWAY NUMBER — 45 x 60

CARDINAL DIRECTION — 45 x 30 / 45 x 30

NOTES

1. This plan is to be used as a guide. The location and spacing of each sign should be modified as required to meet the needs of each individual interchange. The Provincial Traffic Authority must be consulted to authorize any signing changes.
2. Entry ramp signing to be erected in accordance with TIR Manual Procedure PR5093 *Signage at 100 Series Entry Ramps.*
3. For Object Marker placement details, refer to TIR Manual Policy PO1014 *Application Guide for Installation of Object Markers.*
4. Ramp Speed Signs to be erected in accordance with TIR Manual Policy PO1050 *Curve Warning Signs.*

Designed by:	
Surveyed by:	
Drawn by:	BS, PH, DM
Checked by:	
Approved by:	

Manager Traffic Engineering Services — July 21, 2013 Date

Traffic Authority — July 31/13 Date

MK.	DATE	REVISION
1	July 2013	Notes 3 and 4 added, note 2 amended, sign quantities adjusted, surround updated

NOVA SCOTIA
Transportation and Infrastructure Renewal

Scale:	NTS
Date:	October 2006
File No. :	S-2013-324
Sheet No. :	1 of 1

STANDARD SIGNAGE PLAN

TRUMPET INTERCHANGE

S-2013-325

STANDARD SIGNING PLAN

INTERCHANGE WITH ROUNDABOUT RAMP TERMINALS

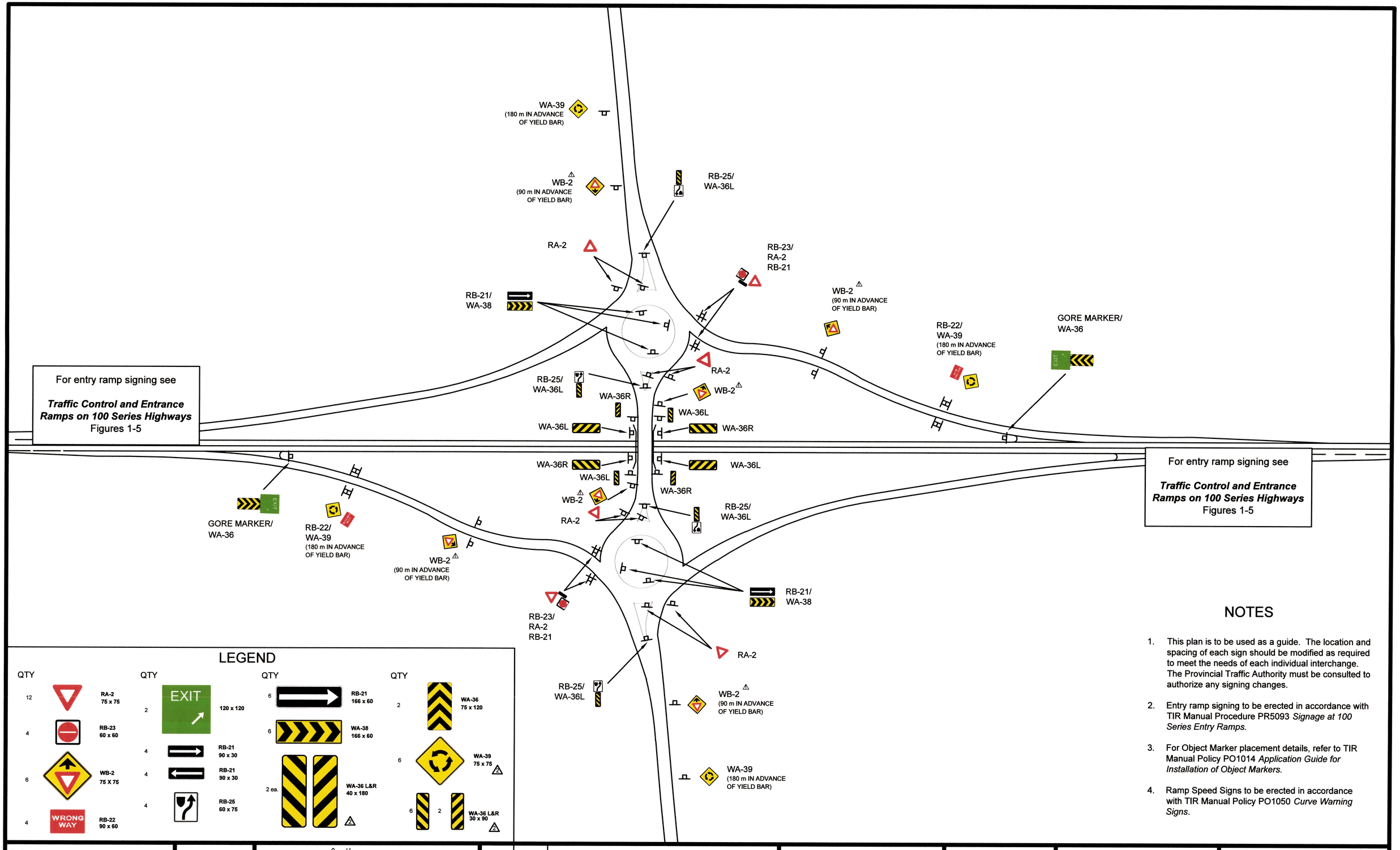

For entry ramp signing see

Traffic Control and Entrance Ramps on 100 Series Highways
Figures 1-5

For entry ramp signing see

Traffic Control and Entrance Ramps on 100 Series Highways
Figures 1-5

LEGEND

QTY		QTY		QTY		QTY	
12	RA-2 75 x 75	2	EXIT 120 x 120	6	RB-21 166 x 60	2	WA-36 75 x 120
4	RB-23 60 x 60	4	RB-21 90 x 30	6	WA-38 166 x 60	6	WA-39 75 x 75 [2]
6	WB-2 75 X 75	4	RB-21 90 x 30	2 ea.	WA-36 L&R 40 x 180 [2]	6 / 2	WA-36 L&R 30 x 90 [2]
4	WRONG WAY RB-22 90 x 60	4	RB-25 60 x 75				

NOTES

1. This plan is to be used as a guide. The location and spacing of each sign should be modified as required to meet the needs of each individual interchange. The Provincial Traffic Authority must be consulted to authorize any signing changes.
2. Entry ramp signing to be erected in accordance with TIR Manual Procedure PR5093 *Signage at 100 Series Entry Ramps.*
3. For Object Marker placement details, refer to TIR Manual Policy PO1014 *Application Guide for Installation of Object Markers.*
4. Ramp Speed Signs to be erected in accordance with TIR Manual Policy PO1050 *Curve Warning Signs.*

Designed by:	
Surveyed by:	
Drawn by:	R. Hird
Checked by:	P. Hill
Approved by:	

Manager Traffic Engineering Services — Dec 9/14 Date

Traffic Authority — Dec 9/14 Date

MK.	DATE	REVISION
2	Nov 6, 2014	Changes to Sign legend
1	Nov. 29/13	Corrected error in sign labeling

NOVA SCOTIA
Transportation and Infrastructure Renewal

Scale:	NTS
Date:	July 2013
File No. :	S-2013-325
Sheet No. :	1 of 1

STANDARD SIGNAGE PLAN

INTERCHANGE WITH ROUNDABOUT RAMP TERMINALS

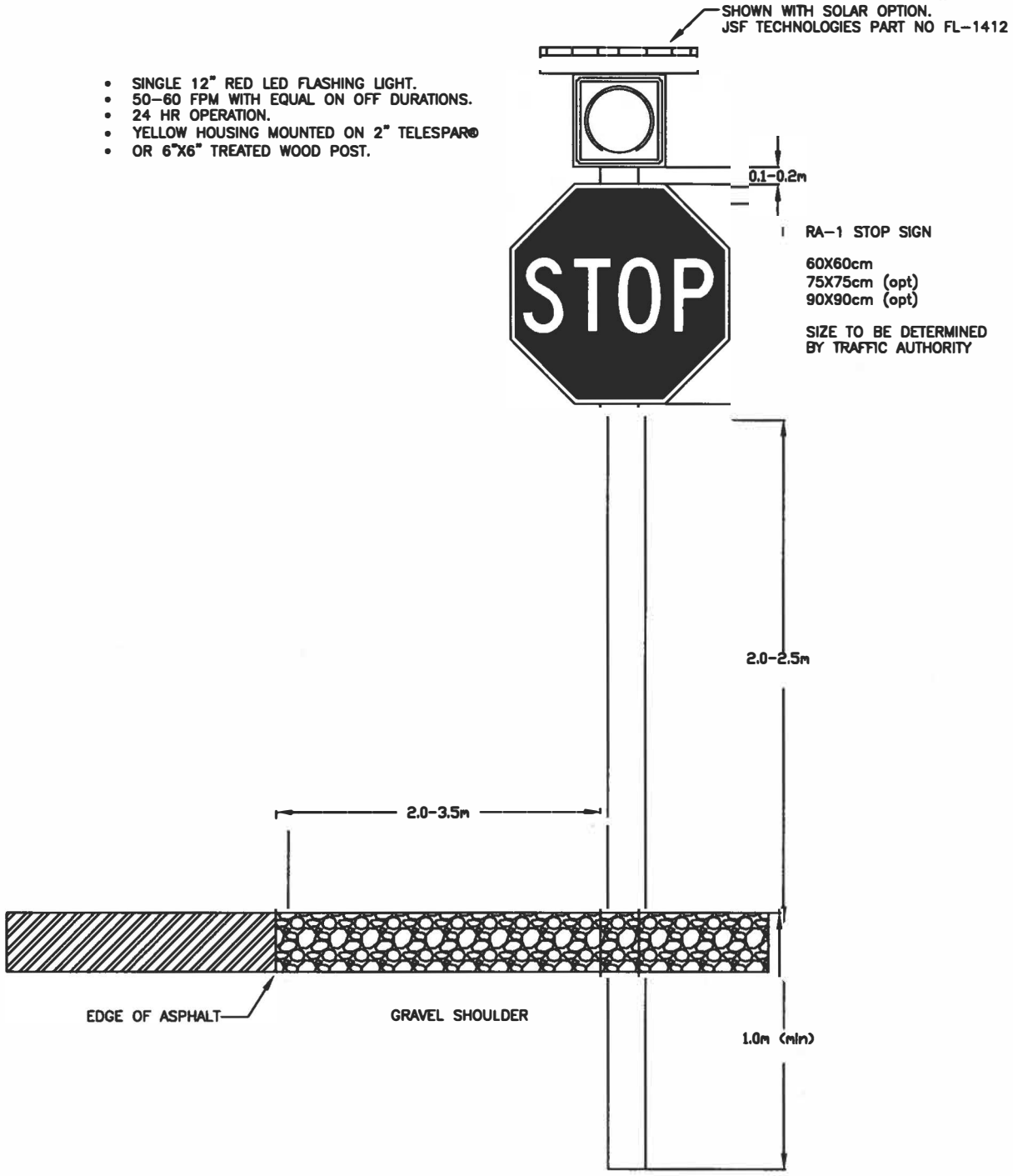

NOTES:
1.

Scale :	N.T.S.
Drawn by :	P.HILL
Checked by :	R.HIRD
Date of Plan :	SEPT2013
File No. :	S-2013-326

Manager Traffic Engineering Services

Director Highway Engineering Services

Executive Director Highway Engineering and Construction

NOVA SCOTIA
Transportation and Infrastructure Renewal

No.	REVISION

STOP SIGN WITH FLASHING BEACON

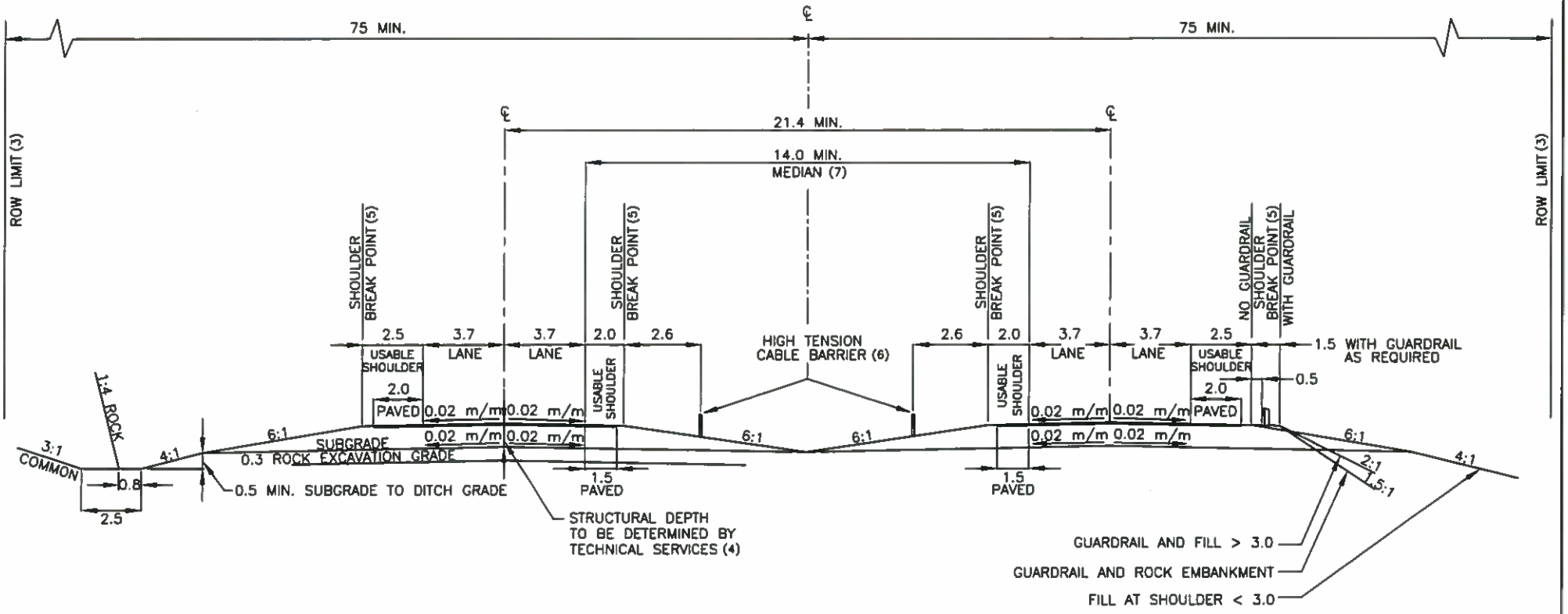

NOTES:
1. ALL DIMENSIONS ARE IN METRES UNLESS OTHERWISE NOTED.
2. DIMENSIONS ARE MEASURED PERPENDICULAR TO CENTERLINE.
3. TO BE ADJUSTED TO ALLOW FOR MINIMUM OF 5.0m BEYOND DAYLIGHT LOCATION OR EXCEPTIONALLY 3.0m MAY BE ACCEPTABLE.
4. THE SUBGRADE WIDTH IS DEPENDENT UPON THE DEPTH OF STRUCTURAL MATERIAL.
5. 0.8m ROUNDING CENTERED ON SHOULDER BREAK POINT IF GUARDRAIL NOT INSTALLED.
6. PLACEMENT OF BARRIER TO BE DETERMINED BASED ON HORIZONTAL GEOMETRY.
7. INSTALL ROUNDED DEPRESSION OR SWALE WITH DRAINAGE TREATMENT AS REQUIRED IN MEDIAN.
8. CABLE BARRIER TO BE BRIFEN SYSTEM MEETING TL-4 OR APPROVED EQUIVALENT.

NOVA SCOTIA
Transportation and Infrastructure Renewal

No.	REVISION

Scale :	N.T.S.
Drawn by :	G.WRIGHT
Checked by :	K.BODDY
Date of Plan :	SEPT2014
File No. :	S-2014-029

Manager Highway Planning and Design

Director Highway Engineering Services

Executive Director Highway Engineering and Construction

STANDARD CROSS SECTION FREEWAY CABLE BARRIER MEDIAN (A)

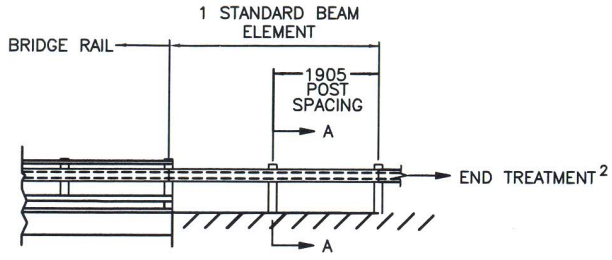

ELEVATION – TIMBER BRIDGE WITH PL1, LVPL1, OR LVPL2 BARRIER[4,5,6,7]

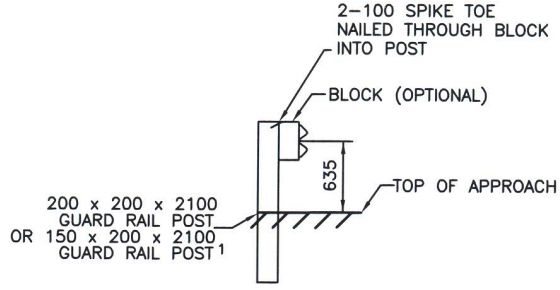

SECTION A–A[1]

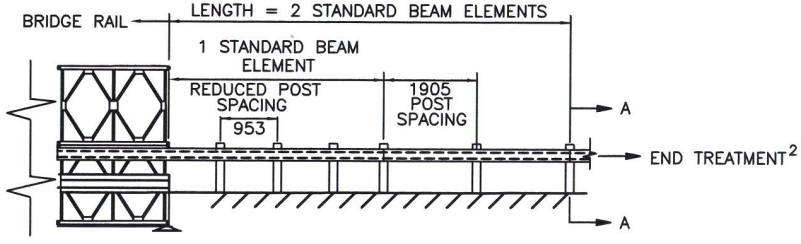

ELEVATION – STEEL TRUSS BRIDGE [4,6,7]

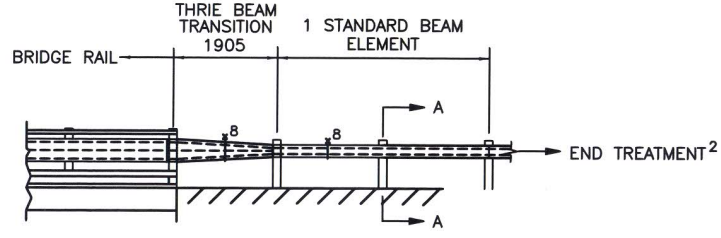

ELEVATION – THRIE BEAM TRANSITION[4,5,6,7,8]

NOTES:
1. SEE GUARDRAIL AND POST DETAILS, STANDARD DRAWING FILE NO.: S–2009–071.
2. SEE STANDARD DRAWING S–2009–072 FOR END TREATMENT.
3. ALL DIMENSIONS ARE IN MILLIMETRES UNLESS OTHERWISE NOTED.
4. DETAIL APPLIES TO ALL 4 CORNERS OF BRIDGE.
5. SEE STANDARD DRAWINGS FOR DETAILS ON LVPL1 (B–2007–144), LVPL2 (B–2007–145), AND PL1 (B–2007–146).
6. IF BRIDGE RAIL HAS A THRIE BEAM, TRANSITIONS SHALL BE OFF–STRUCTURE.
7. DETAIL APPLIES TO BRIDGES WITHOUT CONCRETE END BLOCKS ON NON–100 SERIES HIGHWAYS ONLY. IF BRIDGE HAS CONCRETE END BLOCKS OR IS LOCATED ON 100 SERIES, STANDARD DRAWING S–2009–073 APPLIES.
8. ADD POST AT POINT "X" IF APPROACH TO TRUSS BRIDGE.

Manager Structural Engineering

Director Highway Engineering Services

Executive Director Highway Engineering and Construction

NOVA SCOTIA
Transportation and Infrastructure Renewal

No.	REVISION

Scale :	N.T.S.
Drawn by :	R.SWINEMAR
Checked by :	A.MEMON
Date of Plan :	07/29/2014
File No. :	S–2014–81

TIMBER BRIDGE AND STEEL TRUSS BRIDGE APPROACH GUARDRAIL

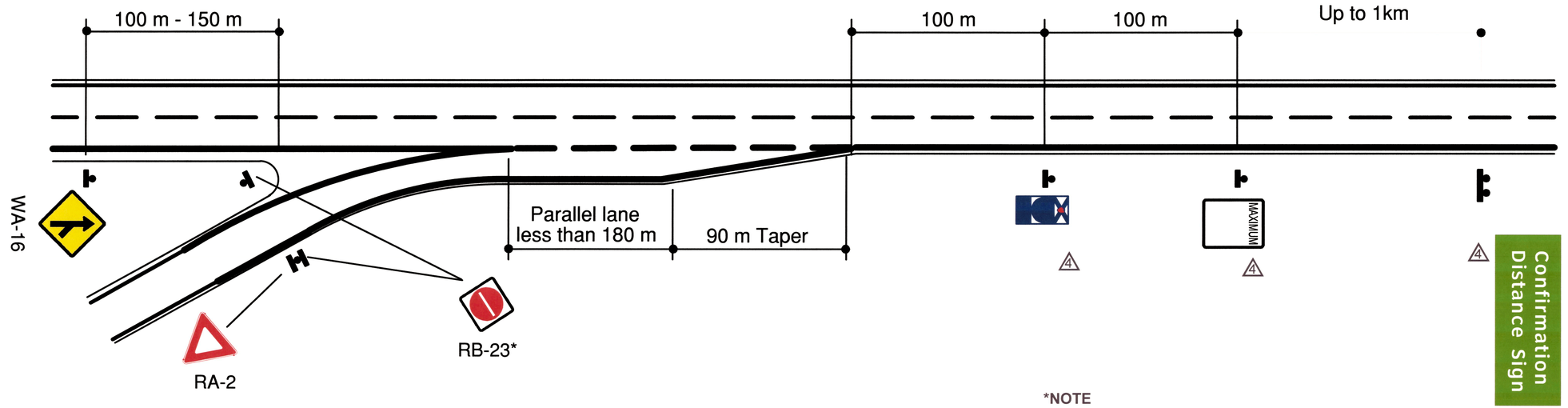

*NOTE

RB-23 Not required on
divided highways

NOVA SCOTIA
Transportation and Infrastructure Renewal
Highway Programs
Traffic Engineering Services

No.	Date	By	Revision
4	11/28/2014	RH	Addition of downstream signs
3	7/02/2009	RH	Separation of figures into separate drawings
2	1/03/2006	DB	Addition of new title block
1	1/03/2002	BS	Original Drawing

DB, BS — Prepared — 1 MAR. 2006 — Date

Deputy / Provincial Traffic Authority — Dec 9 14 — Date

Drawing Title:

TRAFFIC CONTROL AT HIGHWAY ENTRANCE RAMPS ON 100 SERIES HIGHWAYS

Figure 1
Short Parallel Lane

Scale: NOT TO SCALE

Date: 1 MARCH 2006

Drawing No.: S-2014-327

Sheet No.: 1 of 1

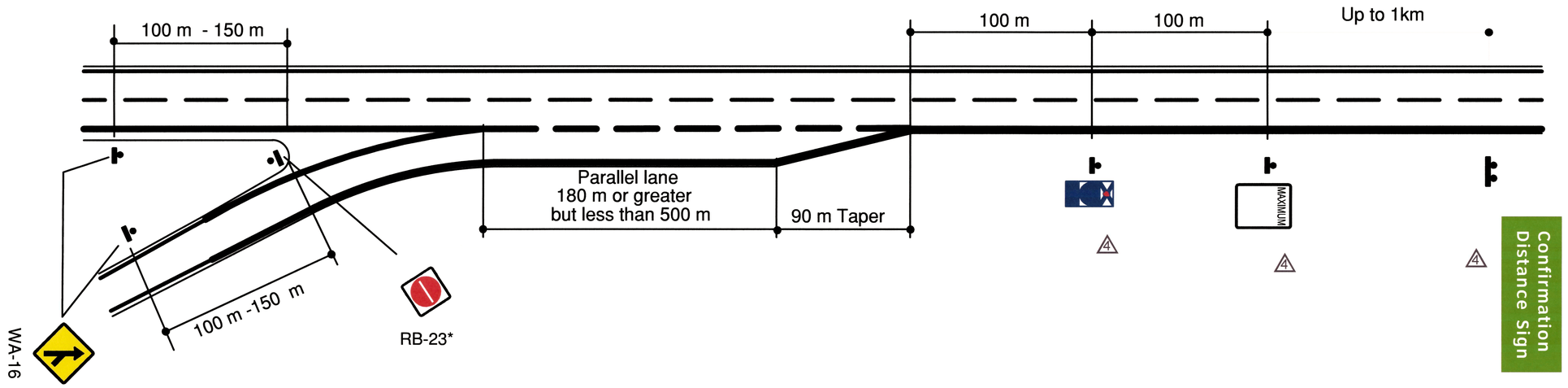

*NOTE

RB-23 Not required on
divided highways

NOVA SCOTIA
Transportation and Infrastructure Renewal
Highway Programs
Traffic Engineering Services

No.	Date	By	Revision
4	11/28/2014	RH	Addition of downstream signs
3	7/02/2009	RH	Separation of figures into separate drawings
2	1/03/2006	DB	Addition of new title block
1	1/03/2002	BS	Original Drawing

DB, BS — Prepared — 1 MAR. 2006 — Date

Deputy / Provincial Traffic Authority — Dec 9/14 — Date

Drawing Title:
TRAFFIC CONTROL AT HIGHWAY ENTRANCE RAMPS ON 100 SERIES HIGHWAYS

Figure 2
Standard Parallel Lane

Scale: NOT TO SCALE
Date: 1 MARCH 2006
Drawing No.: S-2014-328
Sheet No.: 1 of 1

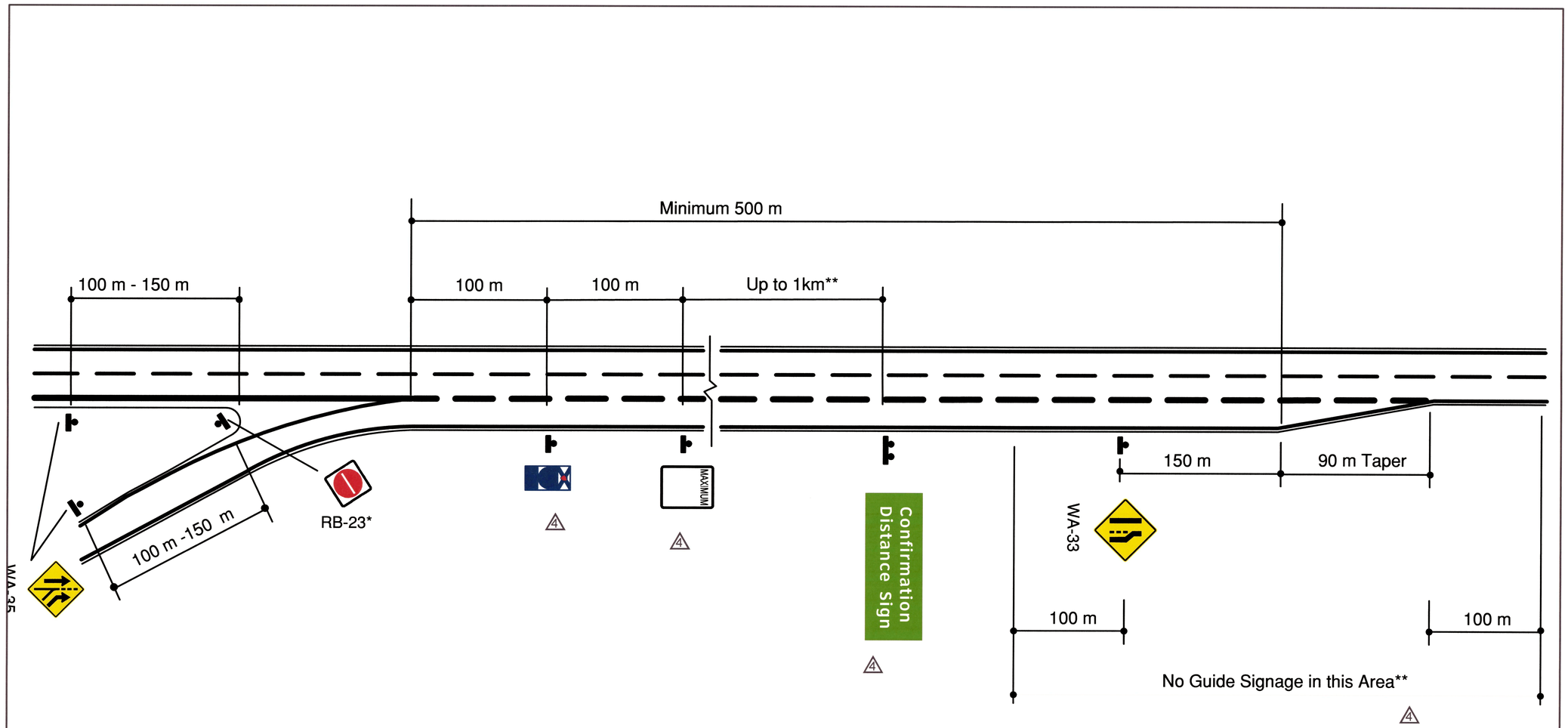

*RB-23 Not required on divided highways

** Confirmation Distance Sign not to be placed within 100m of the WA-33 or the taper.

NOVA SCOTIA
Transportation and Infrastructure Renewal
Highway Programs
Traffic Engineering Services

No.	Date	By	Revision
4	11/28/2014	RH	Addition of downstream signs
3	7/02/2009	RH	Separation of figures into separate drawings
2	1/03/2006	DB	Addition of new title block
1	1/03/2002	BS	Original Drawing

DB, BS — Prepared — 1 MAR. 2006 — Date

Deputy / Provincial Traffic Authority — Dec 9/14 — Date

Drawing Title:
TRAFFIC CONTROL AT HIGHWAY ENTRANCE RAMPS ON 100 SERIES HIGHWAYS

Figure 3
Long Parallel Lane

Scale: NOT TO SCALE
Date: 1 MARCH 2006
Drawing No.: S-2014-329
Sheet No.: 1 of 1

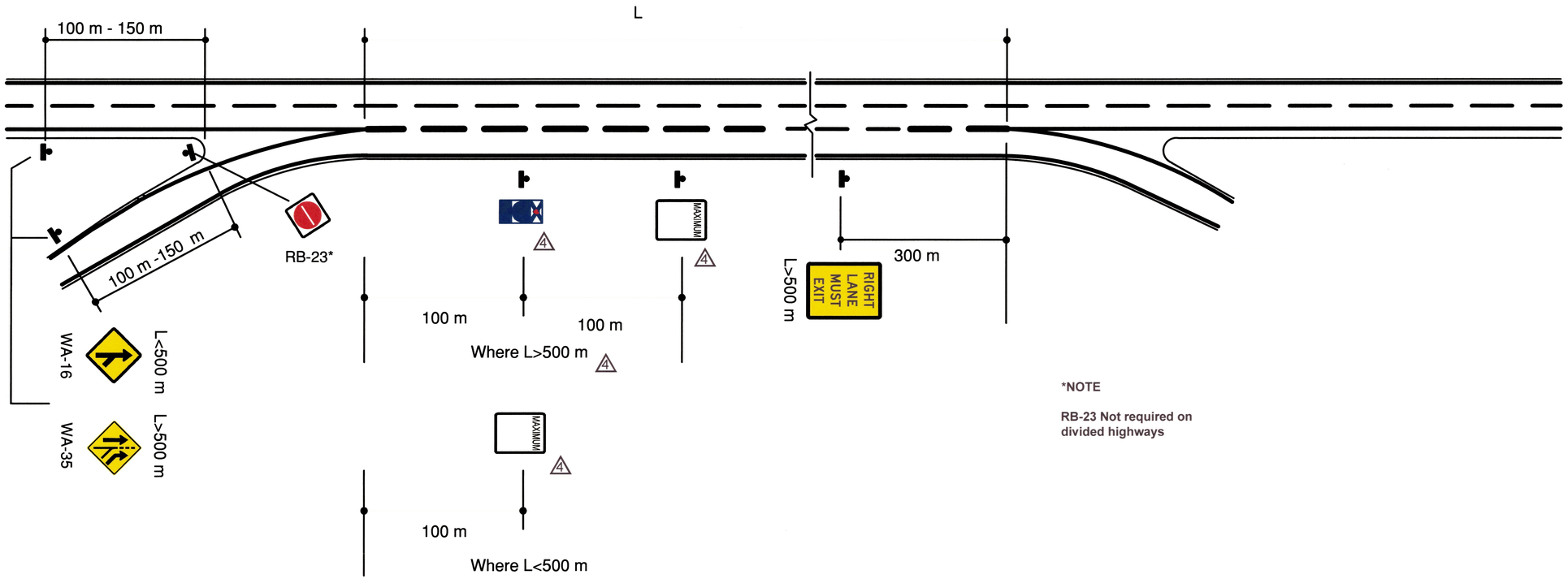

*NOTE

RB-23 Not required on divided highways

NOVA SCOTIA
Transportation and Infrastructure Renewal
Highway Programs
Traffic Engineering Services

No.	Date	By	Revision
4	11/28/2014	RH	Addition of downstream signs
3	7/02/2009	RH	Separation of figures into separate drawings
2	1/03/2006	DB	Addition of new title block
1	1/03/2002	BS	Original Drawing

DB, BS — Prepared — 1 MAR. 2006 — Date

Deputy / Provincial Traffic Authority — Dec 9/14 — Date

Drawing Title:
TRAFFIC CONTROL AT HIGHWAY ENTRANCE RAMPS ON 100 SERIES HIGHWAYS

Figure 4
Continuous Entry-Exit Ramp

Scale: NOT TO SCALE
Date: 1 MARCH 2006
Drawing No.: S-2014-330
Sheet No.: 1 of 1

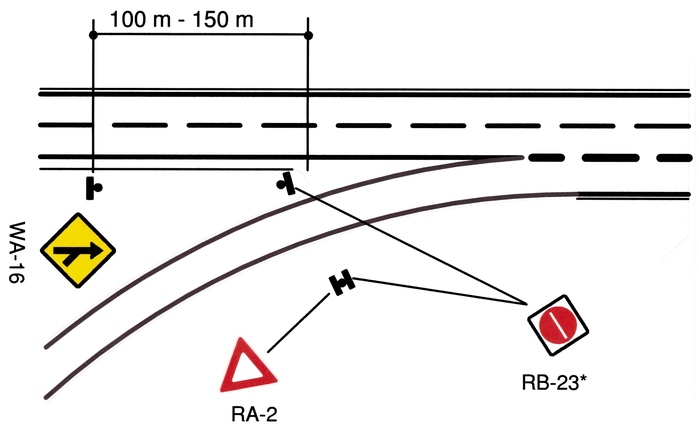

*NOTE

RB-23 Not required on divided highways

NOVA SCOTIA
Transportation and Infrastructure Renewal
Highway Programs
Traffic Engineering Services

No.	Date	By	Revision
2	11/28/2014	RH	Clarification of interchange configuration
1	11/28/2014	RH	Addition of downstream signs

RH — Prepared — 2 July 2009 — Date

Deputy / Provincial Traffic Authority — Dec 5/14 — Date

Drawing Title:

TRAFFIC CONTROL AT HIGHWAY ENTRANCE RAMPS ON 100 SERIES HIGHWAYS

Figure 5
Cloverleaf Interchange

Scale: NOT TO SCALE

Date: 2 July 2009

Drawing No.: S-2014-331

Sheet No.: 1 of 1

DESIGN GUIDE

PARAMETER \ FUNCTIONAL CLASSIFICATION	FREEWAY & MAJOR ARTERIAL A,B	MINOR ARTERIAL		COLLECTOR		LOCAL				TRUCK ROUTE	
		C	D	MAJOR E	MINOR F	G	H	I	J	M	N
DESIGN YEAR TRAFFIC. AADT	>10000	>5000	<5000	>3000	<3000	>300	<300	<50			
DESIGN HOURLY VOLUME	>450	>450	<450	>250	<250						
DESIGN SPEED RANGE, km/h	120–90	100–80	90–80	90–80	80–70	80–60	70–50		50	90–80	80–50
GRADIENT – MAXIMUM, %	6	7	7	8	9	10	12		8	7	9
SURFACE TYPE	PAVED	PAVED	PAVED	PAVED	PAVED	OPTIONAL	UNPAVED	UNPAVED	OPTIONAL	PAVED	OPTIONAL
LANE WIDTH, m	3.7	3.7	3.5	3.5	3.3	3.0	4.0	3.3	3.0	3.5	3.3
SHOULDER TYPE	PAVED OUT–2.0 IN–1.5	PAVED 0.5	PAVED 0.3	PAVED 0.0–0.2 (1)	UNPAVED	UNPAVED			OPTIONAL	UNPAVED	UNPAVED
SHOULDER WIDTH (USEABLE), m	OUT–2.5 IN–2.0	2.2	2.0	2.0	1.5	1.2			1.6	2.0	1.2
SHOULDER ROUNDING, m (11)	0.8	0.6	0.6	0.4	0.4	0.4			0.4	0.6	0.4
FINISHED TOP WIDTH, m	11.9–12.4	11.8	11.0	11.0	9.6	8.4	8.0	6.6	9.2	11.0	9.0
SIDE SLOPES (2)	4:1	3:1	3:1	2:1	2:1	2:1	1.5:1	1.5:1	2:1	2:1	2:1
BACK SLOPES (3)	3:1	2:1	2:1	2:1	2:1	2:1	1.5:1	1.5:1	2:1	2:1	2:1
MINIMUM ROW WIDTH (4)	150 & 60	60	60	50	50	40	30	30	40	50	50

DESIGN SPEED PARAMETERS (5)(10)

DESIGN SPEED, km/h	120	110	100	90	80	70	60	50
POSTED SPEED – MAXIMUM, km/h	120	110	100	90	80	70	60	50
HORIZONTAL CURVE – MINIMUM RADIUS, m (6)(7)	750	600	440 / 1270 (7)	340	250	190	130	90
STOPPING SIGHT DISTANCE – MINIMUM, m (8)	290	250	210	170	140	110	85	65
VERTICAL SAG CURVE – MINIMUM, k (9)	60	55	50	40	30	25	20	11
VERTICAL CREST CURVE – MINIMUM, k (9)	105	85	70	55	35	22	15	7
PASSING SIGHT DISTANCE – MINIMUM, m	800	730	680	610	550	490	410	350

NOTES:
1. 0.0 FOR AADT <5000; 0.2 FOR AADT >5000.
2. ON EMBANKMENTS OVER 3m, MAY BE REDUCED TO 2:1 WITH THE INSTALLATION OF GUARDRAIL IF ECONOMICALLY FEASIBLE.
3. MAXIMUM SLOPES; STEEPER SLOPES MAY BE PERMITTED AS DETERMINED BY LABORATORY TESTS; IN CUTS OVER 3m MUST BE DETERMINED BY LABORATORY TESTS PRIOR TO CONSTRUCTION.
4. ROW LIMIT TO BE ADJUSTED TO ALLOW FOR MINIMUM OF 5.0m BEYOND DAYLIGHT LOCATION OR EXCEPTIONALLY 3.0m MAY BE ACCEPTABLE.
5. RURAL; FOR URBAN SEE TAC GEOMETRIC DESIGN GUIDE FOR CANADIAN ROADS.
6. BASED ON MAXIMUM SUPER ELEVATION OF 0.06 m/m.
7. MINIMUM RADIUS REQUIRED TO ACHIEVE HORIZONTAL SIGHT DISTANCE WHEN JERSEY BARRIER USED.
8. BASED ON EYE HEIGHT OF 1.05m AND OBJECT HEIGHT OF 380mm.
9. K–VALUES ARE BASED ON HEADLIGHT CONTROL.
10. THE TAC GEOMETRIC DESIGN GUIDE FOR CANADIAN ROADS SHOULD BE CONSULTED WHEN COMBINING MINIMUM VALUES.
11. ROUNDING CENTERED ON SHOULDER BREAK POINT IF GUARDRAIL NOT INSTALLED.

Manager Highway Planning and Design

Director Highway Engineering Services

Executive Director Highway Engineering and Construction

NOVA SCOTIA
Transportation and Infrastructure Renewal

No.	REVISION

Scale : N.T.S.
Drawn by : G.WRIGHT
Checked by : K.BODDY
Date of Plan : NOV–2015
File No. : S–2015–001

HIGHWAY DESIGN GUIDELINES

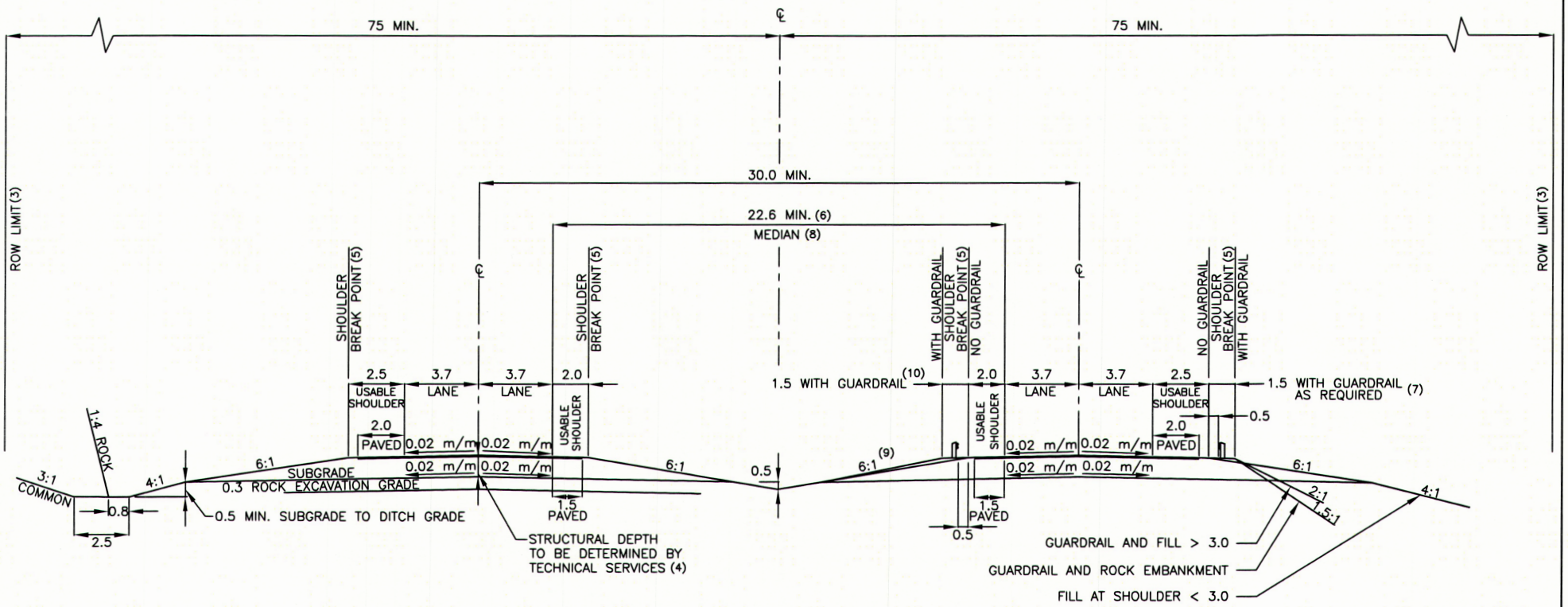

NOTES:
1. ALL DIMENSIONS ARE IN METRES UNLESS OTHERWISE NOTED.
2. DIMENSIONS ARE MEASURED PERPENDICULAR TO CENTERLINE.
3. TO BE ADJUSTED TO ALLOW FOR MINIMUM OF 5.0m BEYOND DAYLIGHT LOCATION OR EXCEPTIONALLY 3.0m MAY BE ACCEPTABLE.
4. THE SUBGRADE WIDTH IS DEPENDENT UPON THE DEPTH OF STRUCTURAL MATERIAL.
5. 0.8m ROUNDING CENTERED ON SHOULDER BREAK POINT IF GUARDRAIL NOT INSTALLED.
6. APPLICABLE TO SOME TWINNING PROJECTS. WIDER MEDIANS SHOULD BE CONSIDERED FOR GREENFIELD ALIGNMENTS, THROUGH SIDE HILL AREAS, ON CURVES, ETC.
7. IF GUARDRAIL IS INSTALLED THE SIDE SLOPE OF THE STRUCTURAL MATERIAL WILL VARY.
8. INSTALL ROUNDED DEPRESSION OR SWALE WITH DRAINAGE TREATMENT AS REQUIRED IN MEDIAN.
9. MEDIAN SLOPES CAN BE INCREASED FROM 6:1 TO AS MUCH AS 4:1 WHERE UNAVOIDABLE, AND ONLY WITH NSTIR APPROVAL.
10. GUARDRAIL TO BE USED FOR BRIDGE APPROACHES. WHERE MEDIAN SLOPES WOULD NEED TO EXCEED THOSE DESCRIBED IN NOTE 9, GUARDRAIL CAN BE USED PROVIDED MINIMUM SIGHT DISTANCES ARE MAINTAINED.

Manager Highway Planning and Design

Director Highway Engineering Services

Executive Director Highway Engineering and Construction

NOVA SCOTIA
Transportation and Infrastructure Renewal

No.	REVISION
1	ADDED NOTES 9 AND 10 – JAN 2019

Scale :	N.T.S.
Drawn by :	G.WRIGHT
Checked by :	K.BODDY
Date of Plan :	NOV–2015
File No. :	S–2015–003

STANDARD CROSS SECTION FREEWAY OPEN MEDIAN (A)

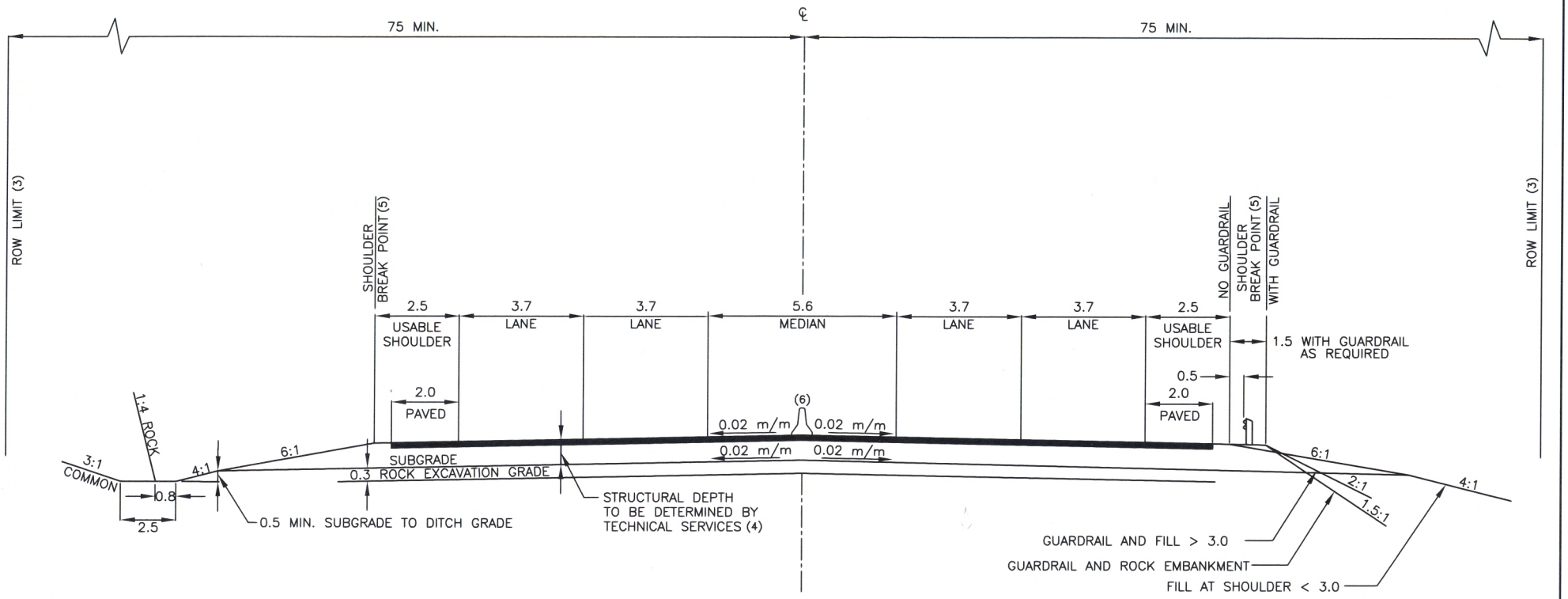

NOTES:
1. ALL DIMENSIONS ARE IN METRES UNLESS OTHERWISE NOTED.
2. DIMENSIONS ARE MEASURED PERPENDICULAR TO CENTERLINE.
3. TO BE ADJUSTED TO ALLOW FOR MINIMUM OF 5.0m BEYOND DAYLIGHT LOCATION OR EXCEPTIONALLY 3.0m MAY BE ACCEPTABLE.
4. THE SUBGRADE WIDTH IS DEPENDENT UPON THE DEPTH OF STRUCTURAL MATERIAL.
5. 0.8m ROUNDING CENTERED ON SHOULDER BREAK POINT IF GUARDRAIL NOT INSTALLED.
6. REFER TO STANDARD DRAWING: S-2009-022 JERSEY BARRIER.

Manager Highway Planning and Design

Director Highway Engineering Services

Executive Director Highway Engineering and Construction

NOVA SCOTIA
Transportation and Infrastructure Renewal

No.	REVISION

Scale :	N.T.S.
Drawn by :	G.WRIGHT
Checked by :	K.BODDY
Date of Plan :	NOV-2015
File No. :	S-2015-004

STANDARD CROSS SECTION FREEWAY JERSEY BARRIER MEDIAN (A)

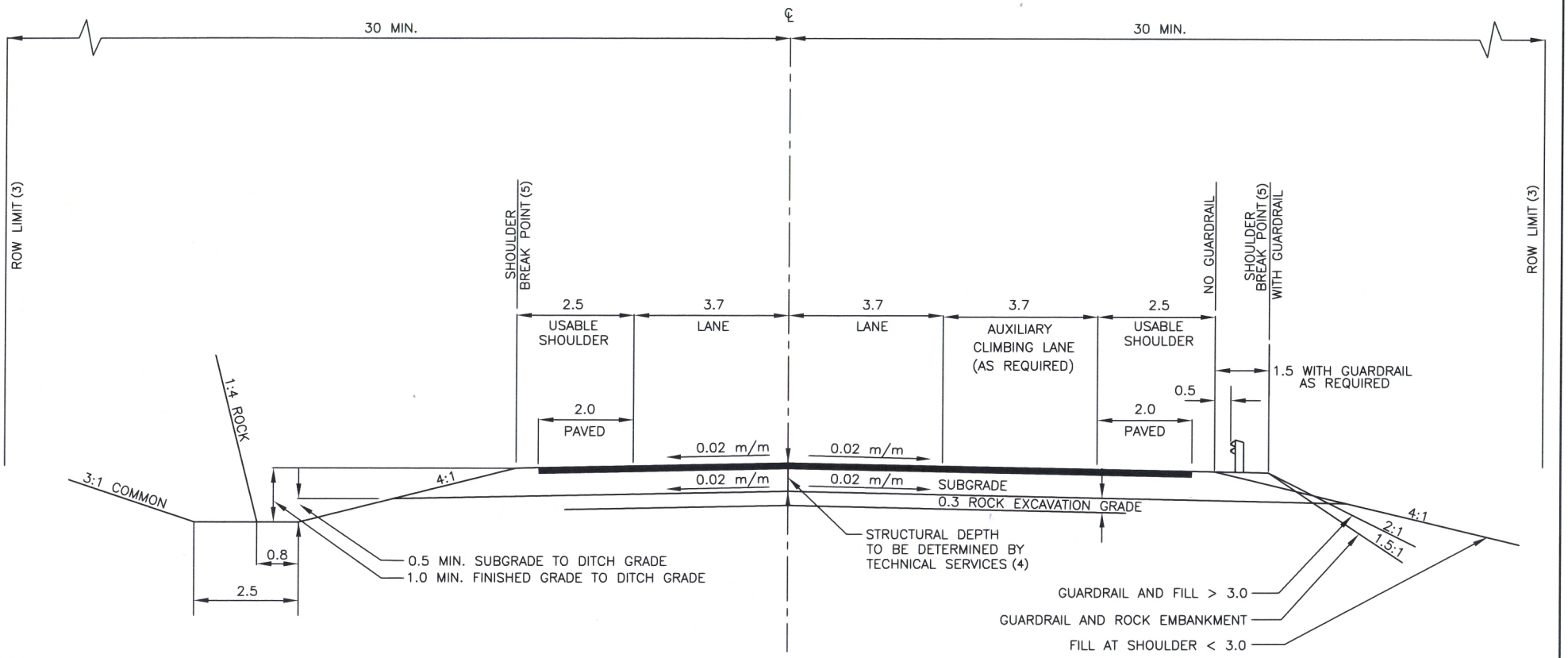

NOTES:
1. ALL DIMENSIONS ARE IN METRES UNLESS OTHERWISE NOTED.
2. DIMENSIONS ARE MEASURED PERPENDICULAR TO CENTERLINE.
3. TO BE ADJUSTED TO ALLOW FOR MINIMUM OF 5.0m BEYOND DAYLIGHT LOCATION OR EXCEPTIONALLY 3.0m MAY BE ACCEPTABLE.
4. THE SUBGRADE WIDTH IS DEPENDENT UPON THE DEPTH OF STRUCTURAL MATERIAL.
5. 0.8m ROUNDING CENTERED ON SHOULDER BREAK POINT IF GUARDRAIL NOT INSTALLED.

NOVA SCOTIA
Transportation and Infrastructure Renewal

No.	REVISION

Scale :	N.T.S.
Drawn by :	G.WRIGHT
Checked by :	K.BODDY
Date of Plan :	NOV–2015
File No. :	S–2015–006

Manager Highway Planning and Design

Director Highway Engineering Services

Executive Director Highway Engineering and Construction

STANDARD CROSS SECTION MAJOR ARTERIAL (B)

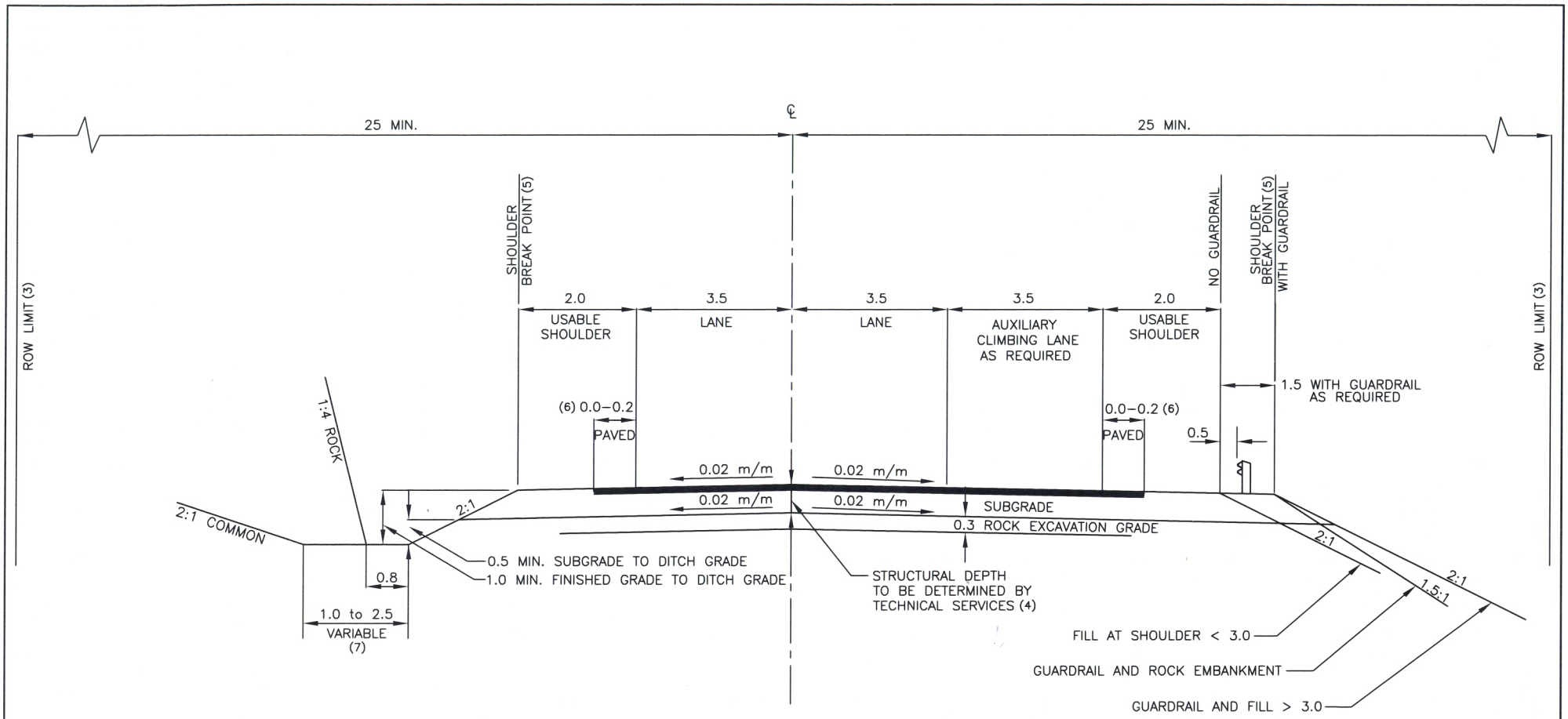

NOTES:
1. ALL DIMENSIONS ARE IN METRES UNLESS OTHERWISE NOTED.
2. DIMENSIONS ARE MEASURED PERPENDICULAR TO CENTERLINE.
3. TO BE ADJUSTED TO ALLOW FOR MINIMUM OF 5.0m BEYOND DAYLIGHT LOCATION OR EXCEPTIONALLY 3.0m MAY BE ACCEPTABLE.
4. THE SUBGRADE WIDTH IS DEPENDENT UPON THE DEPTH OF STRUCTURAL MATERIAL.
5. 0.4m ROUNDING CENTERED ON SHOULDER BREAK POINT IF GUARDRAIL NOT INSTALLED.
6. 0.0m PAVED SHOULDER TYPE FOR AADT < 5000; 0.2m PAVED SHOULDER TYPE FOR AADT > 5000.
7. DITCH WIDTH TO BE BASED ON HYDRAULIC PERFORMANCE.

NOVA SCOTIA
Transportation and Infrastructure Renewal

No.	REVISION

Scale : N.T.S.
Drawn by : G.WRIGHT
Checked by : K.BODDY
Date of Plan : NOV–2015
File No. : S–2015–007

Manager Highway Planning and Design

Director Highway Engineering Services

Executive Director Highway Engineering and Construction

STANDARD CROSS SECTION MAJOR COLLECTOR (E)

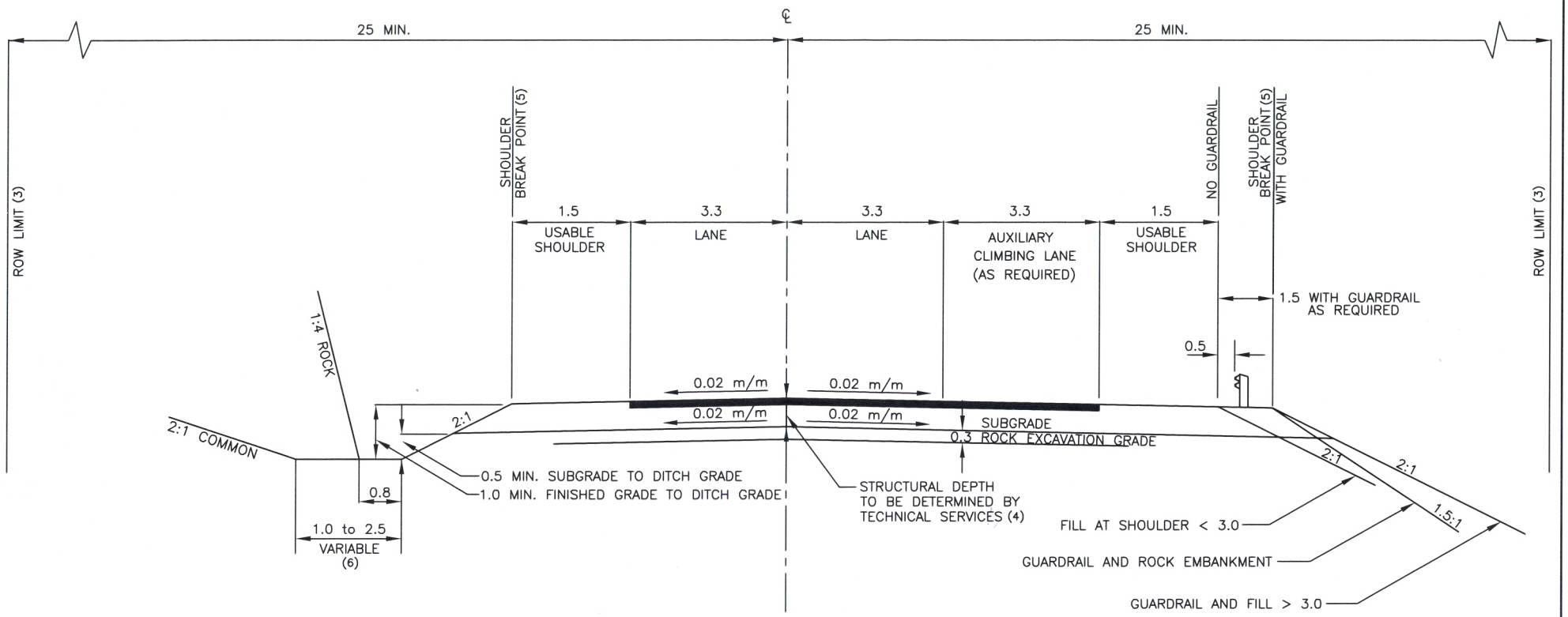

NOTES:
1. ALL DIMENSIONS ARE IN METRES UNLESS OTHERWISE NOTED.
2. DIMENSIONS ARE MEASURED PERPENDICULAR TO CENTERLINE.
3. TO BE ADJUSTED TO ALLOW FOR MINIMUM OF 5.0m BEYOND DAYLIGHT LOCATION OR EXCEPTIONALLY 3.0m MAY BE ACCEPTABLE.
4. THE SUBGRADE WIDTH IS DEPENDENT UPON THE DEPTH OF STRUCTURAL MATERIAL.
5. 0.4m ROUNDING CENTERED ON SHOULDER BREAK POINT IF GUARDRAIL NOT INSTALLED.
6. DITCH WIDTH TO BE BASED ON HYDRAULIC PERFORMANCE.

NOVA SCOTIA
Transportation and Infrastructure Renewal

No.	REVISION

Scale :	N.T.S.
Drawn by :	G.WRIGHT
Checked by :	K.BODDY
Date of Plan :	NOV–2015
File No. :	S–2015–008

Manager Highway Planning and Design

Director Highway Engineering Services

Executive Director Highway Engineering and Construction

STANDARD CROSS SECTION MINOR COLLECTOR (F)

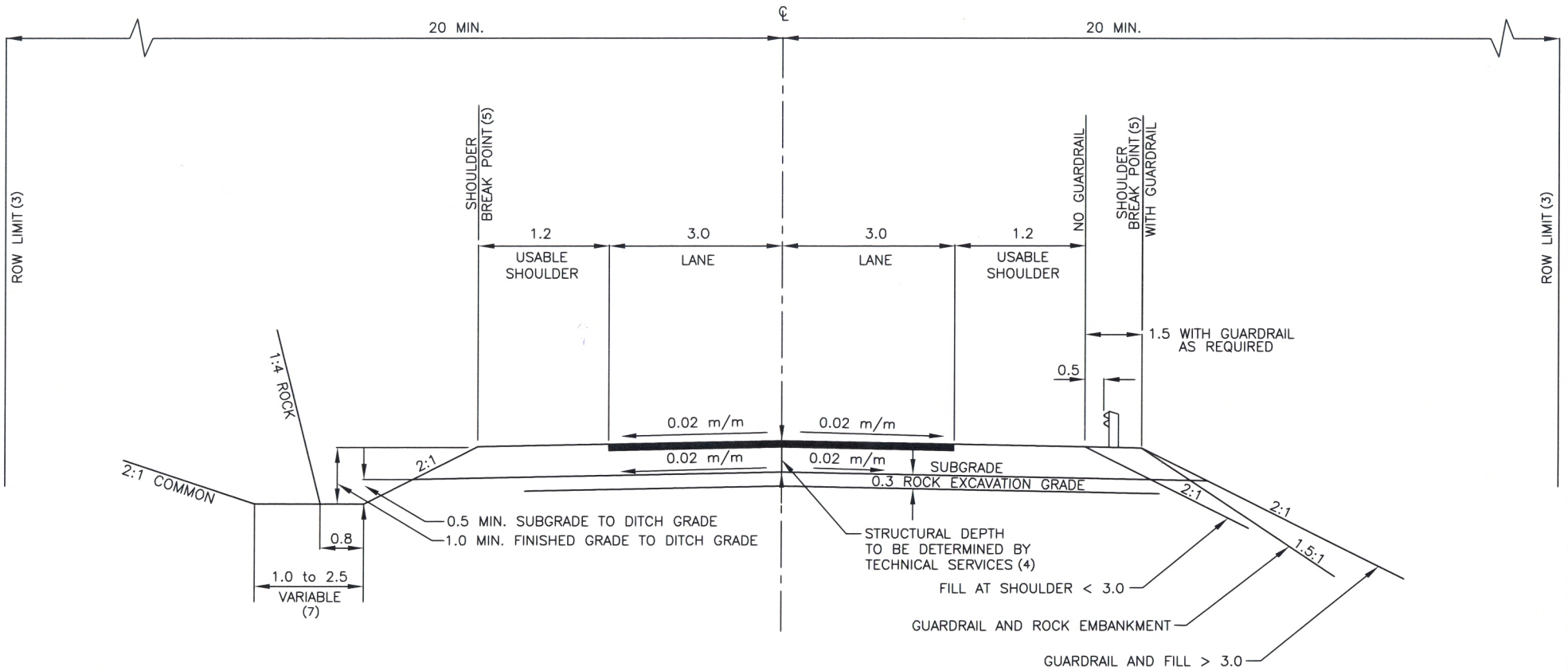

NOTES:
1. ALL DIMENSIONS ARE IN METRES UNLESS OTHERWISE NOTED.
2. DIMENSIONS ARE MEASURED PERPENDICULAR TO CENTERLINE.
3. TO BE ADJUSTED TO ALLOW FOR MINIMUM OF 5.0m BEYOND DAYLIGHT LOCATION OR EXCEPTIONALLY 3.0m MAY BE ACCEPTABLE.
4. THE SUBGRADE WIDTH IS DEPENDENT UPON THE DEPTH OF STRUCTURAL MATERIAL.
5. 0.4m ROUNDING CENTERED ON SHOULDER BREAK POINT IF GUARDRAIL NOT INSTALLED.
6. RIDING SURFACE: PAVED OR UNPAVED.
7. DITCH WIDTH TO BE BASED ON HYDRAULIC PERFORMANCE.

NOVA SCOTIA
Transportation and Infrastructure Renewal

No.	REVISION

Scale :	N.T.S.
Drawn by :	G.WRIGHT
Checked by :	K.BODDY
Date of Plan :	NOV–2015
File No. :	S–2015–009

Manager Highway Planning and Design

Director Highway Engineering Services

Executive Director Highway Engineering and Construction

STANDARD CROSS SECTION LOCAL TYPE (G)

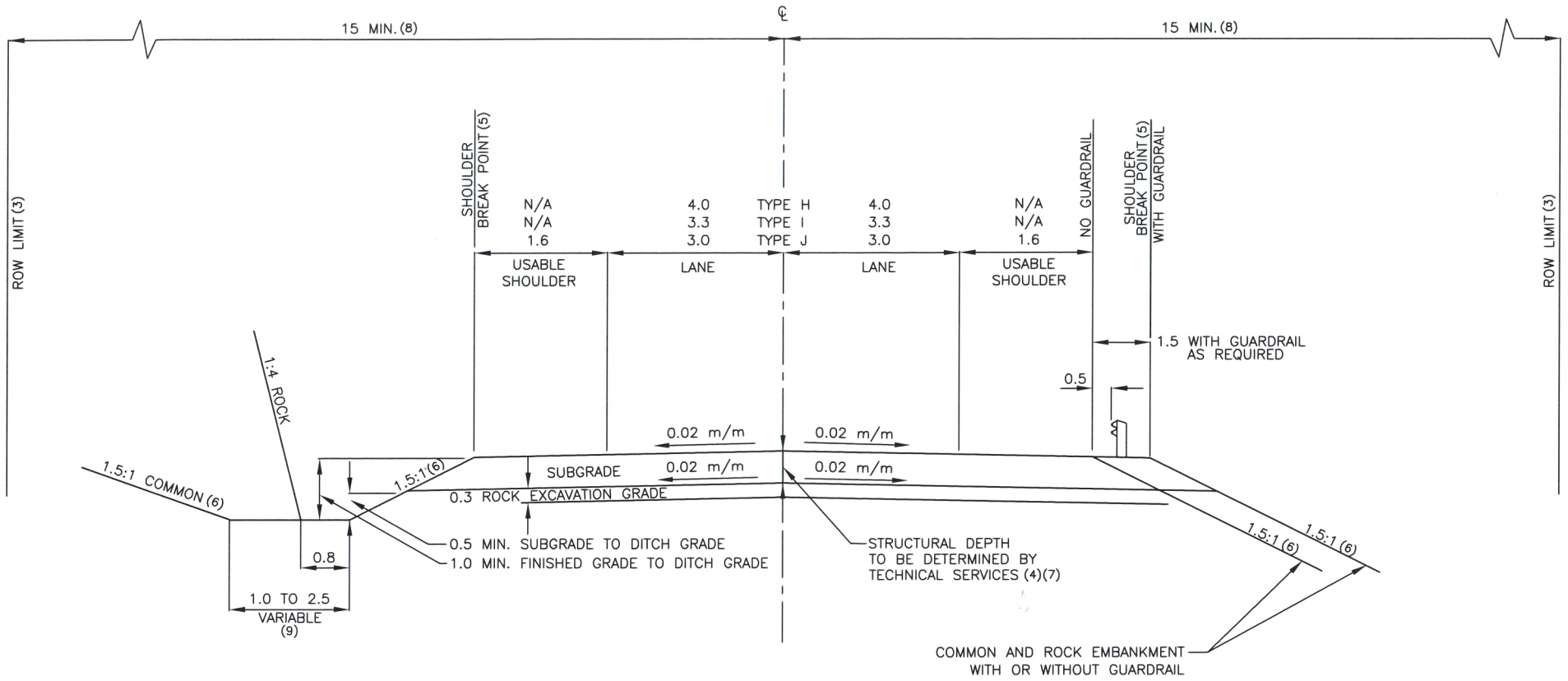

NOTES:
1. ALL DIMENSIONS ARE IN METRES UNLESS OTHERWISE NOTED.
2. DIMENSIONS ARE MEASURED PERPENDICULAR TO CENTERLINE.
3. TO BE ADJUSTED TO ALLOW FOR MINIMUM OF 5.0m BEYOND DAYLIGHT LOCATION OR EXCEPTIONALLY 3.0m MAY BE ACCEPTABLE.
4. THE SUBGRADE WIDTH IS DEPENDENT UPON THE DEPTH OF STRUCTURAL MATERIAL.
5. 0.4m ROUNDING CENTERED ON SHOULDER BREAK POINT IF GUARDRAIL NOT INSTALLED.
6. MAXIMUM FOR TYPE (H) AND (I); MAXIMUM 2:1 FOR TYPE (J).
7. RIDING SURFACE: UNPAVED TYPE (H) AND (I); PAVED OR UNPAVED TYPE (J).
8. 20 MINIMUM FOR TYPE (J).
9. DITCH WIDTH TO BE BASED ON HYDRAULIC PERFORMANCE.

Manager Highway Planning and Design

Director Highway Engineering Services

Executive Director Highway Engineering and Construction

NOVA SCOTIA
Transportation and Infrastructure Renewal

No.	REVISION

Scale : N.T.S.
Drawn by : G.WRIGHT
Checked by : K.BODDY
Date of Plan : NOV–2015
File No. : S–2015–010

STANDARD CROSS SECTION LOCAL TYPE (H) (I) (J)

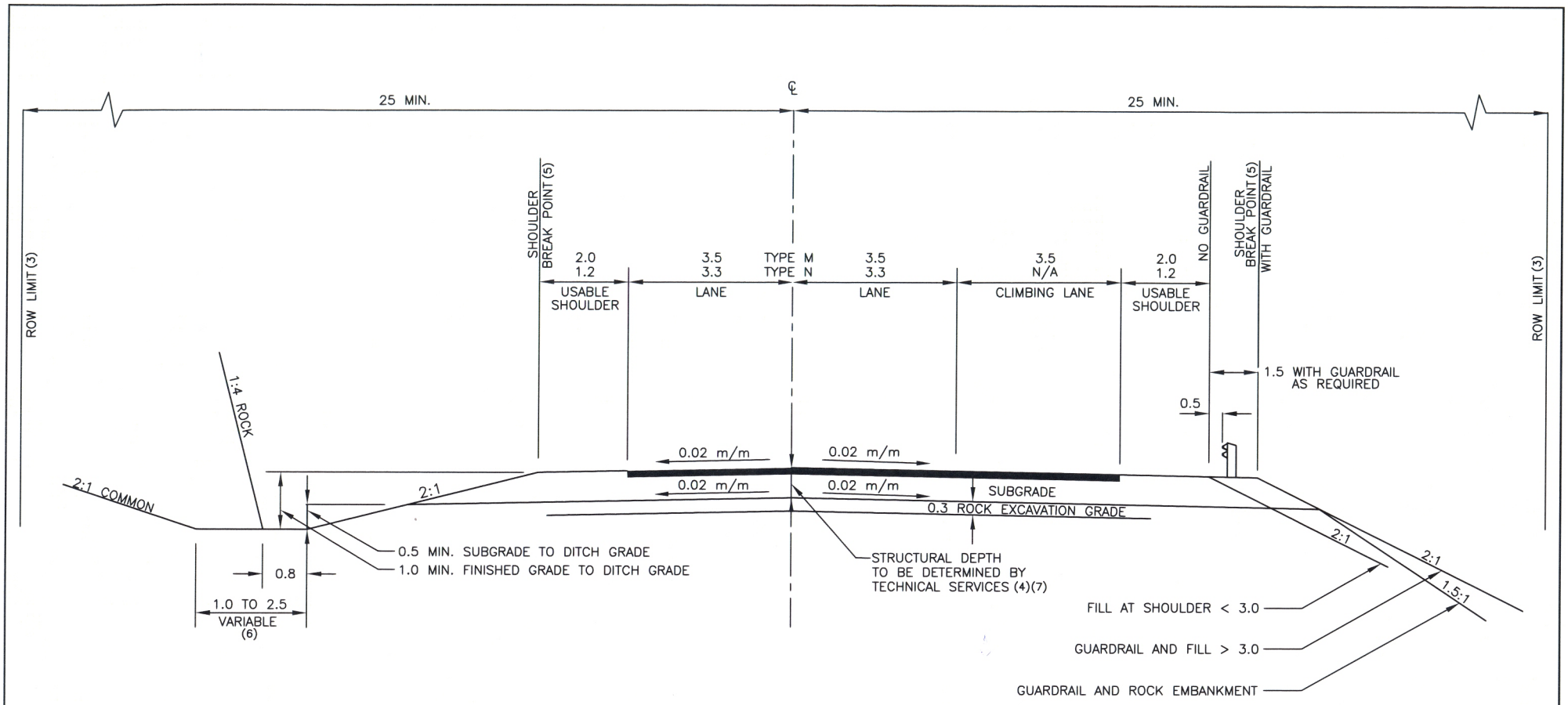

NOTES:
1. ALL DIMENSIONS ARE IN METRES UNLESS OTHERWISE NOTED.
2. DIMENSIONS ARE MEASURED PERPENDICULAR TO CENTERLINE.
3. TO BE ADJUSTED TO ALLOW FOR MINIMUM OF 5.0m BEYOND DAYLIGHT LOCATION OR EXCEPTIONALLY 3.0m MAY BE ACCEPTABLE.
4. THE SUBGRADE WIDTH IS DEPENDENT UPON THE DEPTH OF STRUCTURAL MATERIAL.
5. 0.6m ROUNDING FOR TYPE (M); 0.4m ROUNDING FOR TYPE (N) CENTERED ON SHOULDER BREAK POINT IF GUARDRAIL NOT INSTALLED.
6. DITCH WIDTH TO BE BASED ON HYDRAULIC PERFORMANCE.
7. RIDING SURFACE: PAVED TYPE (M); PAVED OR UNPAVED TYPE (N).

NOVA SCOTIA
Transportation and Infrastructure Renewal

No.	REVISION

Scale : N.T.S.
Drawn by : G.WRIGHT
Checked by : K.BODDY
Date of Plan : NOV–2015
File No. : S–2015–011

Manager Highway Planning and Design

Director Highway Engineering Services

Executive Director Highway Engineering and Construction

STANDARD CROSS SECTION TRUCK ROUTE TYPE (M) (N)

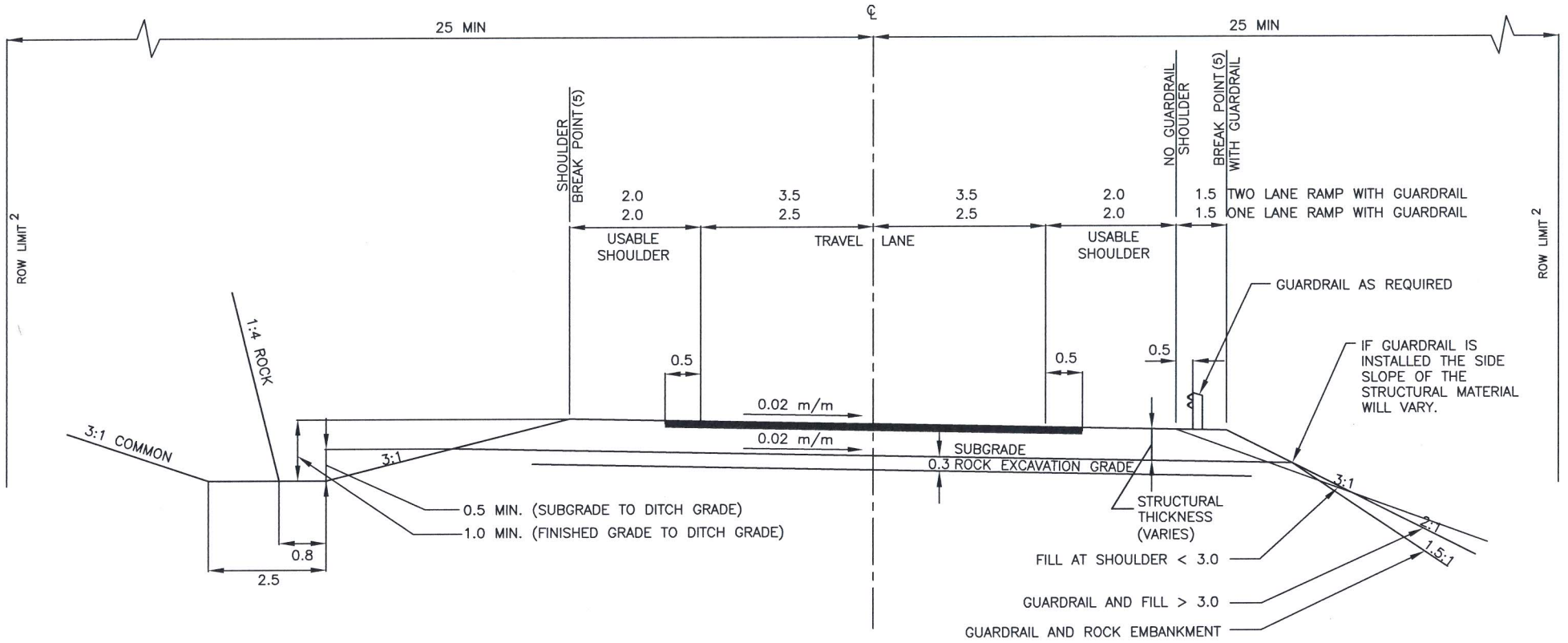

NOTES:
1. ALL DIMENSIONS ARE IN METRES UNLESS OTHERWISE NOTED.
2. DIMENSIONS ARE MEASURED PERPENDICULAR TO CENTERLINE.
3. TO BE ADJUSTED TO ALLOW FOR MINIMUM OF 5.0m BEYOND DAYLIGHT LOCATION OR EXCEPTIONALLY 3.0m MAY BE ACCEPTABLE.
4. THE SUBGRADE WIDTH IS DEPENDENT UPON THE DEPTH OF STRUCTURAL MATERIAL.
5. 0.8m ROUNDING CENTERED ON SHOULDER BREAK POINT IF GUARDRAIL NOT INSTALLED.

Manager Highway Planning and Design

Director Highway Engineering Services

Executive Director Highway Engineering and Construction

NOVA SCOTIA
Transportation and Infrastructure Renewal

No.	REVISION

Scale : N.T.S.
Drawn by : M.ZHANG–HE
Checked by : K.BODDY
Date of Plan : DEC2015
File No. : S–2015–012

STANDARD CROSS SECTION RAMP

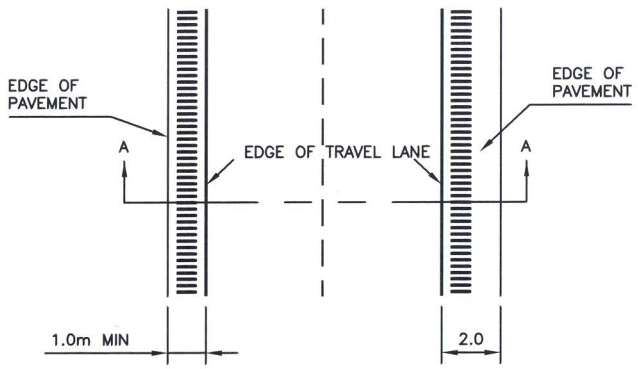

PLAN

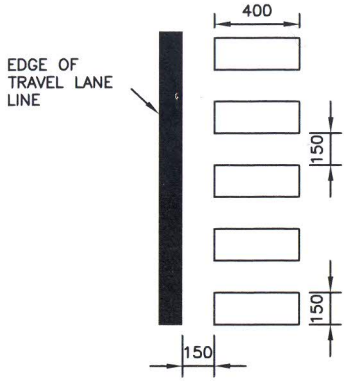

DETAIL

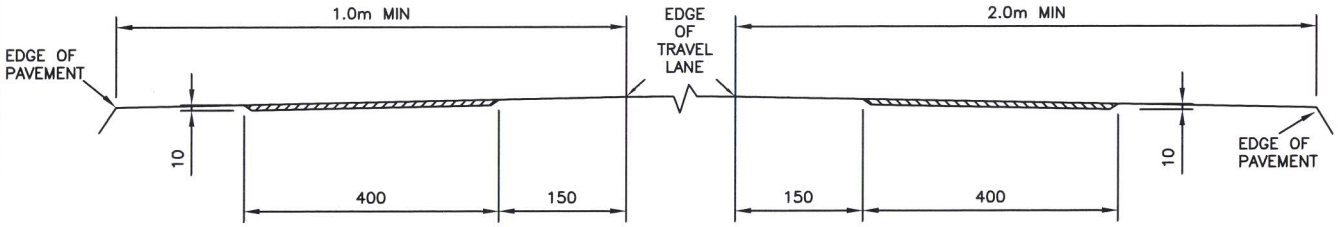

MEDIAN SHOULDER OUTSIDE SHOULDER

SECTION A–A

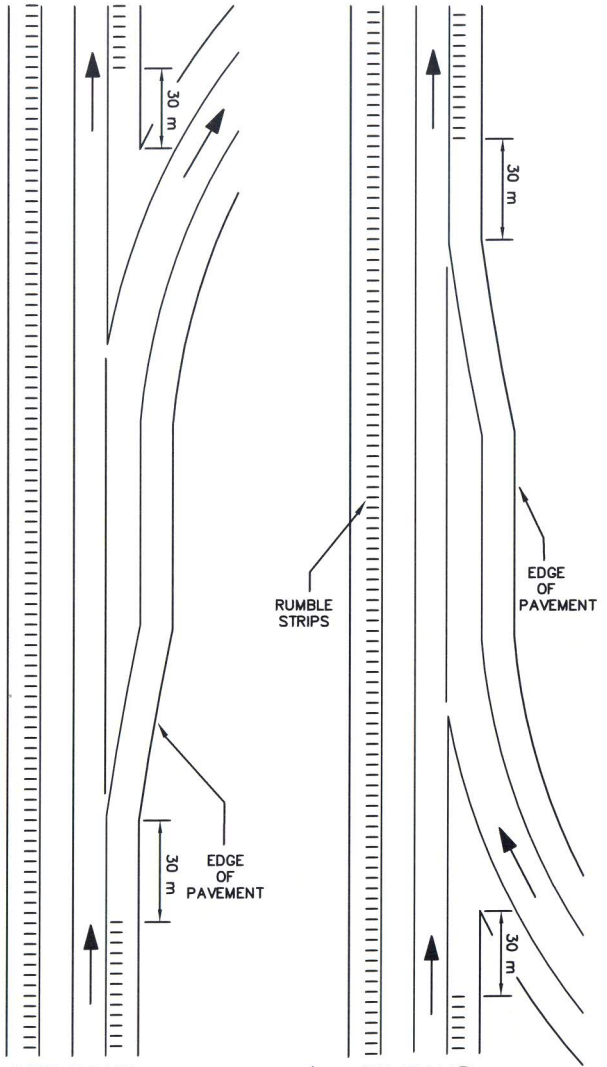

OFF RAMP ON RAMP

NOTES:

1. RUMBLE STRIPS INSTALLED ON 100 SERIES HIGHWAYS WHERE POSTED SPEED > 70 KM/H
2. RUMBLE STRIPS WILL TERMINATE 30 METRES PRIOR TO A BRIDGE AND RESUME 30 METRES AFTER A BRIDGE.
3. RUMBLE STRIPS ARE TO BE TERMINATED 30 METRES PRIOR TO THE START OF A TAPER AND RESUME 30 METRES FROM THE END OF A TAPER. THEY ARE TO BE CONTINUED THROUGH MEDIAN CROSSOVER ACCESSES.
4. ALTHOUGH THE PREFERRED WIDTH OF A RUMBLE STRIP IS 400MM, A WIDTH OF 300MM MAY BE ACCEPTABLE IN SOME CIRCUMSTANCES.
5. RUMBLE STRIPS ARE NOT TO BE USED WHEN PAVED OUTSIDE SHOULDER WIDTH < 2.0 METRE OR THE MEDIAN SHOULDER WIDTH IS < 1.0 METRE.
6. ALL DIMENSIONS ARE IN MILLIMETERES UNLESS OTHERWISE NOTED.
7. RUMBLE STRIPS MAY BE INSTALLED 300mm FROM EDGE OF TRAVEL LANE IN RESIDENTIAL AREAS.

NOVA SCOTIA
Transportation and Infrastructure Renewal

No.	REVISION
3	SHOULDER WIDTH ADJUSTED NOV 2015
2	CHANGED WORDING IN NOTES–NOV 2014
1	NOTES REVISED, TITLE CHANGED OCT 13

Scale : N.T.S.
Drawn by : C.DOYLE
Checked by : P.SMITH
Date of Plan : NOV–2015
File No. : S–2015–042

Manager Traffic Engineering and Road Safety — Nov 17/15

Director Highway Engineering Services — 4Dec/15

Executive Director Highway Engineering and Construction — Dec 8/15

APPENDIX "B"
CONTINUOUS SHOULDER RUMBLE STRIPS

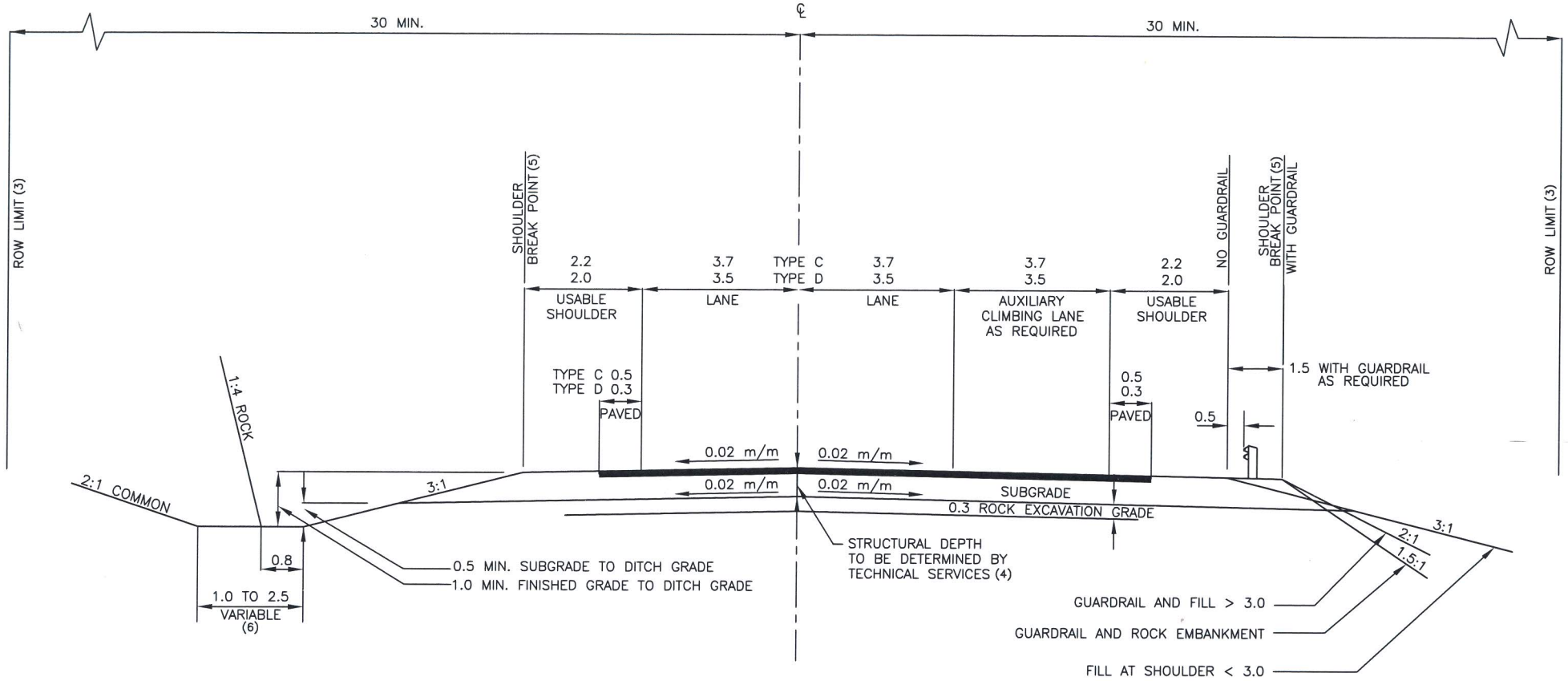

NOTES:
1. ALL DIMENSIONS ARE IN METRES UNLESS OTHERWISE NOTED.
2. DIMENSIONS ARE MEASURED PERPENDICULAR TO CENTERLINE.
3. TO BE ADJUSTED TO ALLOW FOR MINIMUM OF 5.0m BEYOND DAYLIGHT LOCATION OR EXCEPTIONALLY 3.0m MAY BE ACCEPTABLE.
4. THE SUBGRADE WIDTH IS DEPENDENT UPON THE DEPTH OF STRUCTURAL MATERIAL.
5. 0.6m ROUNDING CENTERED ON SHOULDER BREAK POINT IF GUARDRAIL NOT INSTALLED.
6. DITCH WIDTH TO BE BASED ON HYDRAULIC CAPACITY.
7. A WIDER PAVED SHOULDER WILL BE REQUIRED IF RUMBLE STRIPS ARE BEING USED – REFER TO P01055

Manager Highway Planning and Design

Director Highway Engineering Services

Executive Director Highway Engineering and Construction

NOVA SCOTIA
Transportation and Infrastructure Renewal

No.	REVISION

Scale : N.T.S.
Drawn by : G.WRIGHT
Checked by : K.BODDY
Date of Plan : NOV–2015
File No. : S–2015–043

STANDARD CROSS SECTION MINOR ARTERIAL TYPE (C) (D)

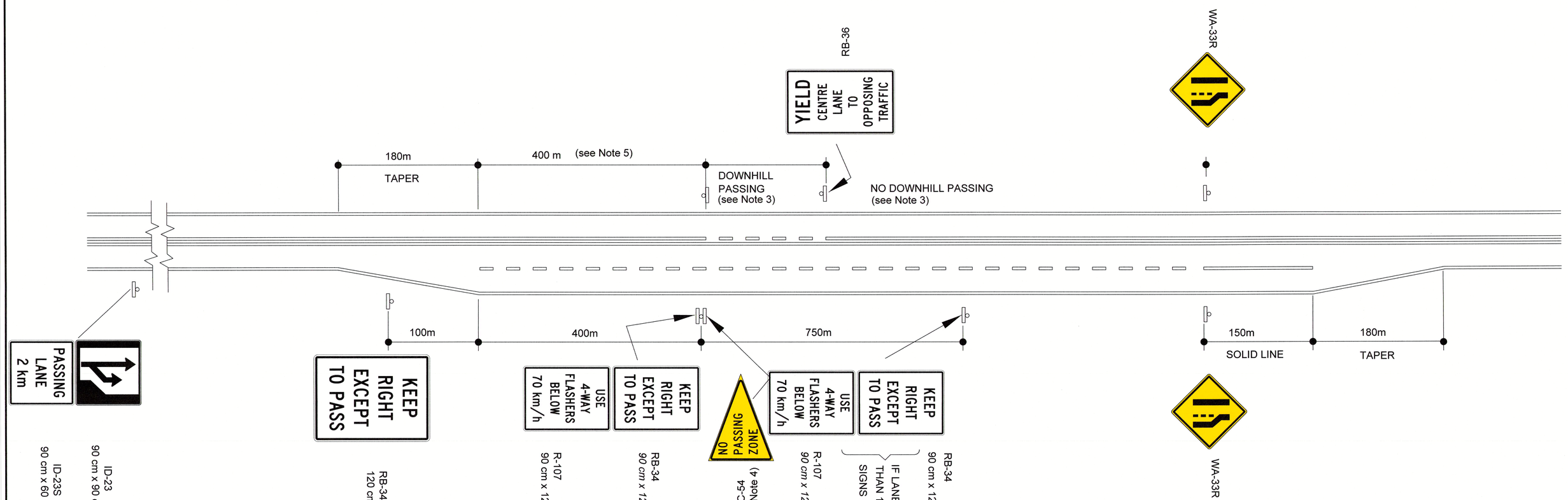

Notes

1. Do not mark downhill passing on highways where the AADT is greater than 4,000 vpd.
2. Where traffic volumes are 4,000 vpd or less and adequate sight distance exists, downhill passing zones may be established using a design speed that is 10 km/h higher than the posted speed.
3. Where Passing Zones or No Passing Zones are established, they must be a minimum of 200 m long.
4. Erect "No Passing" pennant signs facing downhill traffic.
5. A no passing zone with a minimum length of 400 m must be established at the beginning of the climbing lane.
6. The Traffic Authority may substitute the RB-34 at the start of the climbing lane with an optional ID-23/ID-23S-1 sign combination to display the total length of the climbing lane, particularly for climbing lanes less than 1 km in length.

Designed by:		Manager, Traffic Engineering and Road Safety	Feb 27/19 Date		
Surveyed by:		Director, Highway Engineering Services	Feb 28/19 Date		
Drawn by: R. Hird/A . MacDonald		Executive Director, Highway Engineering and Construction	March 7 2019 Date		
Checked by: P. Hill					
Approved by:				1 March 2016 Proposed "Passing Ends 300m" sign removed - not approved by Chief Engineer	
				MK. DATE REVISION	

NOVA SCOTIA
Transportation and Infrastructure Renewal

Scale: NTS	Signing and Pavement Markings
Date: May 2015	
File No. : S-2015-310	
Sheet No. : 1 of 1	

Typical Climbing Lanes

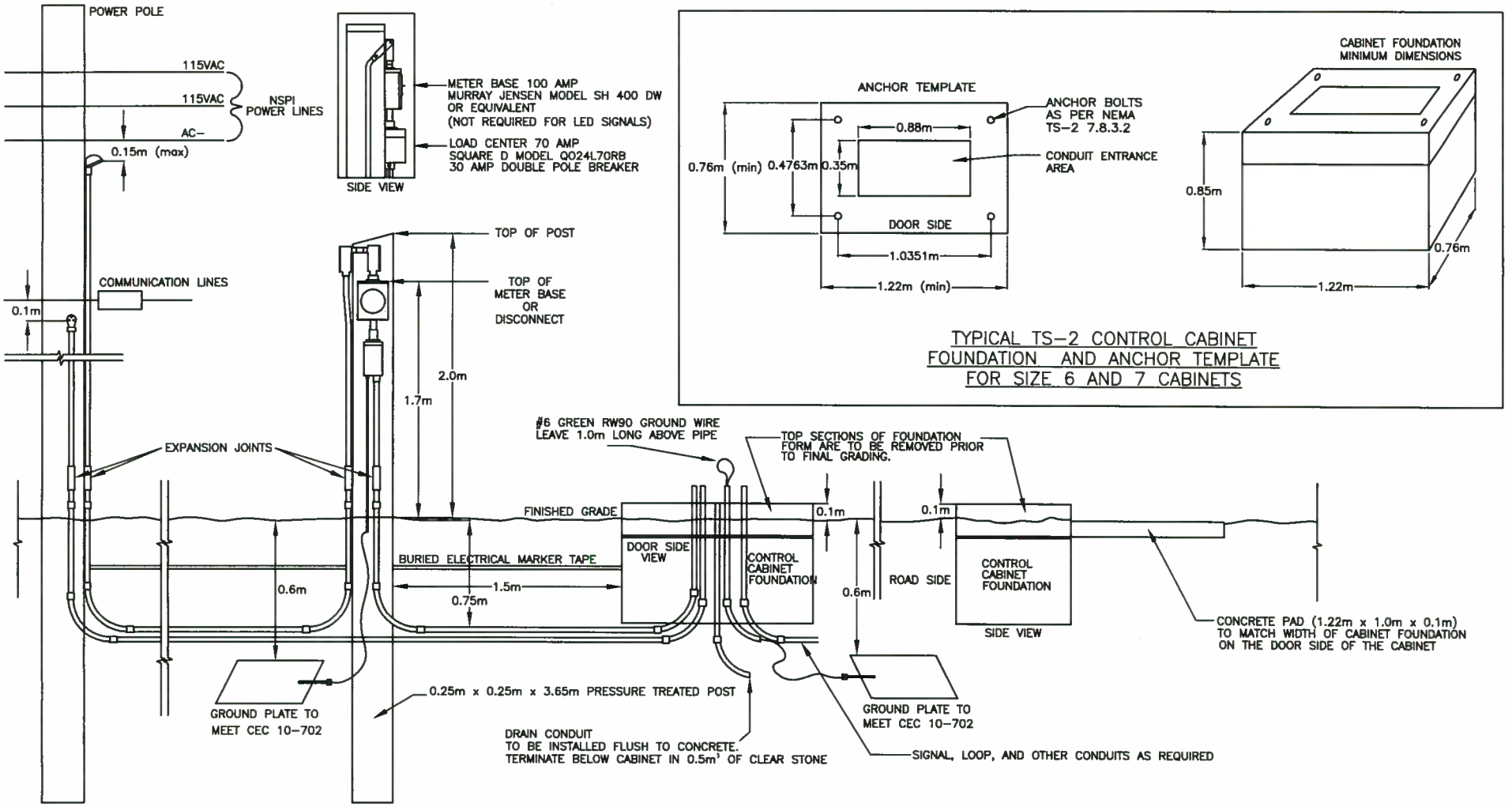

TYPICAL TS–2 CONTROL CABINET FOUNDATION AND ANCHOR TEMPLATE FOR SIZE 6 AND 7 CABINETS

NOTES:

FOUNDATION:
1. FOUNDATION FORM, ANCHOR TEMPLATE AND ANCHOR BOLTS MUST MEET NEMA TS–2 SPECIFICATIONS.
2. GROUT ALL VOIDS TO PROVIDE SMOOTH SURFACE. FINAL SURFACE TO BE LEVEL NS AND EW. IF NOT, GROUT USING M BED, SUPERCRETE OR EQUIVALENT.
3. SURFACE OF PAD AND FOUNDATION TO BE EDGED WITH SIDEWALK EDGER OR AS SHOWN ON PLANS.

PVC:
1. SCHEDULE 40 TO CSA22.2 No. 211.2
2. ALL UNUSED RUNS OF PVC ARE TO HAVE 6mm POLY ROPE PULLED THROUGH AND SECURED AT EACH END TO PREVENT PULL BACK.
3. ALL PVC JOINTS MUST BE CLEANED (PVC CLEANER, WIPED DRY, etc.) AND CEMENTED USING PVC CEMENT.
4. ALL FOUNDATION PVC TO EXTEND 75mm ABOVE FINISHED SURFACE.
5. END CAP ALL PVC.
6. SEE TRENCH DETAIL FOR PROPER CONDUIT INSTALLATION Dwg.# S–2011–094.

ROPE:
1. 6mm POLYPROPELENE.
2. EACH PULL OF ROPE IS TO BE A CONTINUOUS LENGTH. DO NOT JOIN LENGTHS UNLESS IT IN A JUNCTION BOX.

CONCRETE:
TIR STANDARD SPECIFICATION DIVISION 5 SECTION 7:
1. 35 MPa
2. 6% AIR ENTRAINMENT.
3. 80mm SLUMP.

Manager Traffic Engineering and Road Safety

Director Road Safety

Executive Director Highway Engineering and Construction

NOVA SCOTIA
Transportation and Infrastructure Renewal

No.	REVISION
1	TEXT CORRECTIONS

Scale :	N.T.S.
Drawn by :	P.HILL/L.MACLEAN
Checked by :	P.HILL
Date of Plan :	APR2016
File No. :	S–2016–092

CONTROLLER FOUNDATION AND ELECTRICAL SERVICE DETAIL - TRAFFIC SIGNALS

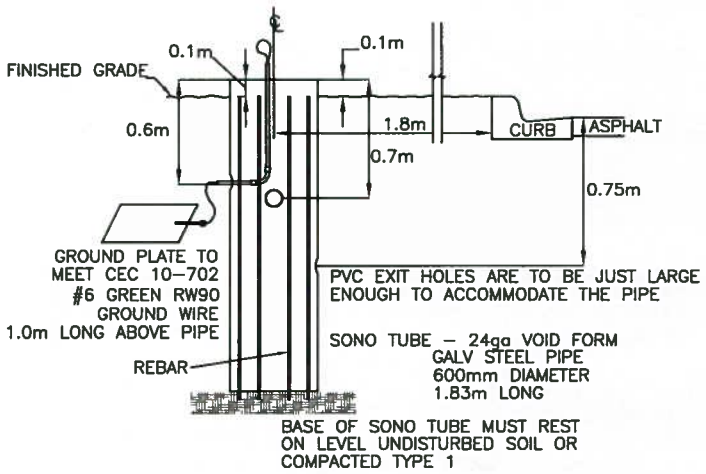

TYPE A CURBED ROAD OR ISLAND

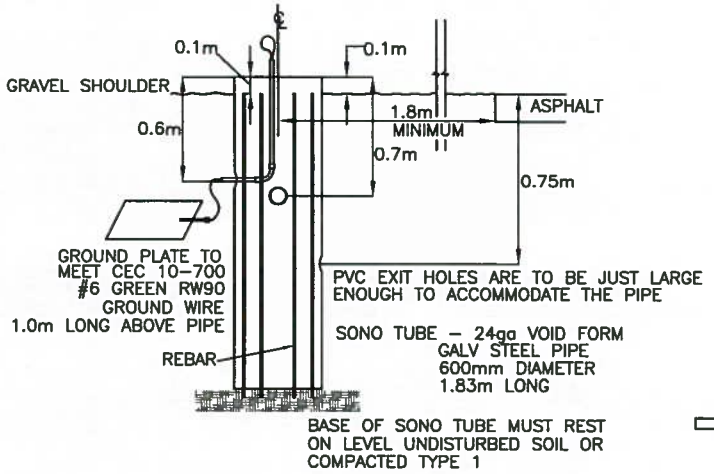

TYPE B NO CURB

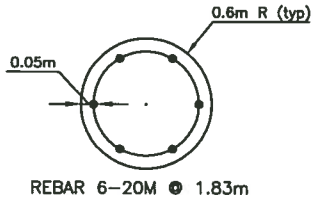

REBAR 6–20M @ 1.83m
HORIZONTAL REINFORCING TIES 1–10M AT 300 C–C

REBAR LAYOUT DETAIL

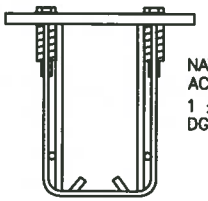

NATIONAL CONCRETE ACCESSORIES
ACROW–RICHMOND
1 ¼" DIA. PRESET ANCHOR TYPE
DGR–2 – 368MM BOLT CENTER DIA.

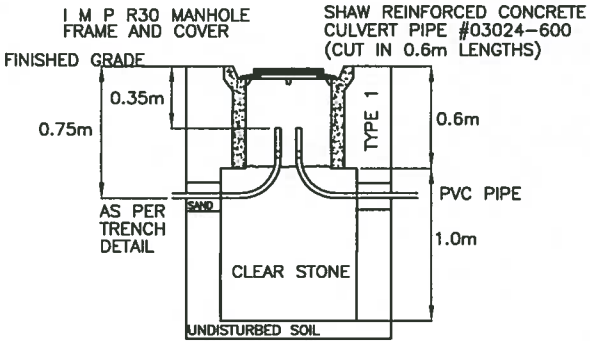

PULL PIT

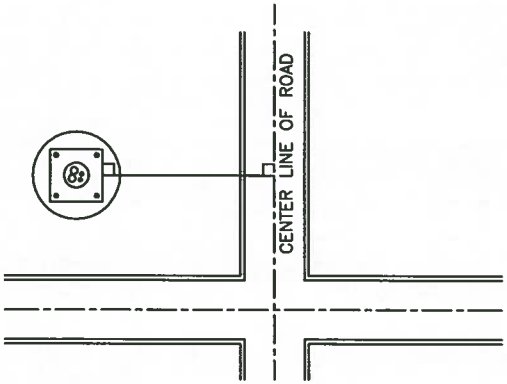

ANCHOR ORIENTATION

ANCHOR NOTES:
1. ALIGNMENT ERROR OF GREATER THAN 5 DEGREES WILL NECESSITATE THE REPLACEMENT OF THE CONCRETE BASE. SIGNAL EQUIPMENT IS PREMANUFACTURED BASED ON A 5 DEGREE ERROR TOLERANCE.
2. ANCHOR ALIGNMENT IS ACHIEVED BY STANDING BEHIND THE SIGNAL POLE BASE LOOKING TO THE CENTRE OF THE INTERSECTION. THE ANCHOR IS ALIGNED PARALLEL TO THE CENTRE LINE OF THE ROAD ON THE IMMEDIATE LEFT.
3. HOLE DIAMETER IN ANCHOR PLATE MUST NOT BE ALTERED. HOLE SIZE IS MAXIMUM ALLOWABLE FOR POLE IN USE.
4. ANCHOR PLATE MUST BE LEVEL BOTH NORTH, SOUTH AND EAST, WEST. BOTTOM OF ANCHOR PLATE MUST BE FLUSH WITH TOP OF CONCRETE AND IN THE CENTRE OF THE BASE. DO NOT PUSH INTO CONCRETE.
5. PRIOR TO CONCRETE SET, REMOVE BOLT TEMPLATE AND FINISH SURFACE TO A SMOOTH UNIFORM FINISH, FREE OF OPEN TEXTURING AND EXPOSED AGGREGATE. REPLACE TEMPLATE AND PLACE BOLTS FULLY INTO THREADED FERRULES (HAND TIGHT). ANCHOR STRUTS MUST BE AT OR BELOW THE SURFACE OF THE CONCRETE.

POLE ANCHOR DETAIL

NOTES:
REBAR:
1. REBAR IS SPACED EQUALLY AROUND THE SONO TUBE AS SHOWN. ENSURE THE ENDS ARE TAPPED DOWN 0.1m BELOW TOP OF SONO TUBE FOR CONCRETE COVERAGE AND ANCHOR CLEARANCE.

COMPACTION:
1. BACKFILL IN 0.3m LIFTS IN ACCORDANCE WITH ELECTRICAL CODE SECTION 12–012 AND TABLE 53. COMPACTION IS TO BE DONE IN SUCCESSIVE LAYERS. COMPACTION IS TO BE DONE UNTIL THERE IS VISIBLE EVIDENCE OF NO FURTHER CONSOLIDATION (98% PROCTOR DENSITY).
2. MAXIMUM SINGLE LIFT IS 0.3m.

CONCRETE:
TIR STANDARD SPECIFICATION DIVISION 5 SECTION 7:
1. 35 MPa
2. 6% AIR ENTRAINMENT.
3. 80mm SLUMP.

Manager Traffic Engineering and Road Safety

Director Road Safety

Executive Director Highway Engineering and Construction

NOVA SCOTIA
Transportation and Infrastructure Renewal

No.	REVISION
1	REVISION TO ANCHOR NOTES

Scale :	N.T.S.
Drawn by :	P.HILL/L.MACLEAN
Checked by :	A.THOMAS
Date of Plan :	APR2016
File No. :	S–2016–093

FOUNDATION AND PULL PIT DETAIL TRAFFIC SIGNALS ALUMINUM POLE

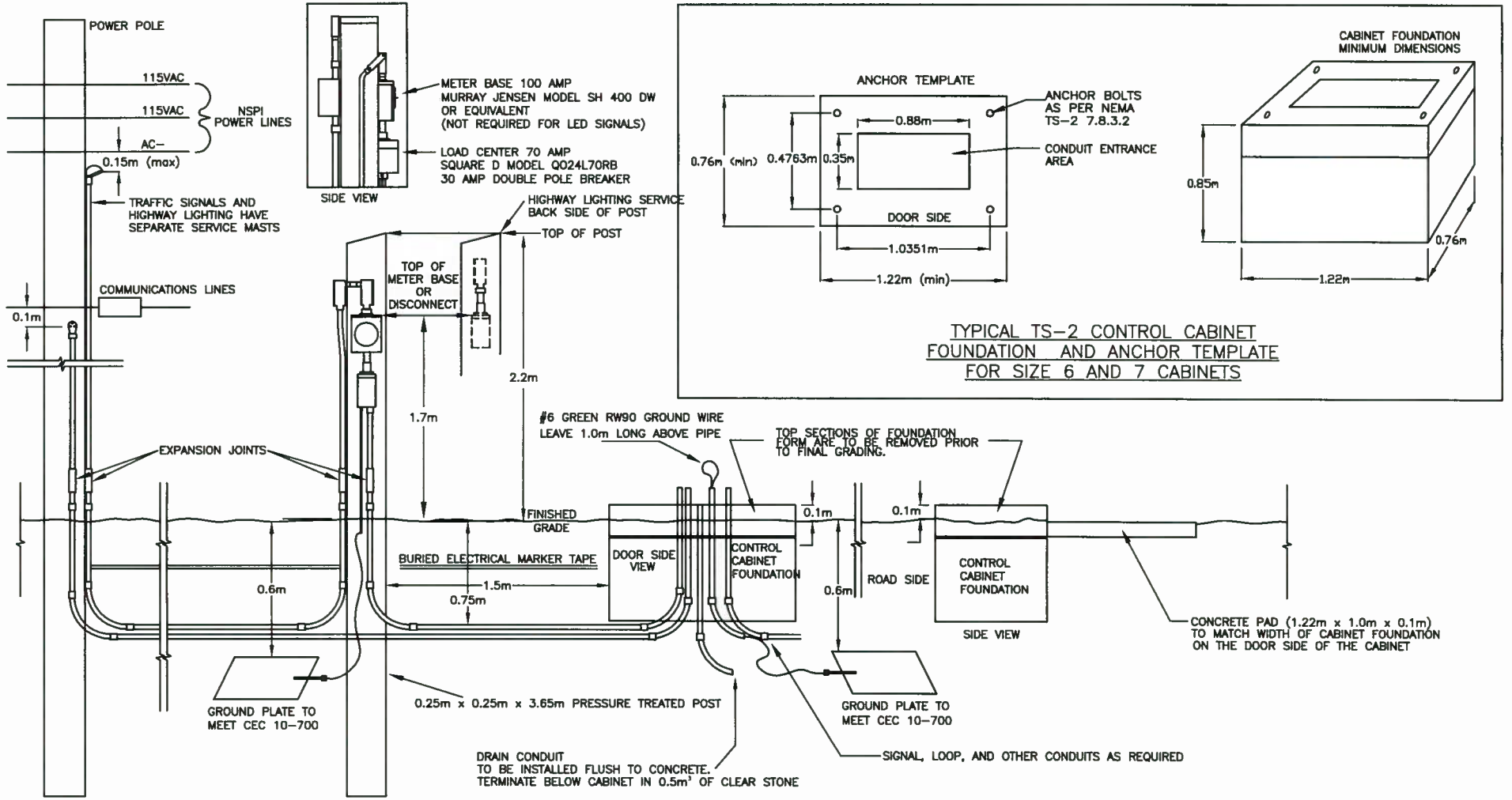

TYPICAL TS–2 CONTROL CABINET FOUNDATION AND ANCHOR TEMPLATE FOR SIZE 6 AND 7 CABINETS

NOTES:

FOUNDATION:
1. FOUNDATION FORM, ANCHOR TEMPLATE AND ANCHOR BOLTS MUST MEET NEMA TS–2 SPECIFICATIONS.
2. GROUT ALL VOIDS TO PROVIDE SMOOTH SURFACE. FINAL SURFACE TO BE LEVEL NS AND EW. IF NOT, GROUT USING M BED, SUPERCRETE OR EQUIVALENT.
3. SURFACE OF PAD AND FOUNDATION TO BE EDGED WITH SIDEWALK EDGER OR AS SHOWN ON PLANS.

PVC:
1. SCHEDULE 40 TO CSA22.2 No. 211.2
2. ALL UNUSED RUNS OF PVC ARE TO HAVE 6mm POLY ROPE PULLED THROUGH AND SECURED AT EACH END TO PREVENT PULL BACK.
3. ALL PVC JOINTS MUST BE CLEANED (PVC CLEANER, WIPED DRY, etc.) AND CEMENTED USING PVC CEMENT.
4. ALL FOUNDATION PVC TO EXTEND 75mm ABOVE FINISHED SURFACE.
5. END CAP ALL EMPTY/UNUSED PVC.
6. SEE TIR TRENCHING DETAILS FOR PROPER CONDUIT INSTALLATION Standard Dwg.# S–2011–094.

ROPE:
1. 6mm POLYPROPELENE.
2. EACH PULL OF ROPE IS TO BE A CONTINUOUS LENGTH. DO NOT JOIN LENGTHS UNLESS IT IS IN A JUNCTION BOX.

CONCRETE:
TIR STANDARD SPECIFICATION DIVISION 5 SECTION 7:
1. 35 MPa
2. 6% AIR ENTRAINMENT.
3. 80mm SLUMP.

NOVA SCOTIA
Transportation and Infrastructure Renewal

No.	REVISION
2	ADDED SERVICE MAST NOTE
1	ADDITIONAL FOUNDATION DETAIL

Scale :	N.T.S.
Drawn by :	P.HILL/L.MACLEAN
Checked by :	A.THOMAS
Date of Plan :	APR2016
File No. :	S–2016–096

Manager Traffic Engineering and Road Safety

Director Road Safety

Executive Director Highway Engineering and Construction

CONTROLLER FOUNDATION AND ELECTRICAL SERVICE DETAIL - TRAFFIC SIGNALS WITH HIGHWAY LIGHTING

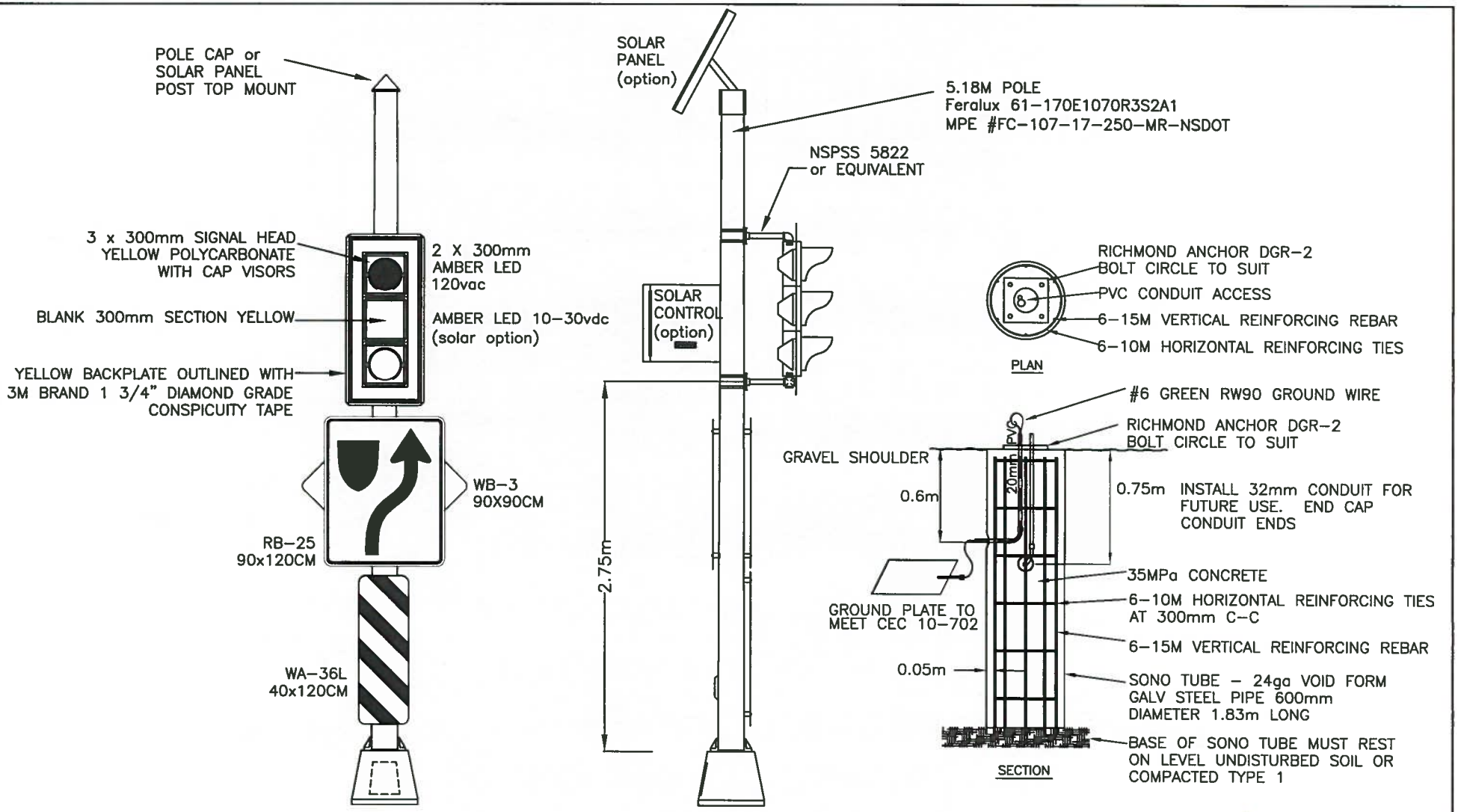

NOTES:
1. LED SIGNALS MUST MEET ITE PERFORMANCE SPECIFICATION FOR VEHICLE CONTROL SIGNAL HEADS 2005 AND BE ETL VERIFIED WHERE POSSIBLE.
2. FLASH RATES SHALL MEET MANUAL OF UNIFORM TRAFFIC CONTROL DEVICES FOR CANADA TABLE B3–2 (50–60FPM)
3. SOLAR POWER SYSTEMS MUST HAVE 10 DAY AUTONOMY.
4. SOLAR SYSTEMS SHALL BE "SOLAR GLOBAL SOLUTIONS" BRAND PART NO. PCSLR190TPMPPTAGM179AHDBL12AM50/50N/AGY
5. ALUMINUM POLE MUST BE MOUNTED ON A 17" ASSHTO CERTIFIED BREAKAWAY TRANSFORMER BASE.

NOVA SCOTIA
Transportation and Infrastructure Renewal

No.	REVISION

Scale :	N.T.S.
Drawn by :	P.HILL
Checked by :	A.THOMAS
Date of Plan :	APR2016
File No. :	S–2016–097

Manager Traffic Engineering and Road Safety

Director Road Safety

Executive Director Highway Engineering and Construction

MEDIAN FLASHING LIGHT BOUNCING BALL

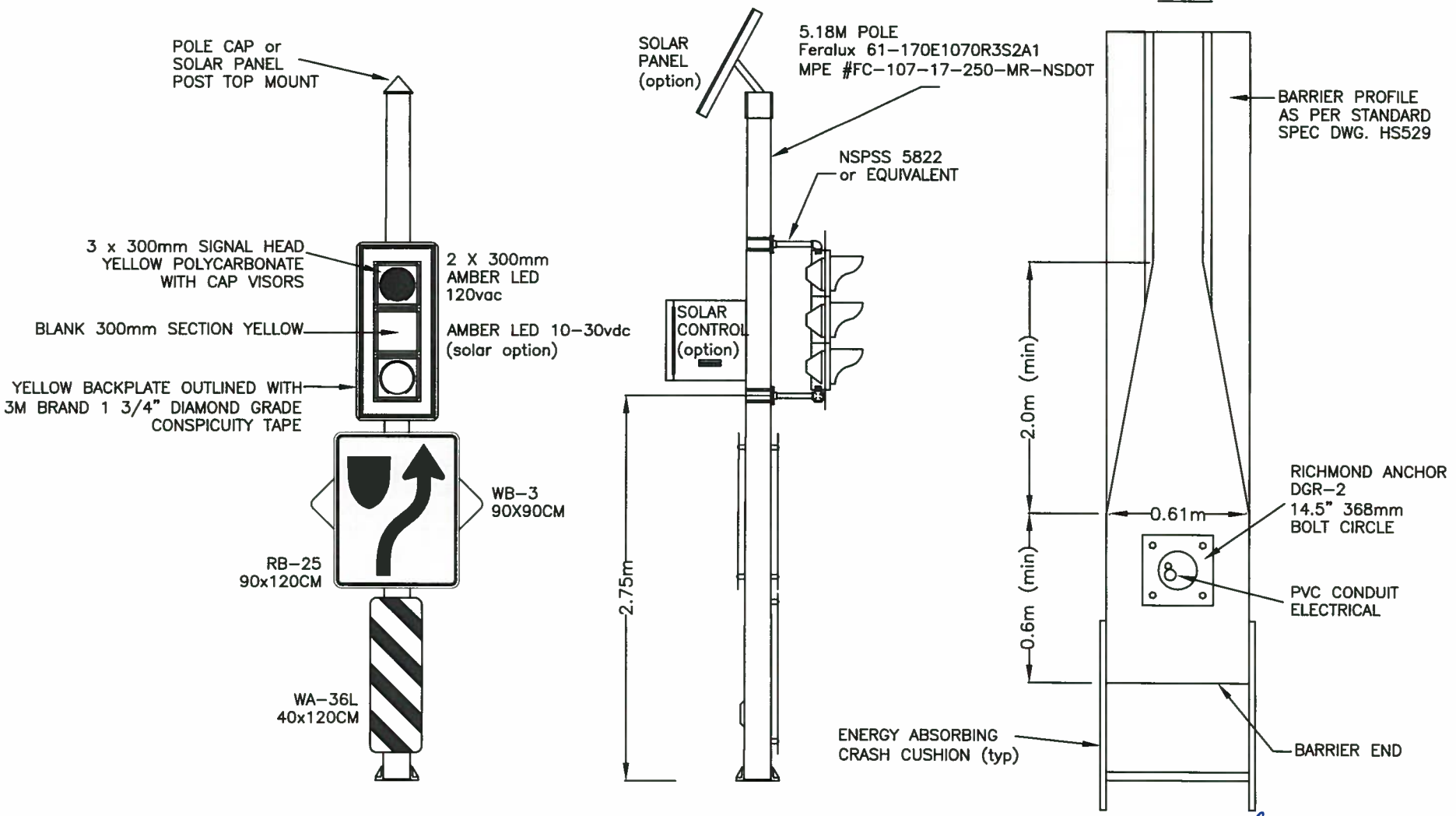

NOTES:
1. LED SIGNALS MUST MEET ITE PERFORMANCE SPECIFICATION FOR VEHICLE CONTROL SIGNAL HEADS 2005 AND BE ETL VERIFIED WHERE POSSIBLE.
2. FLASH RATES SHALL MEET MANUAL OF UNIFORM TRAFFIC CONTROL DEVICES FOR CANADA TABLE B3-2 (50-60FPM)
3. SOLAR POWER SYSTEMS MUST HAVE 10 DAY AUTONOMY.
4. SOLAR SYSTEMS SHALL BE "SOLAR GLOBAL SOLUTIONS" BRAND PART NO. PCSLR190TPMPPTAGM179AHDBL12AM50/50N/AGY

NOVA SCOTIA
Transportation and Infrastructure Renewal

No.	REVISION

Scale :	N.T.S.
Drawn by :	P.HILL
Checked by :	A.THOMAS
Date of Plan :	APR2016
File No. :	S-2016-098

Manager Traffic Engineering and Road Safety

Director Road Safety

Executive Director Highway Engineering and Construction

MEDIAN FLASHING LIGHT ON BARRIER BOUNCING BALL

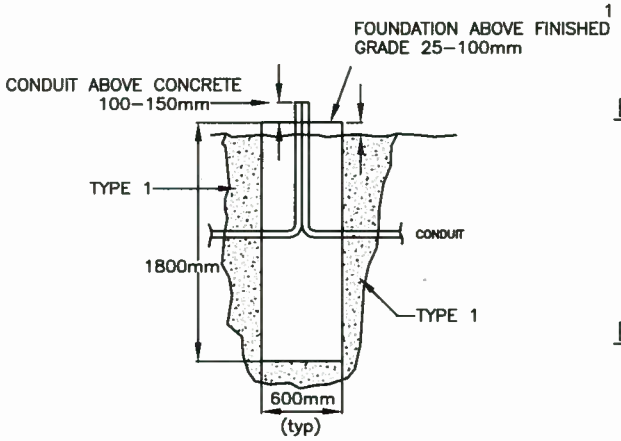

FOUNDATION ELEVATION DETAIL

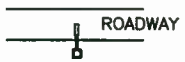

BASE ORIENTATION – FIG.1

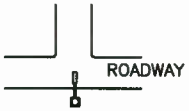

BASE ORIENTATION – FIG.2

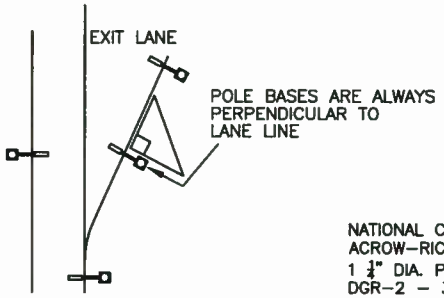

BASE ORIENTATION – FIG.3

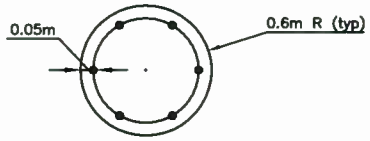

REBAR 6–20M @ 1.83m
HORIZONTAL REINFORCING TIES 1–10M AT 300 C–C

REBAR LAYOUT DETAIL

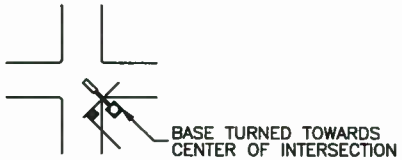

BASE ORIENTATION – FIG.4

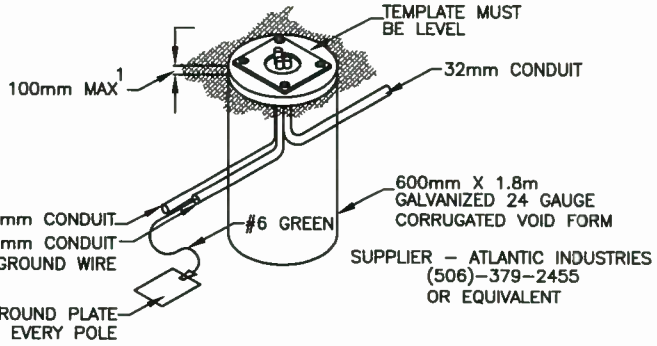

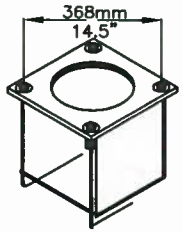

NATIONAL CONCRETE ACCESSORIES
ACROW–RICHMOND
1 ¼" DIA. PRESET ANCHOR TYPE DGR–2 – 368MM BOLT CENTER DIA.

ANCHOR NOTES:
1. ALIGNMENT ERROR OF GREATER THAN 5 DEGREES WILL NECESSITATE THE REPLACEMENT OF THE CONCRETE BASE. SIGNAL EQUIPMENT IS PREMANUFACTURED BASED ON A 5 DEGREE ERROR TOLERANCE.
2. ANCHOR ALIGNMENT SHALL BE BASED ON THE ORIENTATION REQUIREMENTS AS SHOWN IN FIG. 1 THRU 4.
3. HOLE DIAMETER IN ANCHOR PLATE MUST NOT BE ALTERED. HOLE SIZE IS MAXIMUM ALLOWABLE FOR POLE IN USE.
4. ANCHOR PLATE MUST BE LEVEL BOTH NORTH, SOUTH AND EAST, WEST. BOTTOM OF ANCHOR PLATE MUST BE FLUSH WITH TOP OF CONCRETE AND IN THE CENTRE OF THE BASE. DO NOT PUSH INTO CONCRETE.
5. PRIOR TO CONCRETE SET, REMOVE BOLT TEMPLATE AND FINISH SURFACE TO A SMOOTH UNIFORM FINISH, FREE OF OPEN TEXTURING AND EXPOSED AGGREGATE. REPLACE TEMPLATE AND PLACE BOLTS FULLY INTO THREADED FERRULES (HAND TIGHT). ANCHOR STRUTS MUST BE AT OR BELOW THE SURFACE OF THE CONCRETE.

CONDUIT AND ANCHOR DETAIL

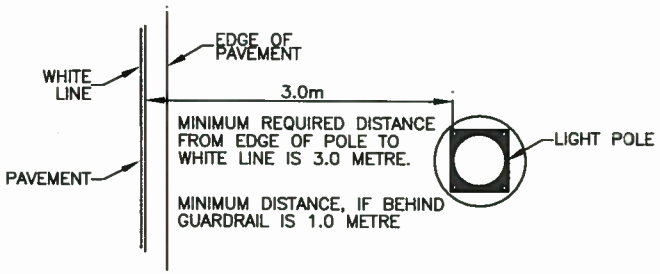

FOUNDATION OFFSET DETAIL

NOTES:
1. ANY FOUNDATION WITH EXPOSURE EXCEEDING 100mm SHALL BE REPLACED.

FOUNDATION FORM
600mm X 1.8m GALVANIZED 24 GAUGE CORRUGATED VOID FORM
SUPPLIER – ATLANTIC INDUSTRIES (506)–379–2455 OR EQUIVALENT

RICHMOND ANCHOR
GALVANIZED CAGE
PART NO. DGR–2: 31.5mm BOLTS AND 368mm BOLT CIRCLE

CONCRETE:
NSTIR STANDARD SPECIFICATION DIVISION 5 SECTION 7
– 35 MPa
– 6% AIR ENTRAINMENT.
– 80mm SLUMP.

Manager Traffic Engineering and Road Safety

Director Road Safety

Executive Director Highway Engineering and Construction

NOVA SCOTIA
Transportation and Infrastructure Renewal

No.	REVISION
1	REVISION TO ANCHOR NOTES

Scale : N.T.S.
Drawn by : P.HILL
Checked by : A.THOMAS
Date of Plan : APR2016
File No. : S–2016–111

FOUNDATION AND ANCHOR DETAIL HIGHWAY LIGHTING

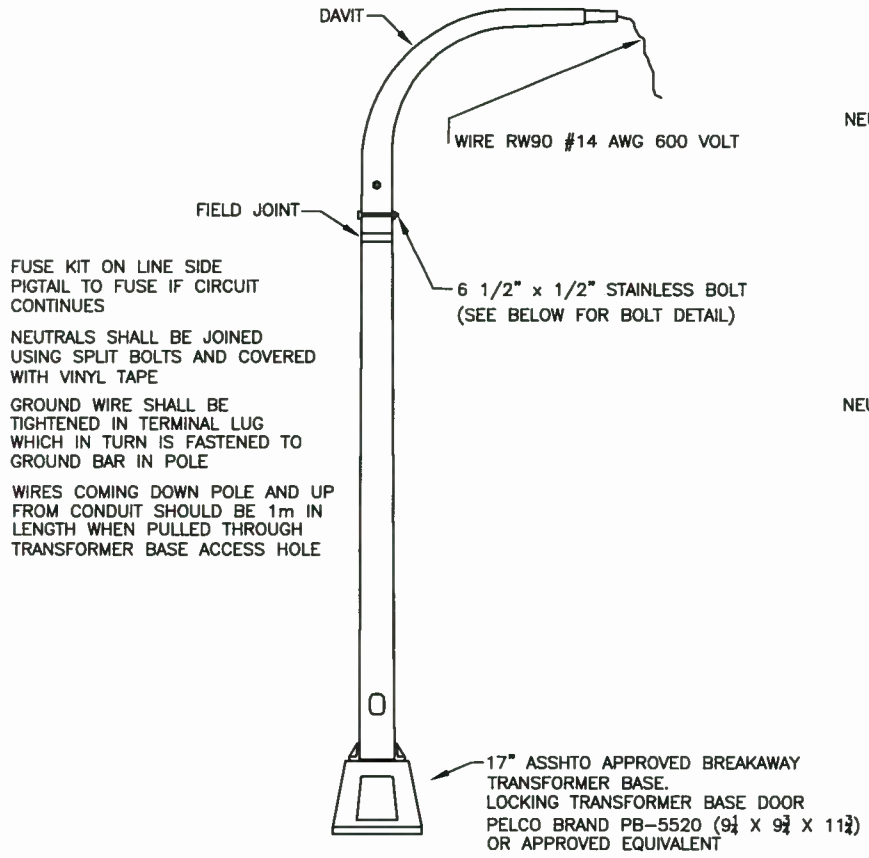

FUSE KIT ON LINE SIDE
PIGTAIL TO FUSE IF CIRCUIT CONTINUES

NEUTRALS SHALL BE JOINED USING SPLIT BOLTS AND COVERED WITH VINYL TAPE

GROUND WIRE SHALL BE TIGHTENED IN TERMINAL LUG WHICH IN TURN IS FASTENED TO GROUND BAR IN POLE

WIRES COMING DOWN POLE AND UP FROM CONDUIT SHOULD BE 1m IN LENGTH WHEN PULLED THROUGH TRANSFORMER BASE ACCESS HOLE

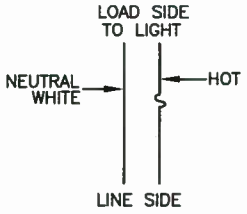

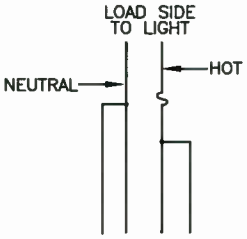

THIS DIAGRAM TO BE USED IF CIRCUIT CONTINUES TO ANOTHER POLE

PIGTAILS SHALL BE MADE WITH SPLIT BOLTS, COVERED WITH RUBBER COMPOUND TAPE (3M 130C) & VINYL TAPE (3M 88) OR EQUIVALENT

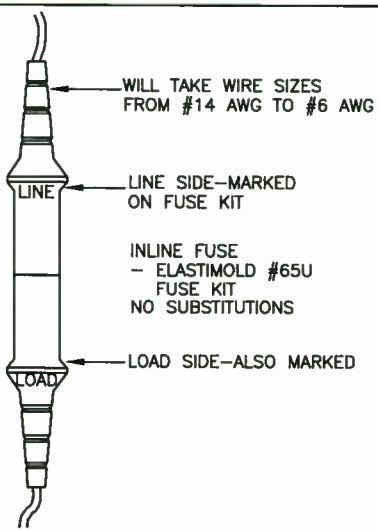

FUSE DETAIL

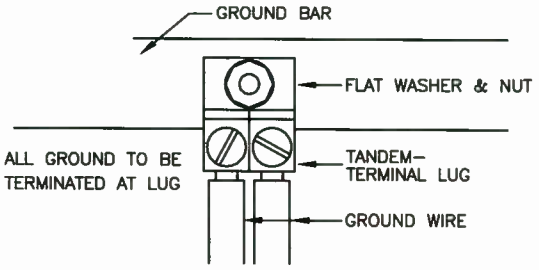

GROUND CONNECTION DETAIL

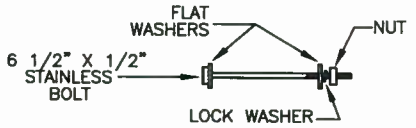

BOLT DETAIL

NOTES:

HIGHWAY LIGHTING POLE - C/W DAVIT
1. VALMONT/FERALUX PART NO. 11-40010C1060
2. METAL POLE-LITE PART NO. LRD-1035-4010S
3. 12.2m MOUNTING HEIGHT (typ.)
4. 3.0m DAVIT
5. 368mm BOLT CIRCLE
6. VALMONT/FERALUX PART NO. 12-40010ES1060 (DOUBLE DAVIT)
7. SINGLE DAVIT - 3m OFFSET
8. 188 WALL THICKNESS
9. SHAFT TENON TO BE ONE PIECE (NO WELDING)

HIGHWAY LIGHTING POLE - STRAIGHT SHAFT HORIZONTAL TENON
1. VALMONT/FERALUX PART NO. 81-400C1060-HT1-VD
2. METAL POLE-LITE PART NO. FTC-106-40-188-T2.38 -HORIZ
3. C/W WIRE STRAIN RELIEF
4. 12.2m MOUNTING HEIGHT (typ.)

NOVA SCOTIA
Transportation and Infrastructure Renewal

No.	REVISION
2	ADDED TRANSFORMER BASE
1	POLE PART NO. CORRECTIONS

Scale : N.T.S.
Drawn by : P.HILL
Checked by : A.THOMAS
Date of Plan : APR2016
File No. : S-2016-113

Manager Traffic Engineering and Road Safety

Director Road Safety

Executive Director Highway Engineering and Construction

POLE WIRING DETAILS HIGHWAY LIGHTING

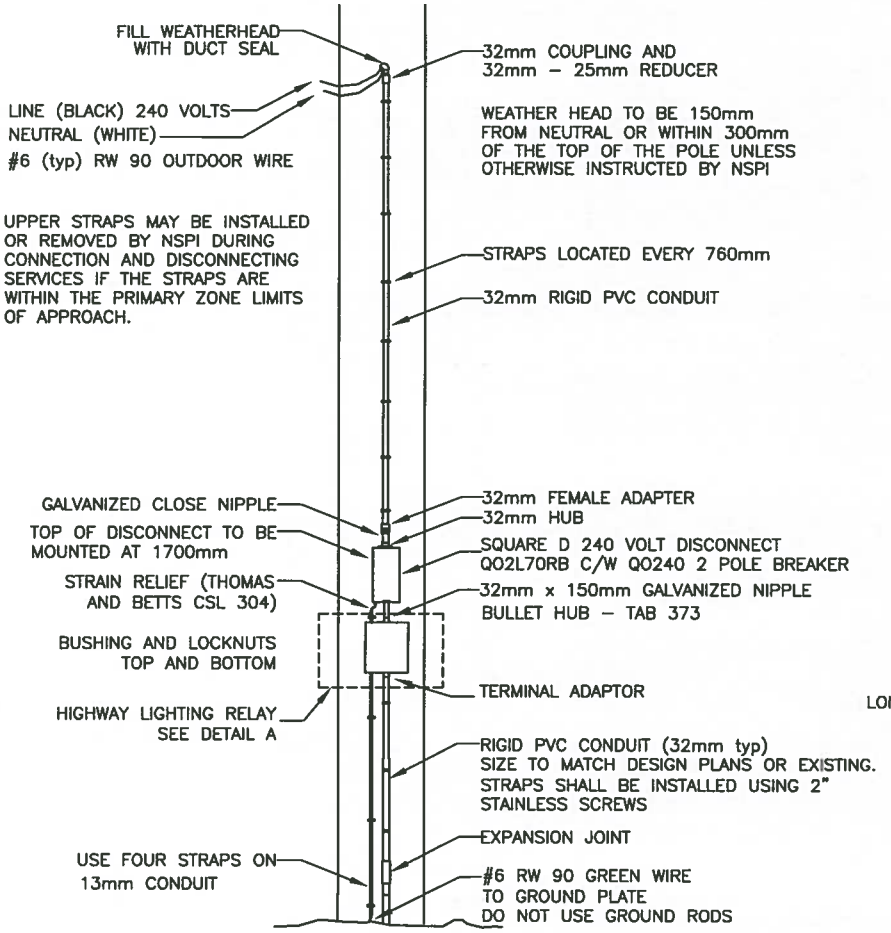

TYPE B SERVICE – 240 VOLT
C/W RELAY

DETAIL A

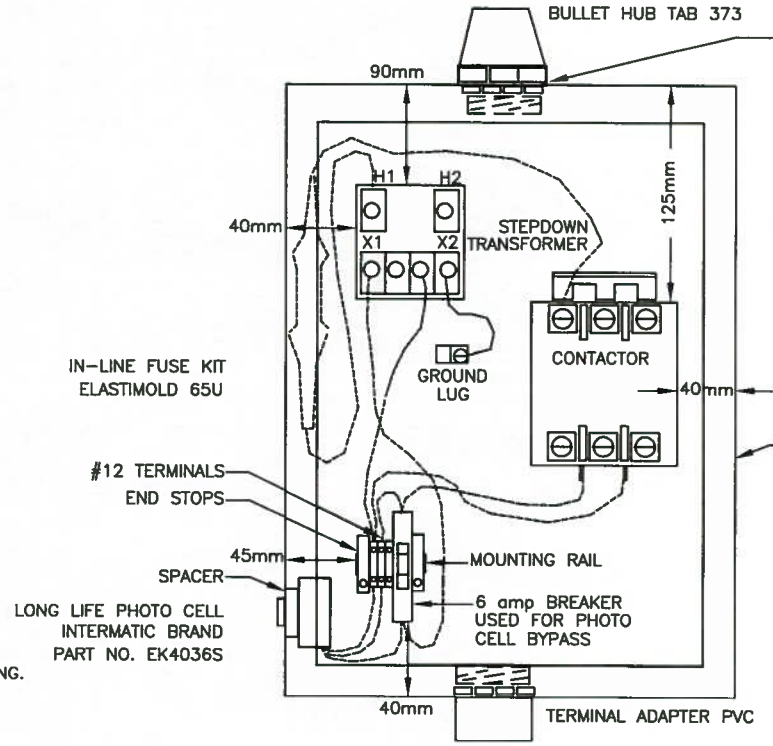

RELAY CONTROL ASSEMBLY MUST BE CUL, CSA, OR ENTELA CERTIFIED

NOTES:
1. ALL PADLOCKS ARE TO BE MASTER No. 1 WITH KEY No. 2396.
2. ALL PADLOCKS ARE TO BE SUPPLIED BY CONTRACTORS.
3. RELAY ENCLOSURE – SHALL BE PART No. TCSM141007 C/W POLICE TYPE LOCK, AS SUPPLIED BY APX ENCLOSURES, OR EQUIVALENT.
4. VOLTAGE LABELS REQUIRED ON DISCONNECT AND RELAY ENCLOSURE.

NOVA SCOTIA
Transportation and Infrastructure Renewal

No.	REVISION
1	LONG LIFE PHOTO CELL

Scale : N.T.S.
Drawn by : P.HILL
Checked by : A.THOMAS
Date of Plan : APR2016
File No. : S–2016–115

Manager Traffic Engineering and Road Safety

Director Road Safety

Executive Director Highway Engineering and Construction

TYPE B SERVICE - 240 VOLT HIGHWAY LIGHTING

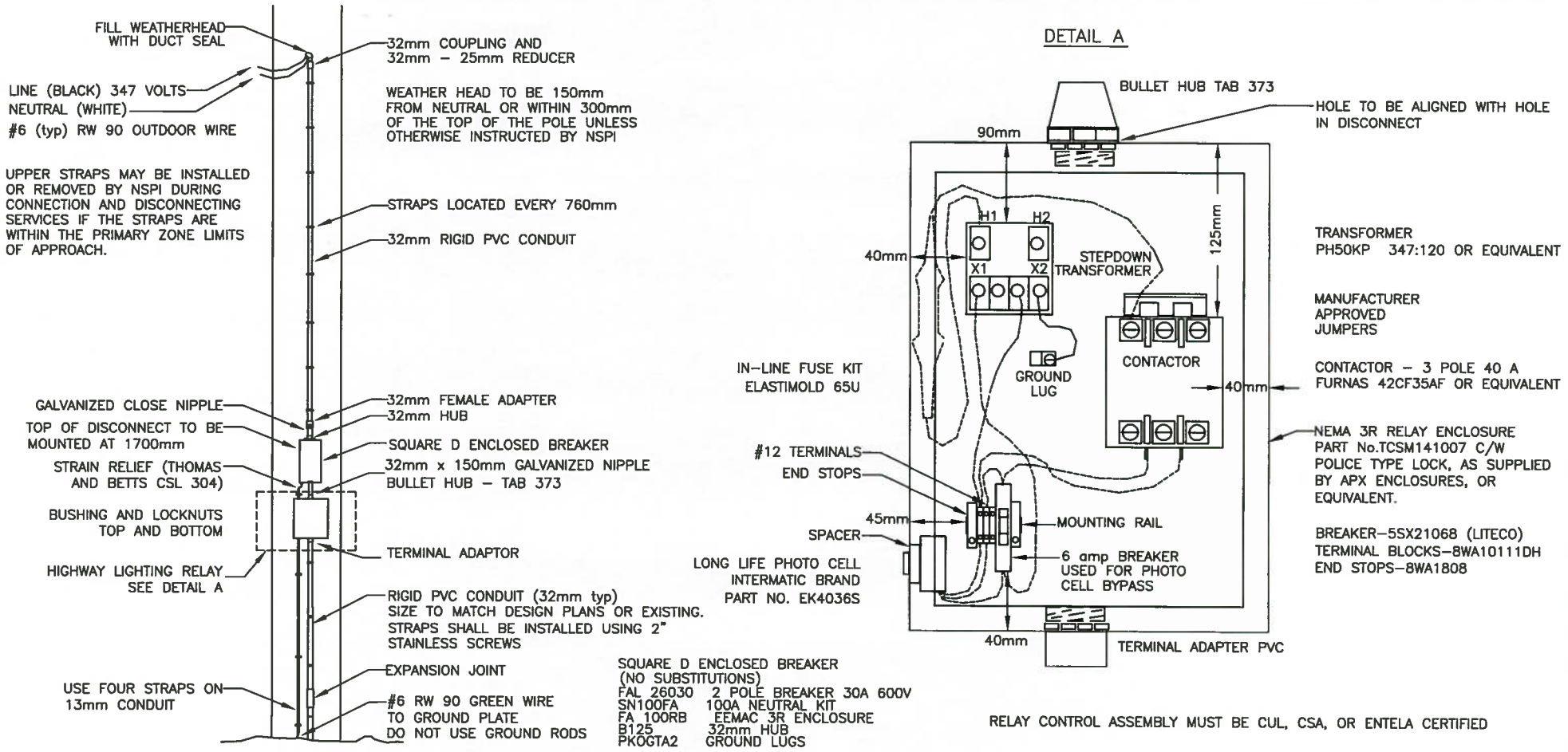

TYPE C SERVICE – 347 VOLT C/W RELAY

NOTES:
1. ALL PADLOCKS ARE TO BE MASTER No. 1 WITH KEY No. 2396.
2. ALL PADLOCKS ARE TO BE SUPPLIED BY CONTRACTORS.
3. RELAY ENCLOSURE – SHALL BE PART No. TCSM141007 C/W POLICE TYPE LOCK, AS SUPPLIED BY APX ENCLOSURES, OR EQUIVALENT.
4. VOLTAGE LABELS REQUIRED ON DISCONNECT AND RELAY ENCLOSURE.

NOVA SCOTIA
Transportation and Infrastructure Renewal

No.	REVISION
1	LONG LIFE PHOTO CELL

Scale : N.T.S.
Drawn by : P.HILL
Checked by : A.THOMAS
Date of Plan : APR2016
File No. : S–2016–116

Manager Traffic Engineering and Road Safety

Director Road Safety

Executive Director Highway Engineering and Construction

TYPE C SERVICE - 347 VOLT SINGLE PHASE HIGHWAY LIGHTING

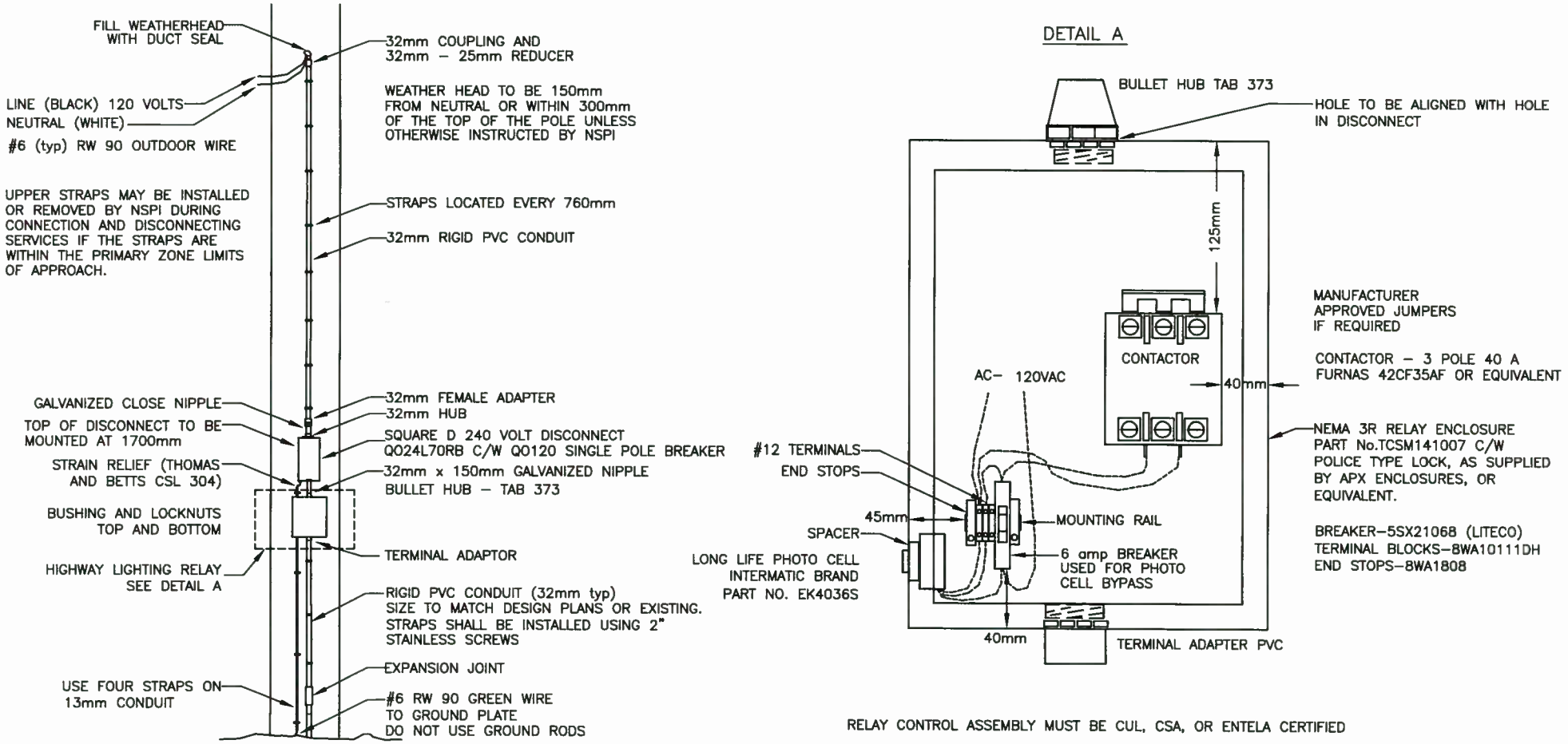

TYPE A SERVICE – 120/240 VOLT C/W RELAY

NOTES:
1. ALL PADLOCKS ARE TO BE MASTER No. 1 WITH KEY No. 2396.
2. ALL PADLOCKS ARE TO BE SUPPLIED BY CONTRACTORS.
3. RELAY ENCLOSURE – SHALL BE PART No. TCSM141007 C/W POLICE TYPE LOCK, AS SUPPLIED BY APX ENCLOSURES, OR EQUIVALENT.
4. VOLTAGE LABELS REQUIRED ON DISCONNECT AND RELAY ENCLOSURE.

NOVA SCOTIA
Transportation and Infrastructure Renewal

No.	REVISION
1	LONG LIFE PHOTO CELL

Scale : N.T.S.
Drawn by : P.HILL
Checked by : A.THOMAS
Date of Plan : APR2016
File No. : S–2016–117

Manager Traffic Engineering and Road Safety

Director Road Safety

Executive Director Highway Engineering and Construction

TYPE A SERVICE WITH RELAY 120 VOLT HIGHWAY LIGHTING

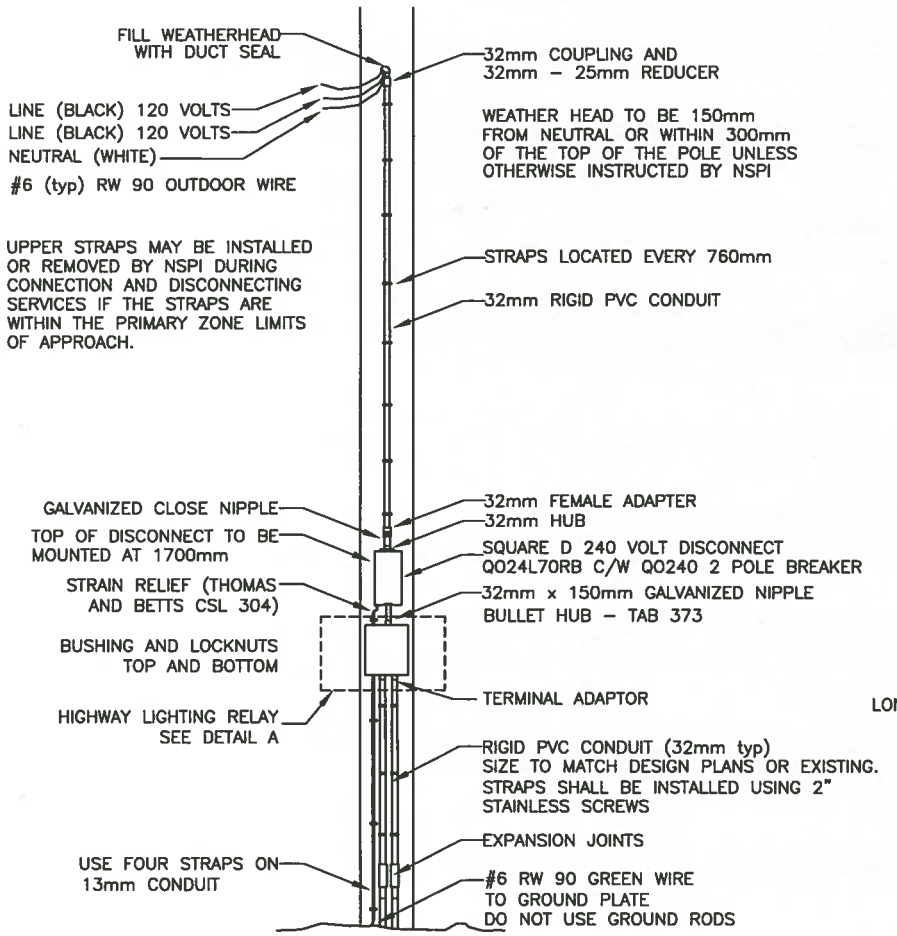

DETAIL A

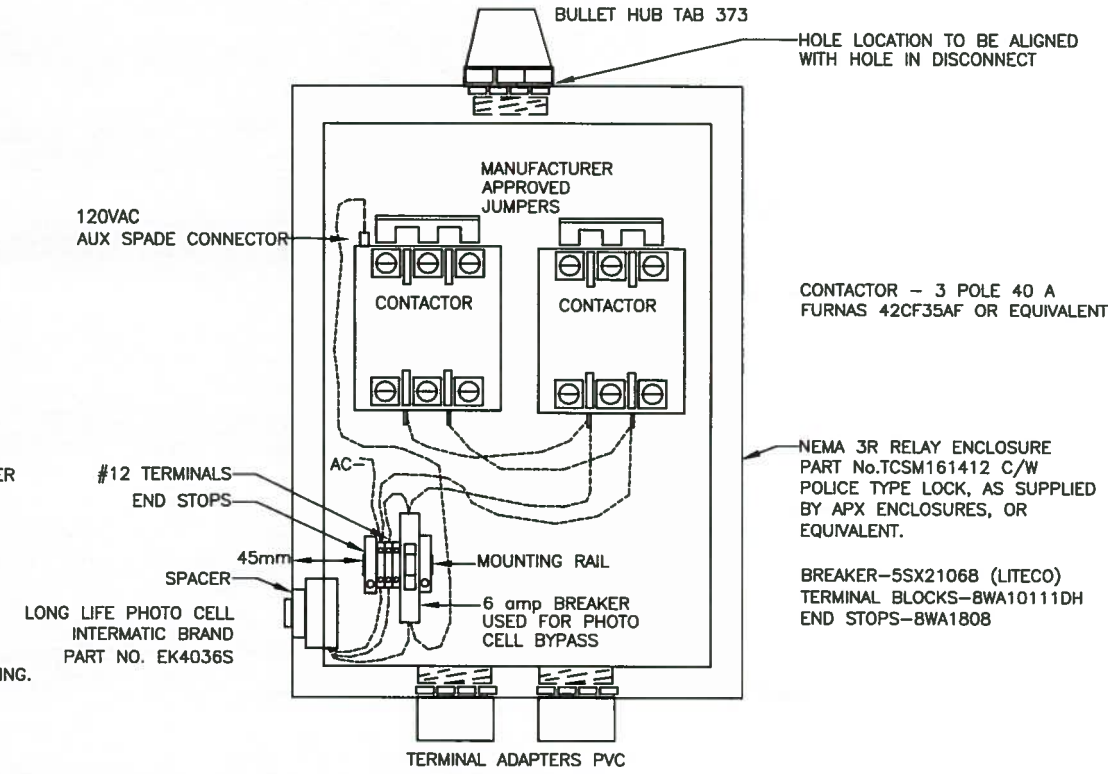

RELAY CONTROL ASSEMBLY MUST BE CUL, CSA, OR ENTELA CERTIFIED

TYPE A SERVICE – 120/240 VOLT C/W RELAY

NOTES:
1. ALL PADLOCKS ARE TO BE MASTER No. 1 WITH KEY No. 2396.
2. ALL PADLOCKS ARE TO BE SUPPLIED BY CONTRACTORS.
3. RELAY ENCLOSURE – SHALL BE PART No. TCSM161412 C/W POLICE TYPE LOCK, AS SUPPLIED BY APX ENCLOSURES, OR EQUIVALENT.
4. VOLTAGE LABELS REQUIRED ON DISCONNECT AND RELAY ENCLOSURE.

NOVA SCOTIA
Transportation and Infrastructure Renewal

No.	REVISION
1	LONG LIFE PHOTO CELL

Scale : N.T.S.
Drawn by : P.HILL
Checked by : A.THOMAS
Date of Plan : APR2016
File No. : S–2016–118

Manager Traffic Engineering and Road Safety
Director Road Safety
Executive Director Highway Engineering and Construction

TYPE A SERVICE WITH DOUBLE RELAY 120/240 VOLT HIGHWAY LIGHTING

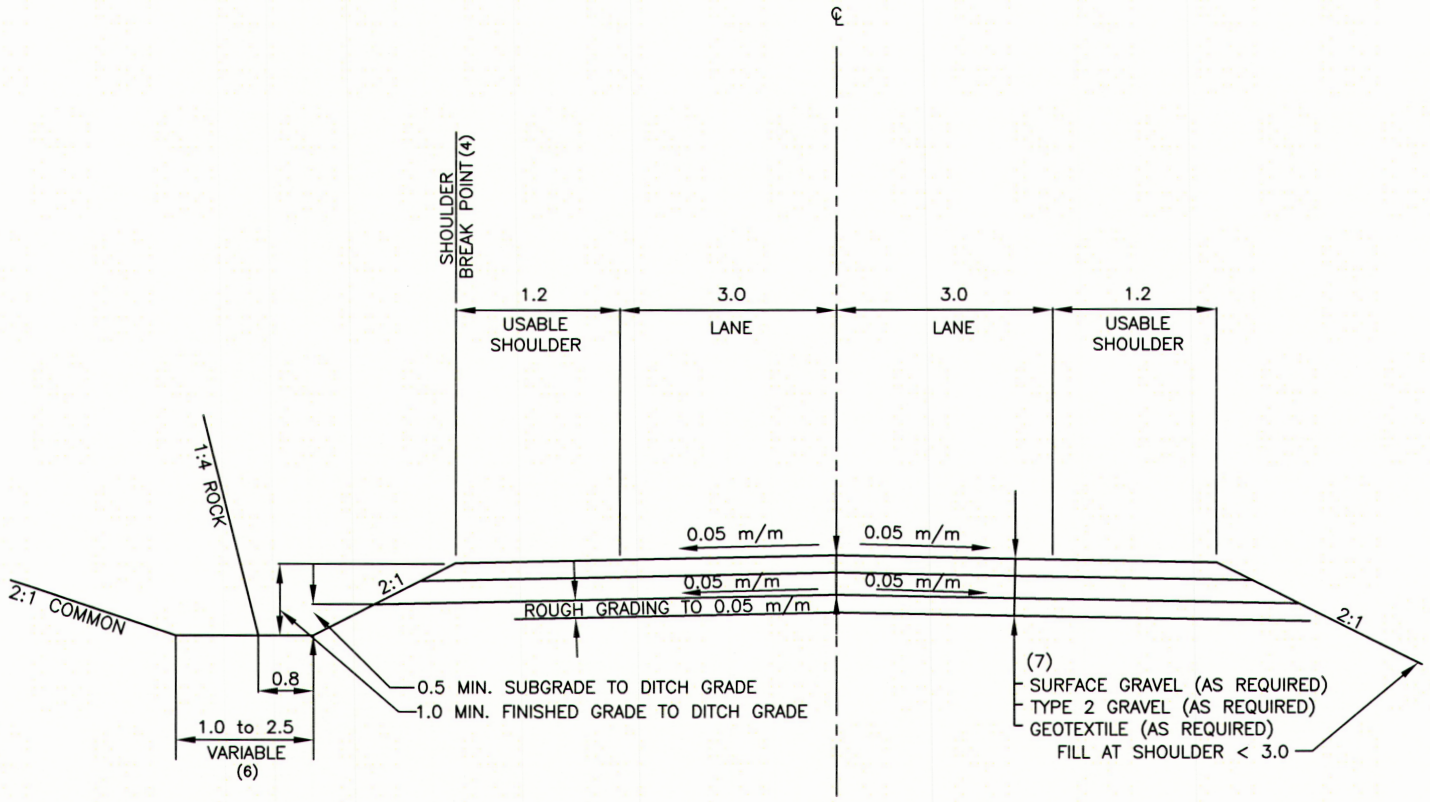

NOTES:
1. ALL DIMENSIONS ARE IN METRES UNLESS OTHERWISE NOTED.
2. DIMENSIONS ARE MEASURED PERPENDICULAR TO CENTERLINE.
3. THE SUBGRADE WIDTH IS DEPENDENT UPON THE DEPTH OF STRUCTURAL MATERIAL.
4. 0.4m ROUNDING CENTERED ON SHOULDER BREAK POINT.
5. RIDING SURFACE: UNPAVED.
6. DITCH WIDTH TO BE BASED ON HYDRAULIC PERFORMANCE.
7. SURFACE GRAVEL REQUIREMENTS TO BE DETERMINED IN CONSULTATION WITH CONSTRUCTION MANAGER.

NOVA SCOTIA
Transportation and Infrastructure Renewal

No.	REVISION

Scale :	N.T.S.
Drawn by :	R.SUTCLIFFE
Checked by :	K.BODDY
Date of Plan :	MAY–2018
File No. :	S–2017–019

A/Manager Highway Planning and Design

A/Director Highway Engineering Services

Executive Director Highway Engineering and Construction

TYPICAL GRAVEL ROAD CROSS SECTION

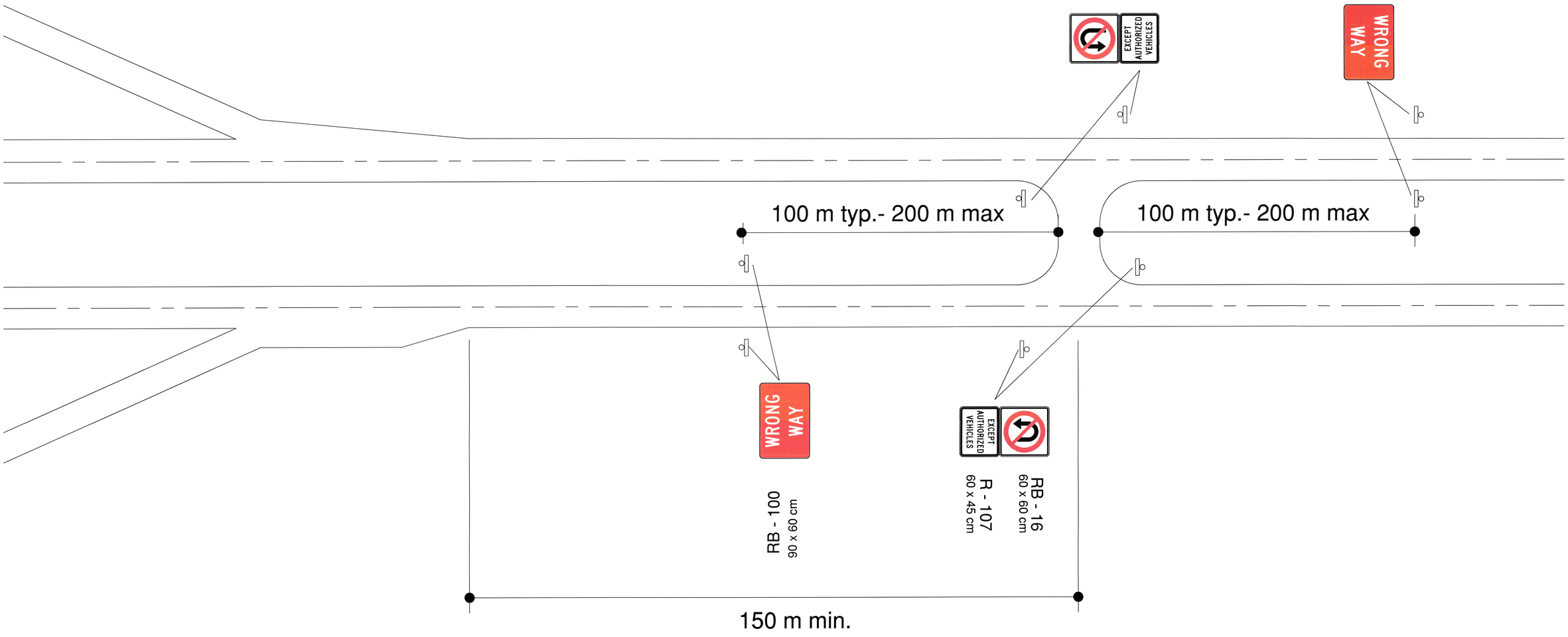

Designed by:		Traffic Authority — Feb 28/17 Date			Scale: NTS	HIGHWAY SIGNAGE PLAN	SIGNAGE AT MEDIAN CROSSOVERS
Surveyed by:					Date: FEBRUARY 2017		
Drawn by: R.HIRD		Manager, Traffic Engineering + Road Safety — Mar 1/17 Date			File No. : S-2017-332		
Checked by: A.MACDONALD					Sheet No. : 1 of 1		
Approved by: M.CROFT, R.HIRD			MK.	DATE	REVISION		

NOVA SCOTIA
Transportation and Infrastructure Renewal

FIGURE 1
DO NOT CROSS MEDIAN SIGN
NO MEDIAN CROSSOVER NEARBY

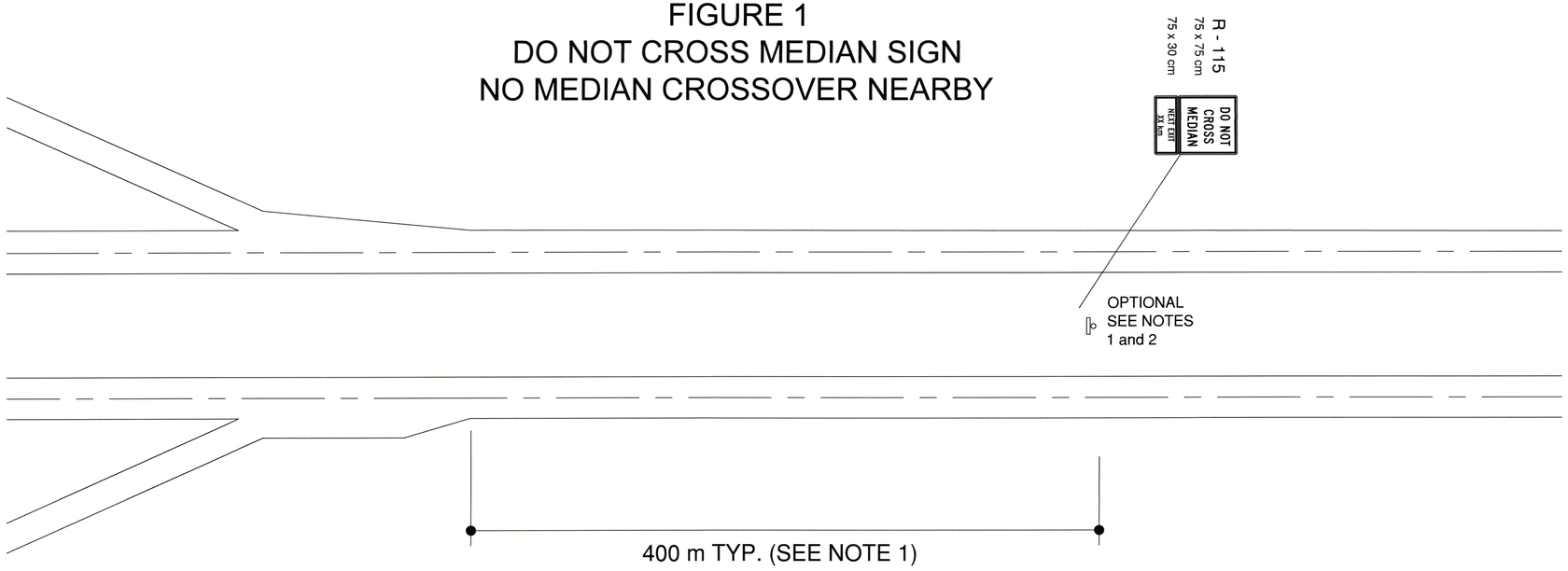

NOTES

1. DO NOT CROSS MEDIAN SIGN is optional and may be installed in areas where vehicles driving across the wide median has been recognized as a problem.
2. The DO NOT CROSS MEDIAN sign is typically placed 400m downstream from the end of the entrance ramp taper of an interchange.
3. If a median crossover is located placed less than 850 m downsteam of the entrance ramp taper, the DO NOT CROSS MEDIAN signage must be relocated downstream of the median crossover so that it is no closer than 500m from a median crossover.

FIGURE 2
DO NOT CROSS MEDIAN SIGN
WITH MEDIAN CROSSOVER NEARBY

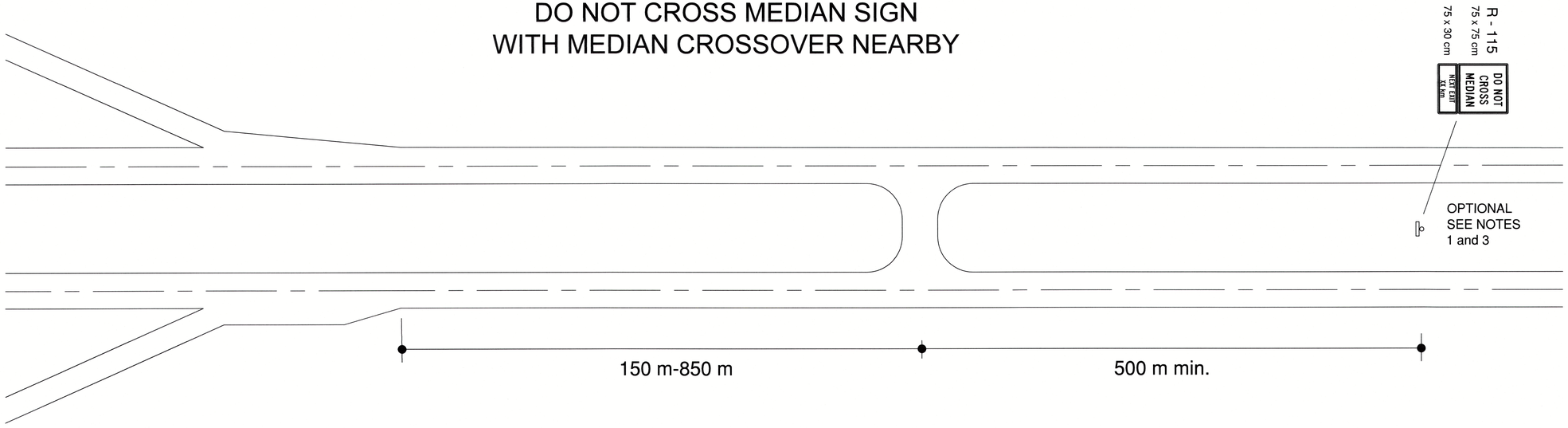

Designed by:		Traffic Authority	Feb 28/17 Date			NOVA SCOTIA Transportation and Infrastructure Renewal	Scale: NTS	HIGHWAY SIGNAGE PLAN
Surveyed by:		Manager, Traffic Engineering + Road Safety	Mar 1/17 Date				Date: FEBRUARY 2017	DO NOT CROSS MEDIAN SIGNAGE
Drawn by: R.HIRD				MK.	DATE	REVISION	File No. : S-2017-333	
Checked by: A.MACDONALD							Sheet No. : 1 of 1	
Approved by: M.CROFT, R.HIRD								

S-2018-315

DISTANCE MARKERS

HIGHWAY SIGNAGE

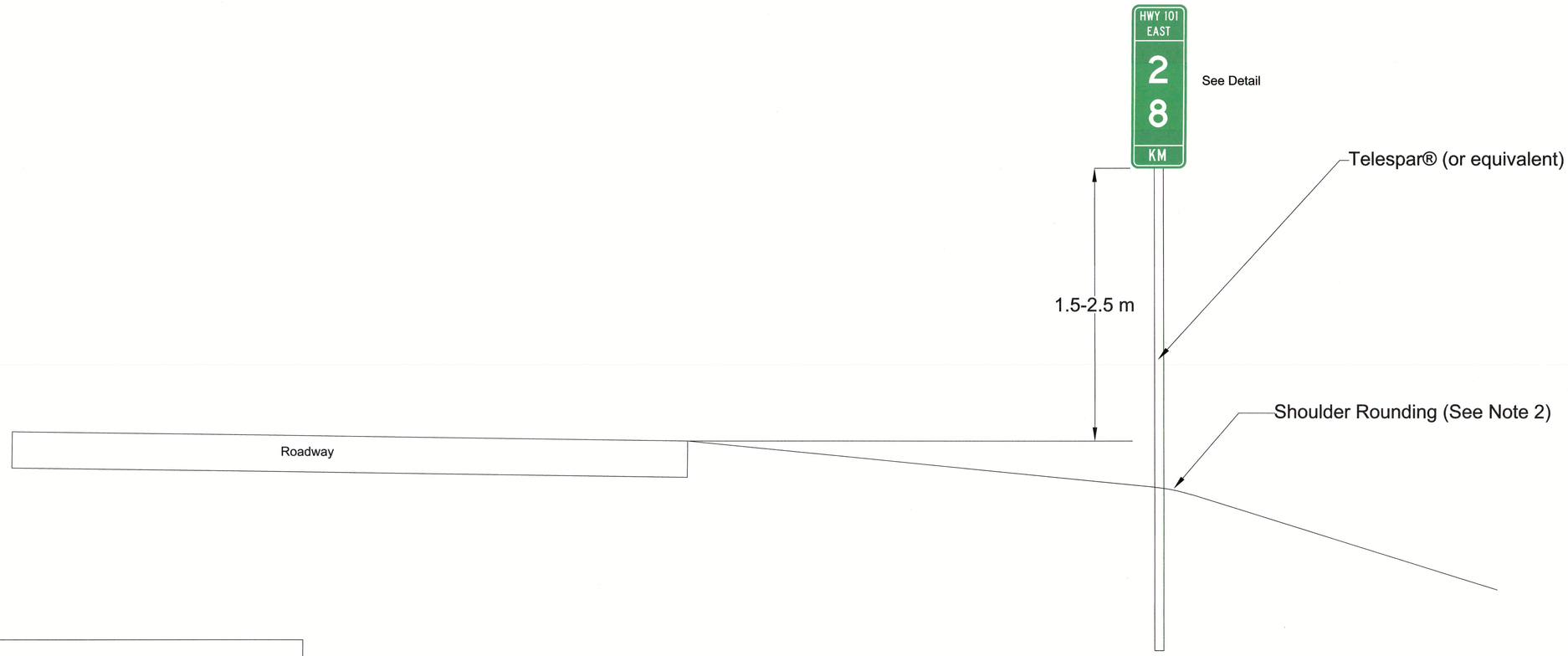

DETAIL

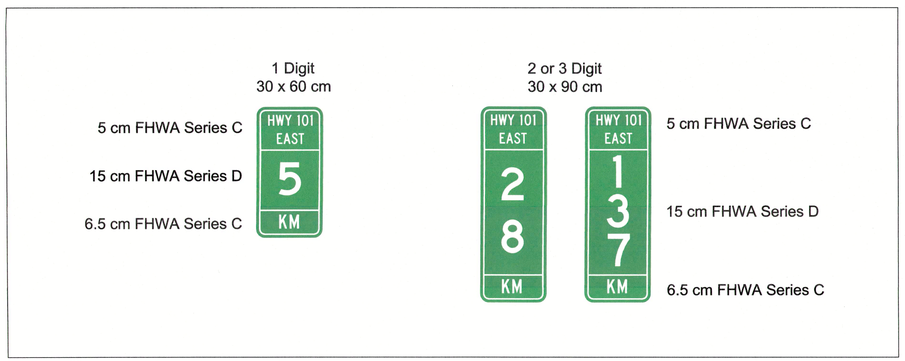

Notes

1. Distance Markers to be installed in accordance with Policy PO1087
2. Marker post may be installed behind guardrail and attached to the guradrail post in lieu of burying in the shoulder rounding.

Designed by:		Provincial Traffic Authority	Date			Scale: NTS	HIGHWAY SIGNS
Surveyed by:		Manager, Traffic Engineering Services	Oct 25/18			Date: October 2018	DISTANCE MARKERS
Drawn by: RH			Date			File No. : S-2018-315	
Checked by: PH						Sheet No. : 1 of 1	
Approved by: MC				MK.	DATE	REVISION	

NOVA SCOTIA
Transportation and Infrastructure Renewal

S-2018-334

T_INTERSECTION

HIGHWAY_PAVEMENT_MARKINGS

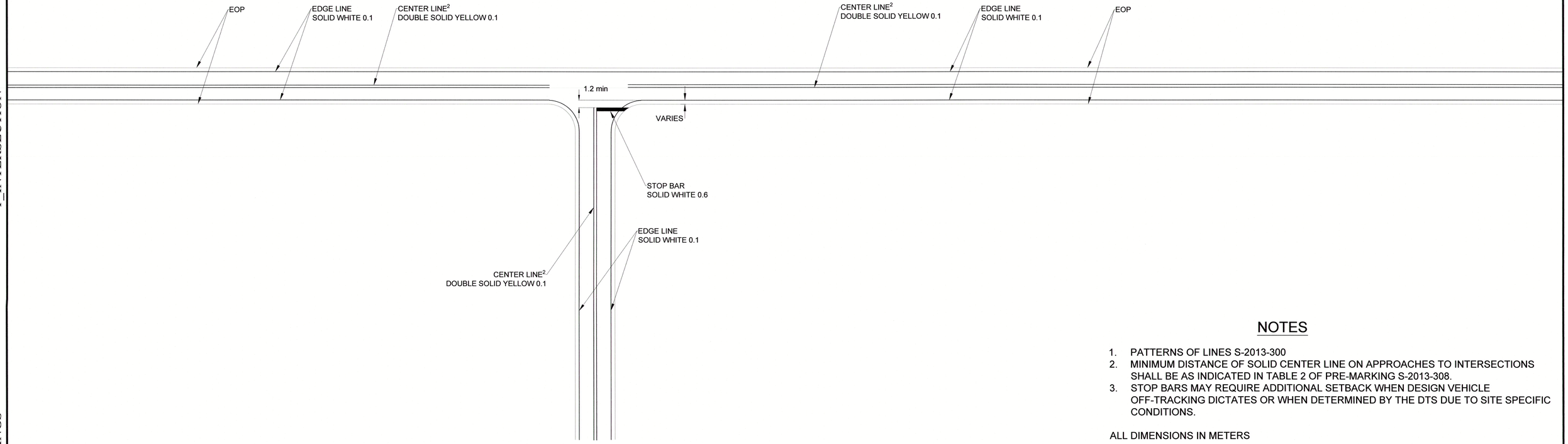

NOTES

1. PATTERNS OF LINES S-2013-300
2. MINIMUM DISTANCE OF SOLID CENTER LINE ON APPROACHES TO INTERSECTIONS SHALL BE AS INDICATED IN TABLE 2 OF PRE-MARKING S-2013-308.
3. STOP BARS MAY REQUIRE ADDITIONAL SETBACK WHEN DESIGN VEHICLE OFF-TRACKING DICTATES OR WHEN DETERMINED BY THE DTS DUE TO SITE SPECIFIC CONDITIONS.

ALL DIMENSIONS IN METERS

Designed by:		Traffic Authority	Date			NOVA SCOTIA Transportation and Infrastructure Renewal	Scale: NTS	HIGHWAY PAVEMENT MARKINGS	T INTERSECTION
Surveyed by:							Date: SEPT 2018		
Drawn by: P. HILL		Manager Traffic Engineering and Road Safety	NOV 5/18 Date	MK.	DATE	REVISION	File No. : S-2018-334		
Checked by: R. HIRD							Sheet No. : 1 of 1		
Approved by: M. CROFT									

S-2018-335

T_INTERSECTION_WITH_LEFT_TURN_LANES

HIGHWAY_PAVEMENT_MARKINGS

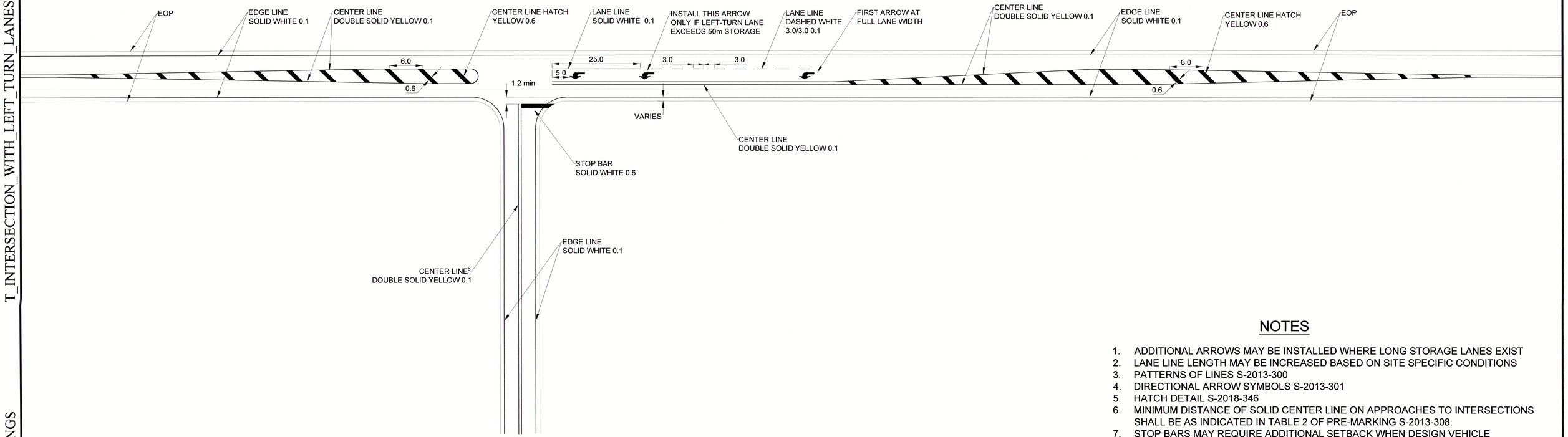

NOTES

1. ADDITIONAL ARROWS MAY BE INSTALLED WHERE LONG STORAGE LANES EXIST
2. LANE LINE LENGTH MAY BE INCREASED BASED ON SITE SPECIFIC CONDITIONS
3. PATTERNS OF LINES S-2013-300
4. DIRECTIONAL ARROW SYMBOLS S-2013-301
5. HATCH DETAIL S-2018-346
6. MINIMUM DISTANCE OF SOLID CENTER LINE ON APPROACHES TO INTERSECTIONS SHALL BE AS INDICATED IN TABLE 2 OF PRE-MARKING S-2013-308.
7. STOP BARS MAY REQUIRE ADDITIONAL SETBACK WHEN DESIGN VEHICLE OFF-TRACKING DICTATES OR WHEN DETERMINED BY THE DTS DUE TO SITE SPECIFIC CONDITIONS.

ALL DIMENSIONS IN METERS

Designed by:		Traffic Authority	Date				Scale: NTS	HIGHWAY PAVEMENT MARKINGS
Surveyed by:						NOVA SCOTIA Transportation and Infrastructure Renewal	Date: SEPT 2018	
Drawn by: P. HILL		Manager Traffic Engineering and Road Safety	Date				File No. : S-2018-335	T INTERSECTION WITH LEFT TURN LANES
Checked by: R. HIRD							Sheet No. : 1 of 1	
Approved by: M. CROFT				MK.	DATE	REVISION		

S-2018-336

T_INTERSECTION_WITH_RIGHT_TURN_LANES

HIGHWAY_PAVEMENT_MARKINGS

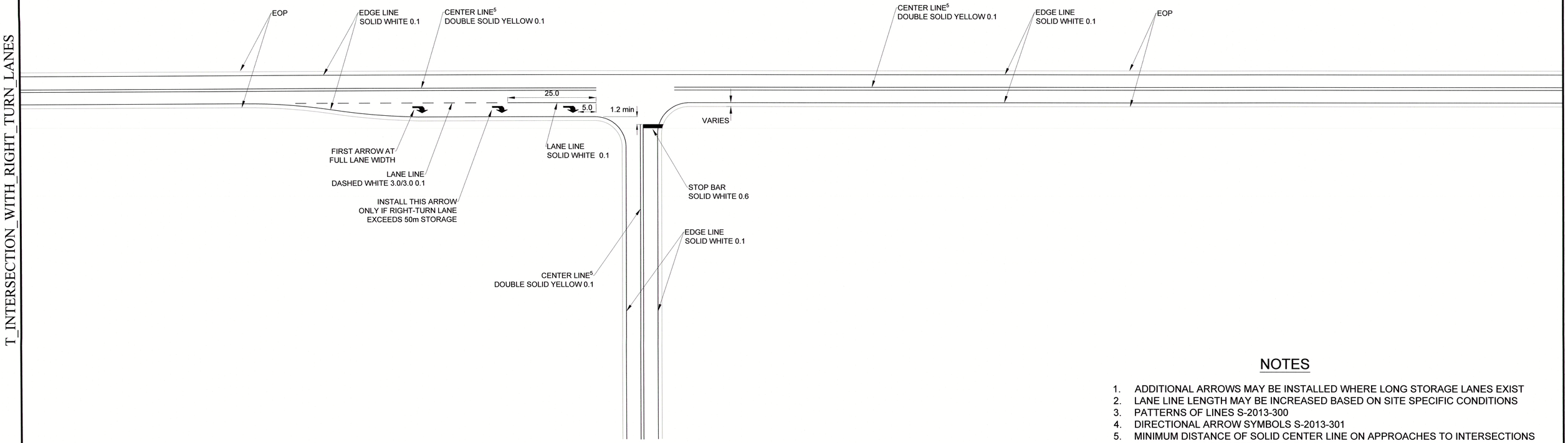

NOTES

1. ADDITIONAL ARROWS MAY BE INSTALLED WHERE LONG STORAGE LANES EXIST
2. LANE LINE LENGTH MAY BE INCREASED BASED ON SITE SPECIFIC CONDITIONS
3. PATTERNS OF LINES S-2013-300
4. DIRECTIONAL ARROW SYMBOLS S-2013-301
5. MINIMUM DISTANCE OF SOLID CENTER LINE ON APPROACHES TO INTERSECTIONS SHALL BE AS INDICATED IN TABLE 2 OF PRE-MARKING S-2013-308.
6. STOP BARS MAY REQUIRE ADDITIONAL SETBACK WHEN DESIGN VEHICLE OFF-TRACKING DICTATES OR WHEN DETERMINED BY THE DTS DUE TO SITE SPECIFIC CONDITIONS.

ALL DIMENSIONS IN METERS

Designed by:		Traffic Authority / Date				NOVA SCOTIA Transportation and Infrastructure Renewal	Scale: NTS	HIGHWAY PAVEMENT MARKINGS
Surveyed by:							Date: SEPT 2018	T INTERSECTION WITH RIGHT TURN LANE
Drawn by: P. HILL		Manager Traffic Engineering and Road Safety / NOV 5/18 Date					File No. : S-2018-336	
Checked by: R. HIRD				MK.	DATE	REVISION	Sheet No. : 1 of 1	
Approved by: M. CROFT								

S-2018-337

T_INTERSECTION_WITH_ISLANDS

HIGHWAY_PAVEMENT_MARKINGS

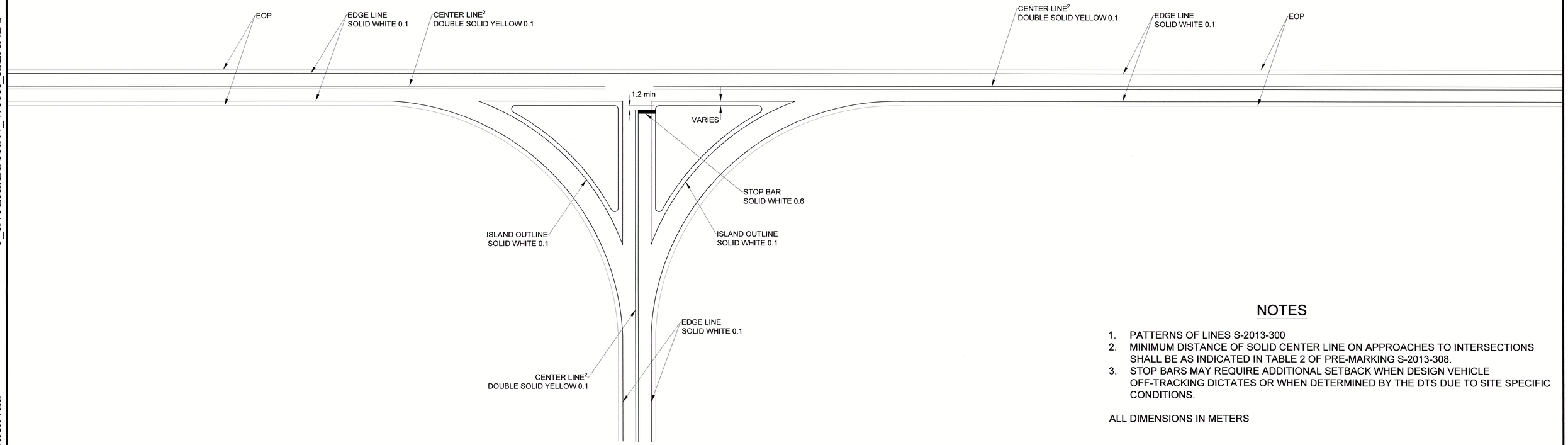

NOTES

1. PATTERNS OF LINES S-2013-300
2. MINIMUM DISTANCE OF SOLID CENTER LINE ON APPROACHES TO INTERSECTIONS SHALL BE AS INDICATED IN TABLE 2 OF PRE-MARKING S-2013-308.
3. STOP BARS MAY REQUIRE ADDITIONAL SETBACK WHEN DESIGN VEHICLE OFF-TRACKING DICTATES OR WHEN DETERMINED BY THE DTS DUE TO SITE SPECIFIC CONDITIONS.

ALL DIMENSIONS IN METERS

Designed by:		Traffic Authority	Date			NOVA SCOTIA Transportation and Infrastructure Renewal	Scale: NTS
Surveyed by:							Date: SEPT 2018
Drawn by: P. HILL		Manager Traffic Engineering and Road Safety	NOV 5/18				File No. : S-2018-337
Checked by: R. HIRD							Sheet No. : 1 of 1
Approved by: M. CROFT				MK.	DATE	REVISION	

HIGHWAY PAVEMENT MARKINGS

T INTERSECTION WITH ISLANDS

S-2018-338

HIGHWAY_PAVEMENT_MARKINGS T_INTERSECTION_WITH_ISLANDS_AND_LEFT_TURN_LANES

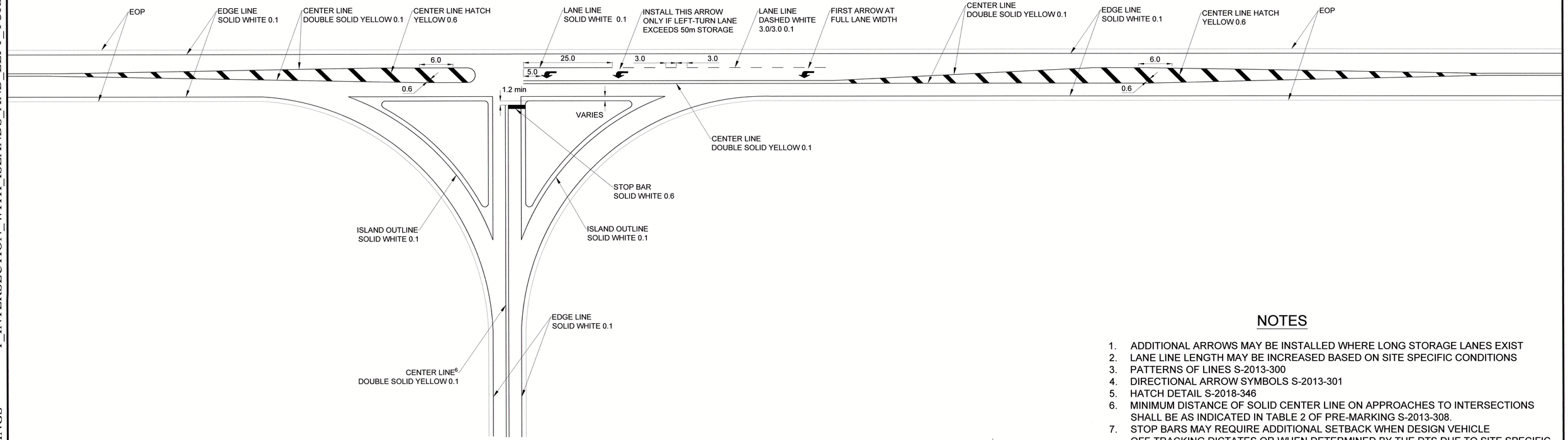

NOTES

1. ADDITIONAL ARROWS MAY BE INSTALLED WHERE LONG STORAGE LANES EXIST
2. LANE LINE LENGTH MAY BE INCREASED BASED ON SITE SPECIFIC CONDITIONS
3. PATTERNS OF LINES S-2013-300
4. DIRECTIONAL ARROW SYMBOLS S-2013-301
5. HATCH DETAIL S-2018-346
6. MINIMUM DISTANCE OF SOLID CENTER LINE ON APPROACHES TO INTERSECTIONS SHALL BE AS INDICATED IN TABLE 2 OF PRE-MARKING S-2013-308.
7. STOP BARS MAY REQUIRE ADDITIONAL SETBACK WHEN DESIGN VEHICLE OFF-TRACKING DICTATES OR WHEN DETERMINED BY THE DTS DUE TO SITE SPECIFIC CONDITIONS.

ALL DIMENSIONS IN METERS

Designed by:		Traffic Authority	Date			NOVA SCOTIA Transportation and Infrastructure Renewal	Scale: NTS
Surveyed by:							Date: SEPT 2018
Drawn by: P. HILL		Manager Traffic Engineering and Road Safety	NOV 5/18				File No. : S-2018-338
Checked by: R. HIRD			Date				Sheet No. : 1 of 1
Approved by: M. CROFT				MK.	DATE	REVISION	

HIGHWAY PAVEMENT MARKINGS

T INTERSECTION WITH ISLANDS AND LEFT TURN LANES

S-2018-339

HIGHWAY_PAVEMENT_MARKINGS T_INTERSECTION_WITH_ISLANDS_AND_RIGHT_TURN_LANES

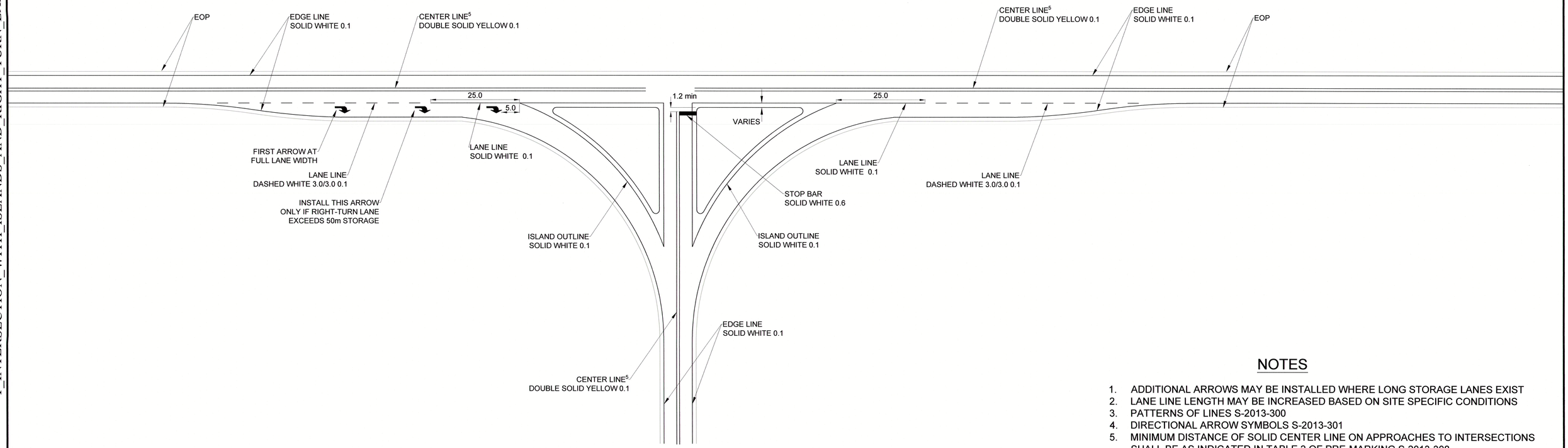

NOTES

1. ADDITIONAL ARROWS MAY BE INSTALLED WHERE LONG STORAGE LANES EXIST
2. LANE LINE LENGTH MAY BE INCREASED BASED ON SITE SPECIFIC CONDITIONS
3. PATTERNS OF LINES S-2013-300
4. DIRECTIONAL ARROW SYMBOLS S-2013-301
5. MINIMUM DISTANCE OF SOLID CENTER LINE ON APPROACHES TO INTERSECTIONS SHALL BE AS INDICATED IN TABLE 2 OF PRE-MARKING S-2013-308.
6. STOP BARS MAY REQUIRE ADDITIONAL SETBACK WHEN DESIGN VEHICLE OFF-TRACKING DICTATES OR WHEN DETERMINED BY THE DTS DUE TO SITE SPECIFIC CONDITIONS.

ALL DIMENSIONS IN METERS

Designed by:		Traffic Authority / Date			NOVA SCOTIA Transportation and Infrastructure Renewal	Scale: NTS	HIGHWAY PAVEMENT MARKINGS
Surveyed by:						Date: SEPT 2018	T INTERSECTION WITH ISLANDS AND RIGHT TURN LANES
Drawn by: P. HILL		Manager Traffic Engineering and Road Safety / Date: Nov 5/18				File No. : S-2018-339	
Checked by: R. HIRD						Sheet No. : 1 of 1	
Approved by: M. CROFT			MK.	DATE	REVISION		

S-2018-340

INTERSECTION

HIGHWAY_PAVEMENT_MARKINGS

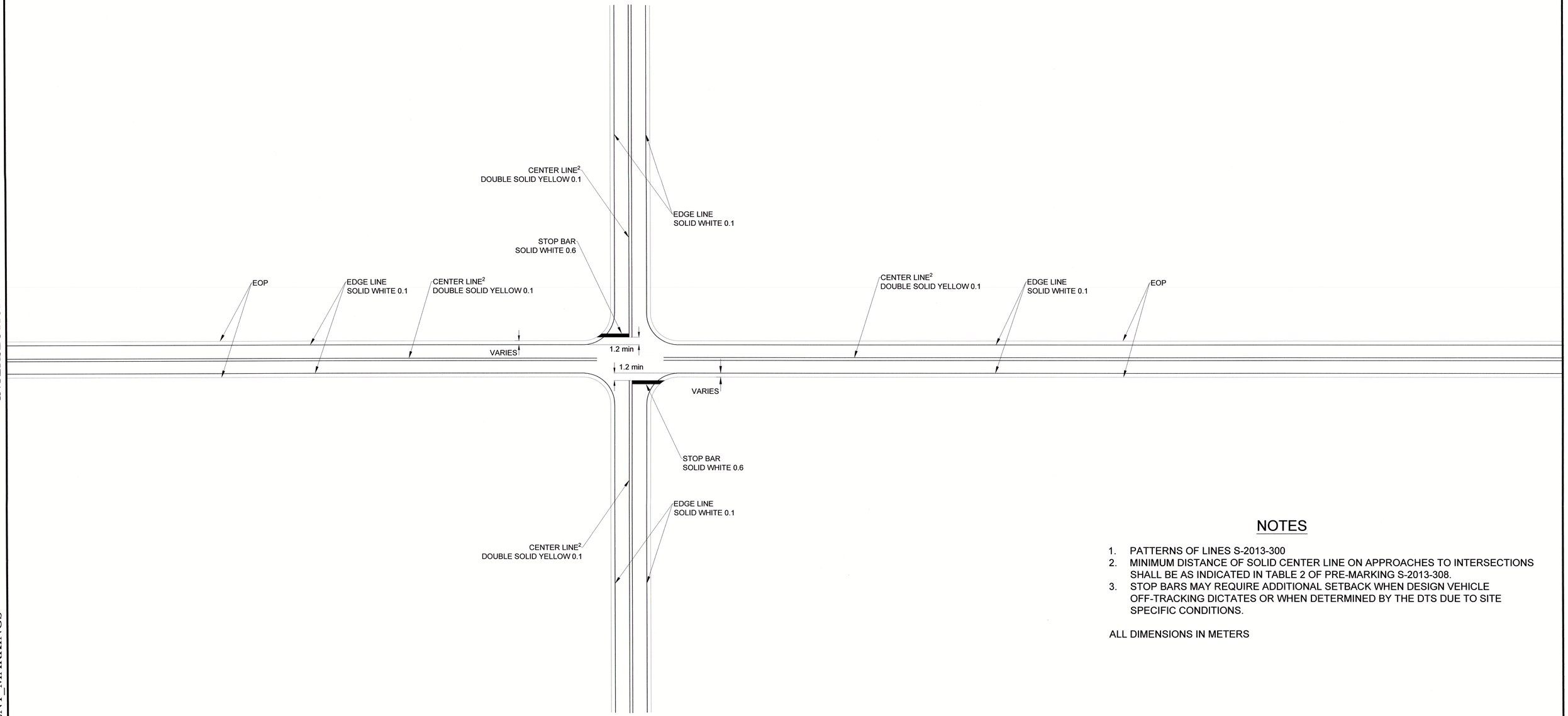

NOTES

1. PATTERNS OF LINES S-2013-300
2. MINIMUM DISTANCE OF SOLID CENTER LINE ON APPROACHES TO INTERSECTIONS SHALL BE AS INDICATED IN TABLE 2 OF PRE-MARKING S-2013-308.
3. STOP BARS MAY REQUIRE ADDITIONAL SETBACK WHEN DESIGN VEHICLE OFF-TRACKING DICTATES OR WHEN DETERMINED BY THE DTS DUE TO SITE SPECIFIC CONDITIONS.

ALL DIMENSIONS IN METERS

Designed by:		Traffic Authority	Date				Scale: NTS	HIGHWAY PAVEMENT MARKINGS	INTERSECTION
Surveyed by:						NOVA SCOTIA Transportation and Infrastructure Renewal	Date: SEPT 2018		
Drawn by: P. HILL		Manager Traffic Engineering and Road Safety	Date	MK.	DATE	REVISION	File No. : S-2018-340		
Checked by: R. HIRD							Sheet No. : 1 of 1		
Approved by: M. CROFT									

S-2018-341

INTERSECTION_WITH_LEFT_TURN_LANES

HIGHWAY_PAVEMENT_MARKINGS

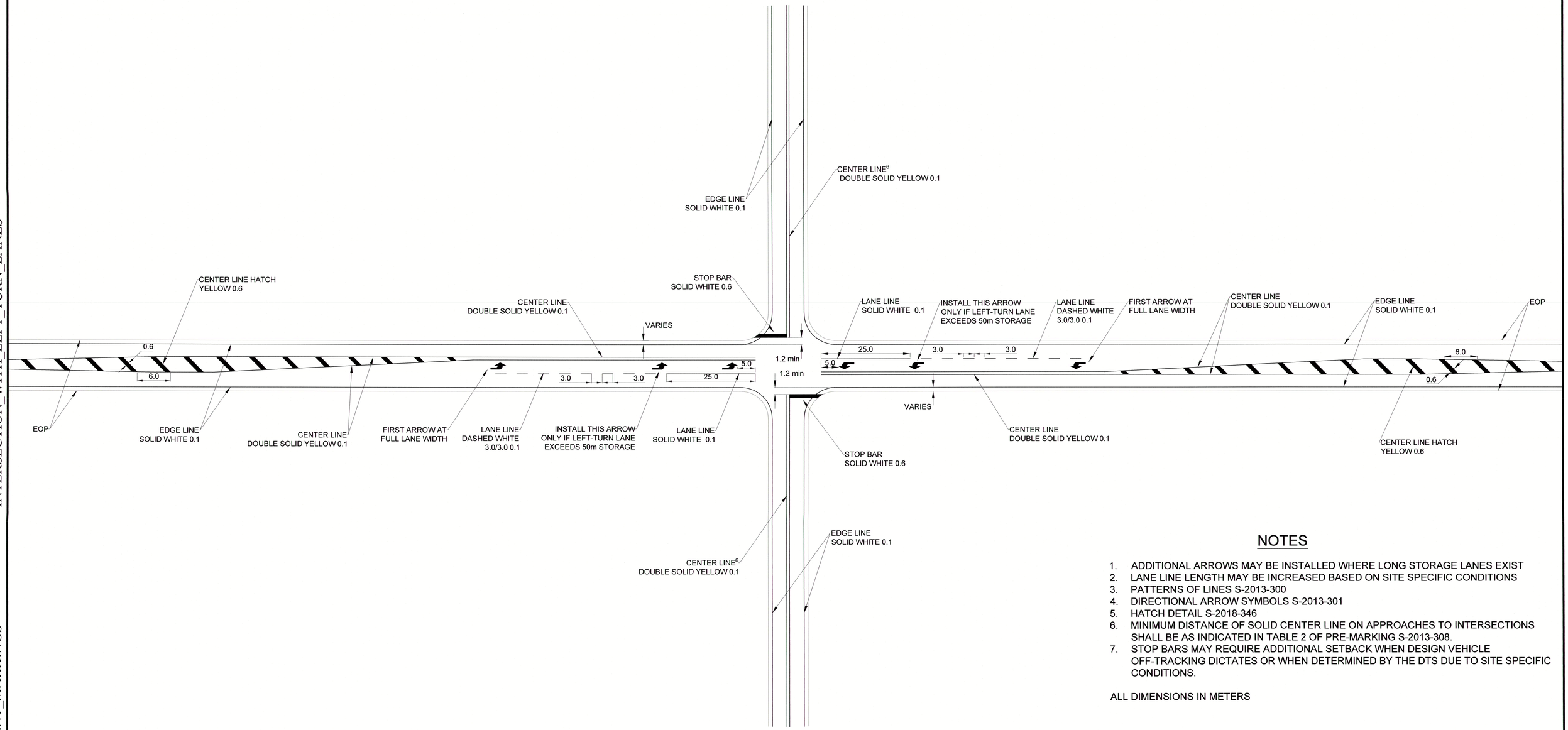

NOTES

1. ADDITIONAL ARROWS MAY BE INSTALLED WHERE LONG STORAGE LANES EXIST
2. LANE LINE LENGTH MAY BE INCREASED BASED ON SITE SPECIFIC CONDITIONS
3. PATTERNS OF LINES S-2013-300
4. DIRECTIONAL ARROW SYMBOLS S-2013-301
5. HATCH DETAIL S-2018-346
6. MINIMUM DISTANCE OF SOLID CENTER LINE ON APPROACHES TO INTERSECTIONS SHALL BE AS INDICATED IN TABLE 2 OF PRE-MARKING S-2013-308.
7. STOP BARS MAY REQUIRE ADDITIONAL SETBACK WHEN DESIGN VEHICLE OFF-TRACKING DICTATES OR WHEN DETERMINED BY THE DTS DUE TO SITE SPECIFIC CONDITIONS.

ALL DIMENSIONS IN METERS

Designed by:		Traffic Authority / Date				NOVA SCOTIA Transportation and Infrastructure Renewal	Scale: NTS	HIGHWAY PAVEMENT MARKINGS
Surveyed by:							Date: SEPT 2018	INTERSECTION WITH LEFT TURN LANES
Drawn by: P. HILL							File No. : S-2018-341	
Checked by: R. HIRD							Sheet No. : 1 of 1	
Approved by: M. CROFT		Manager Traffic Engineering and Road Safety / Date (NOV 5/18)	MK.	DATE	REVISION			

S-2018-342

HIGHWAY_PAVEMENT_MARKINGS

INTERSECTION_WITH_RIGHT_TURN_LANES

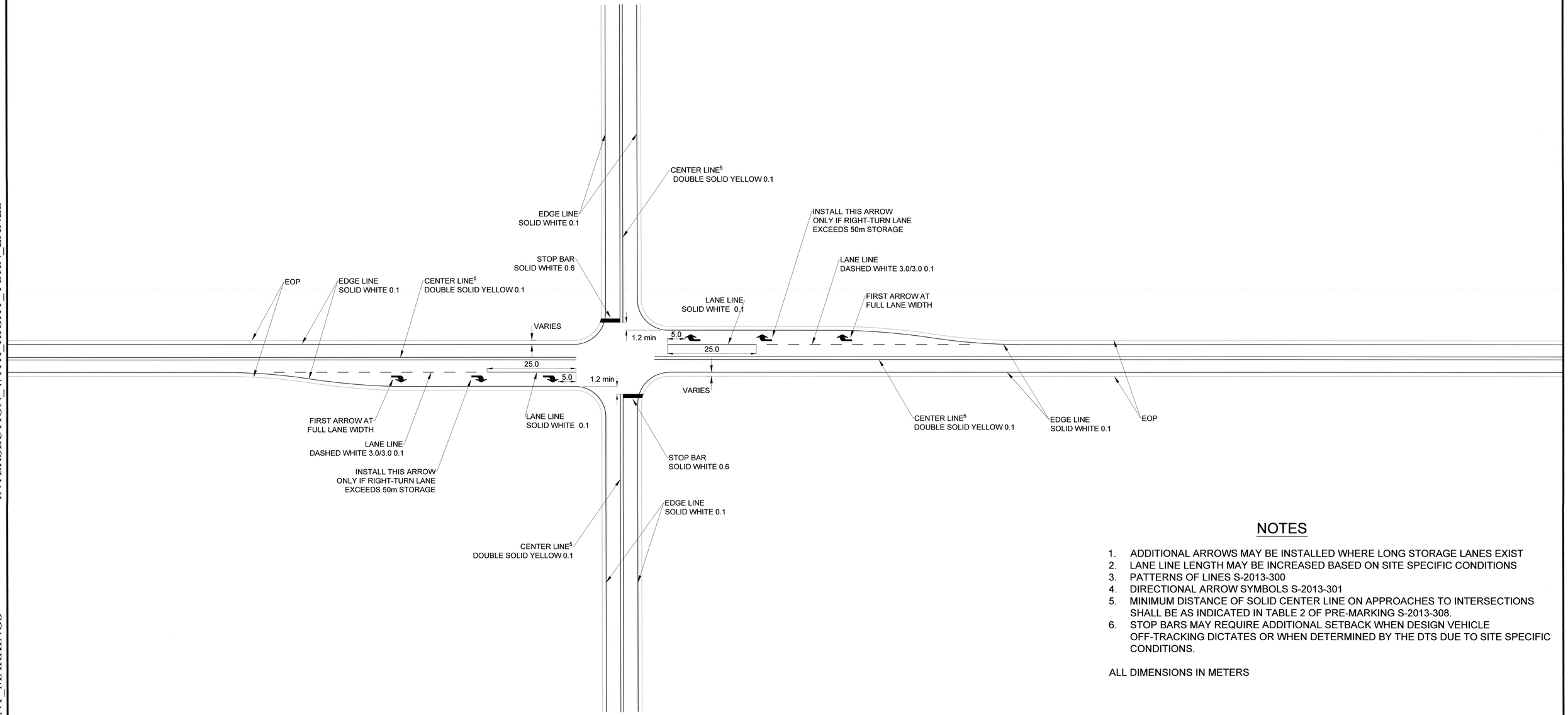

NOTES

1. ADDITIONAL ARROWS MAY BE INSTALLED WHERE LONG STORAGE LANES EXIST
2. LANE LINE LENGTH MAY BE INCREASED BASED ON SITE SPECIFIC CONDITIONS
3. PATTERNS OF LINES S-2013-300
4. DIRECTIONAL ARROW SYMBOLS S-2013-301
5. MINIMUM DISTANCE OF SOLID CENTER LINE ON APPROACHES TO INTERSECTIONS SHALL BE AS INDICATED IN TABLE 2 OF PRE-MARKING S-2013-308.
6. STOP BARS MAY REQUIRE ADDITIONAL SETBACK WHEN DESIGN VEHICLE OFF-TRACKING DICTATES OR WHEN DETERMINED BY THE DTS DUE TO SITE SPECIFIC CONDITIONS.

ALL DIMENSIONS IN METERS

Designed by:					
Surveyed by:					
Drawn by: P. HILL					
Checked by: R. HIRD					
Approved by: M. CROFT					

Traffic Authority — Date

Manager Traffic Engineering and Road Safety — Date NOV 5/18

MK.	DATE	REVISION

NOVA SCOTIA
Transportation and Infrastructure Renewal

Scale: NTS
Date: SEPT 2018
File No. : S-2018-342
Sheet No. : 1 of 1

HIGHWAY PAVEMENT MARKINGS

INTERSECTION WITH RIGHT TURN LANES

S-2018-343

HIGHWAY_PAVEMENT_MARKINGS

INTERSECTION_WITH_ISLANDS

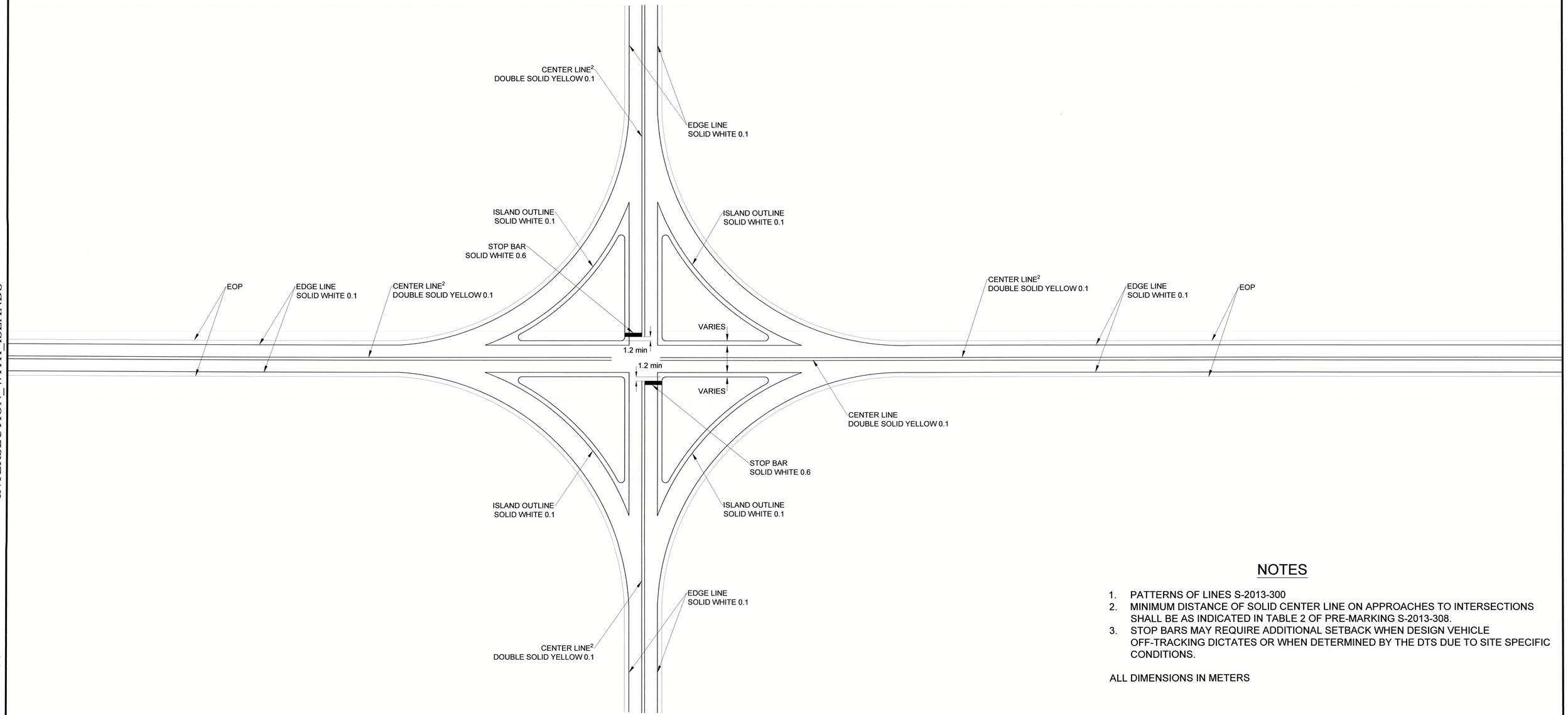

NOTES

1. PATTERNS OF LINES S-2013-300
2. MINIMUM DISTANCE OF SOLID CENTER LINE ON APPROACHES TO INTERSECTIONS SHALL BE AS INDICATED IN TABLE 2 OF PRE-MARKING S-2013-308.
3. STOP BARS MAY REQUIRE ADDITIONAL SETBACK WHEN DESIGN VEHICLE OFF-TRACKING DICTATES OR WHEN DETERMINED BY THE DTS DUE TO SITE SPECIFIC CONDITIONS.

ALL DIMENSIONS IN METERS

Designed by:		Traffic Authority	Date			NOVA SCOTIA Transportation and Infrastructure Renewal	Scale: NTS	HIGHWAY PAVEMENT MARKINGS	INTERSECTION WITH ISLANDS
Surveyed by:							Date: SEPT 2018		
Drawn by: P. HILL		Manager Traffic Engineering and Road Safety	Date NOV 5 '18	MK.	DATE	REVISION	File No. : S-2018-343		
Checked by: R. HIRD							Sheet No. : 1 of 1		
Approved by: M. CROFT									

S-2018-344

HIGHWAY_PAVEMENT_MARKINGS INTERSECTION_WITH_ISLANDS_AND_LEFT_TURN_LANES

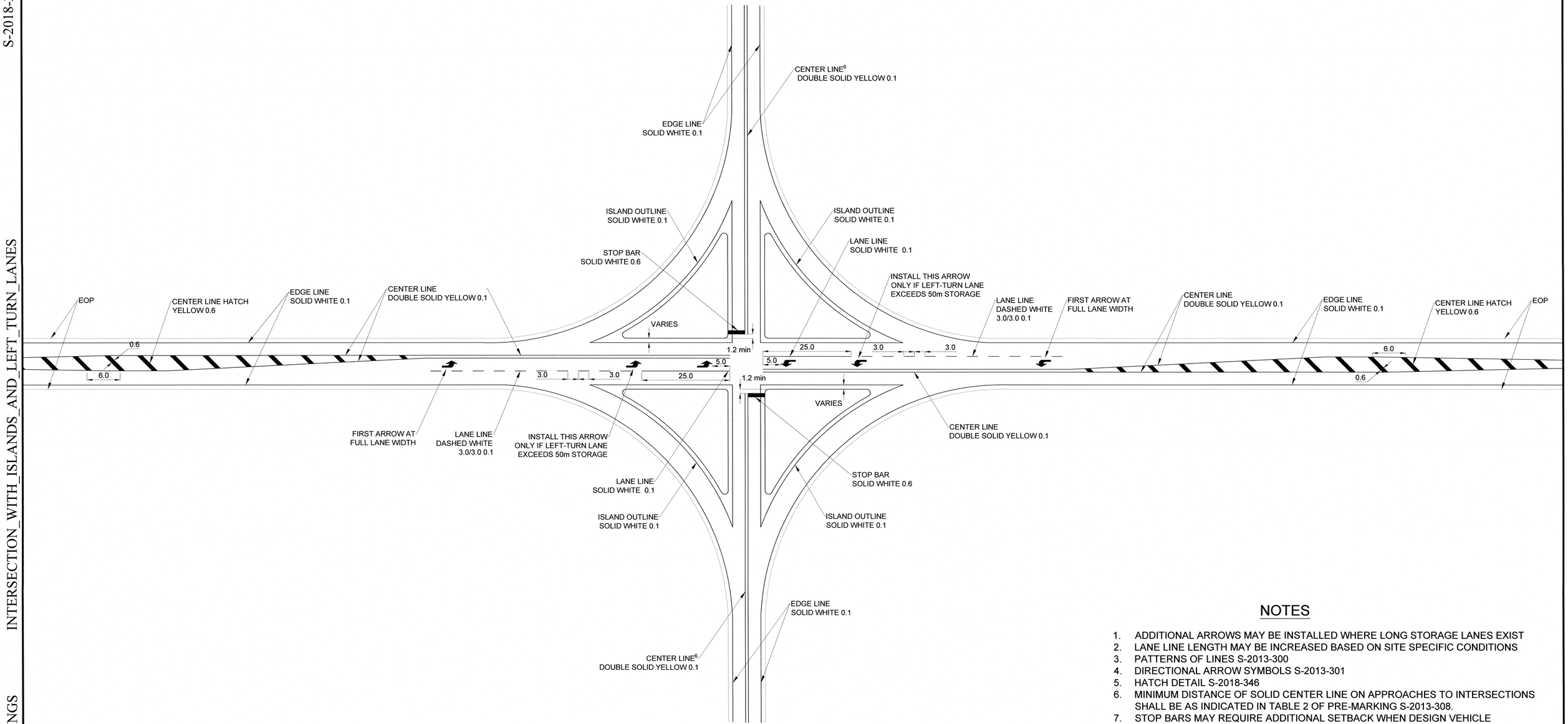

NOTES

1. ADDITIONAL ARROWS MAY BE INSTALLED WHERE LONG STORAGE LANES EXIST
2. LANE LINE LENGTH MAY BE INCREASED BASED ON SITE SPECIFIC CONDITIONS
3. PATTERNS OF LINES S-2013-300
4. DIRECTIONAL ARROW SYMBOLS S-2013-301
5. HATCH DETAIL S-2018-346
6. MINIMUM DISTANCE OF SOLID CENTER LINE ON APPROACHES TO INTERSECTIONS SHALL BE AS INDICATED IN TABLE 2 OF PRE-MARKING S-2013-308.
7. STOP BARS MAY REQUIRE ADDITIONAL SETBACK WHEN DESIGN VEHICLE OFF-TRACKING DICTATES OR WHEN DETERMINED BY THE DTS DUE TO SITE SPECIFIC CONDITIONS.

ALL DIMENSIONS IN METERS

Designed by:		Traffic Authority	Date			NOVA SCOTIA Transportation and Infrastructure Renewal	Scale: NTS	HIGHWAY PAVEMENT MARKINGS
Surveyed by:							Date: SEPT 2018	INTERSECTION WITH ISLANDS AND LEFT TURN LANES
Drawn by: P. HILL		Manager Traffic Engineering and Road Safety	Nov 5/18 Date	MK.	DATE	REVISION	File No. : S-2018-344	
Checked by: R. HIRD							Sheet No. : 1 of 1	
Approved by: M. CROFT								

S-2018-345

HIGHWAY_PAVEMENT_MARKINGS INTERSECTION_WITH_ISLANDS_AND_RIGHT_TURN_LANES

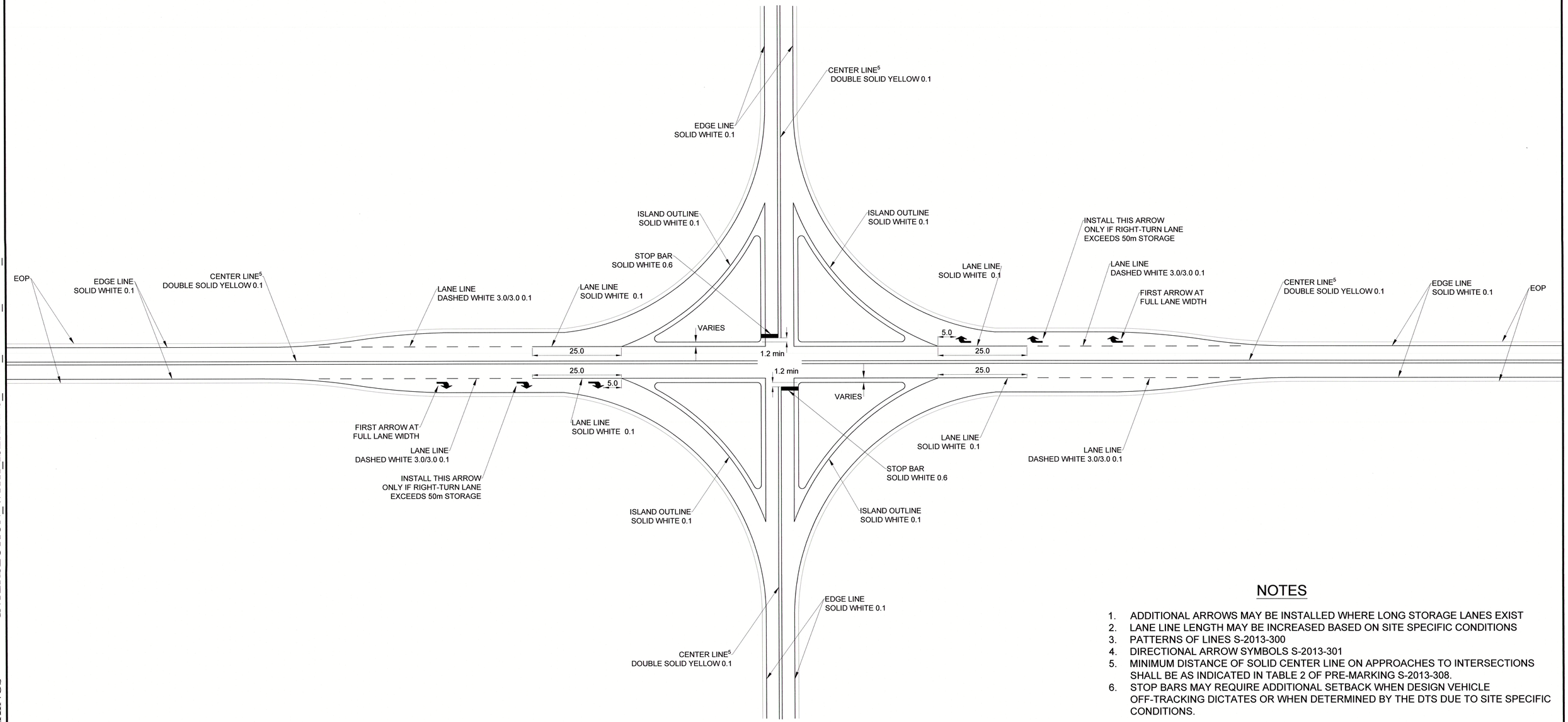

NOTES

1. ADDITIONAL ARROWS MAY BE INSTALLED WHERE LONG STORAGE LANES EXIST
2. LANE LINE LENGTH MAY BE INCREASED BASED ON SITE SPECIFIC CONDITIONS
3. PATTERNS OF LINES S-2013-300
4. DIRECTIONAL ARROW SYMBOLS S-2013-301
5. MINIMUM DISTANCE OF SOLID CENTER LINE ON APPROACHES TO INTERSECTIONS SHALL BE AS INDICATED IN TABLE 2 OF PRE-MARKING S-2013-308.
6. STOP BARS MAY REQUIRE ADDITIONAL SETBACK WHEN DESIGN VEHICLE OFF-TRACKING DICTATES OR WHEN DETERMINED BY THE DTS DUE TO SITE SPECIFIC CONDITIONS.

ALL DIMENSIONS IN METERS

Designed by:		Traffic Authority	Date			NOVA SCOTIA Transportation and Infrastructure Renewal	Scale: NTS
Surveyed by:							Date: SEPT 2018
Drawn by: P. HILL		Manager Traffic Engineering and Road Safety	Nov 5/18	MK.	DATE	REVISION	File No. : S-2018-345
Checked by: R. HIRD			Date				Sheet No. : 1 of 1
Approved by: M. CROFT							

HIGHWAY PAVEMENT MARKINGS

INTERSECTION WITH ISLANDS AND RIGHT TURN LANES

S-2018-346

HATCH_MARKING_DETAIL

HIGHWAY_PAVEMENT_MARKINGS

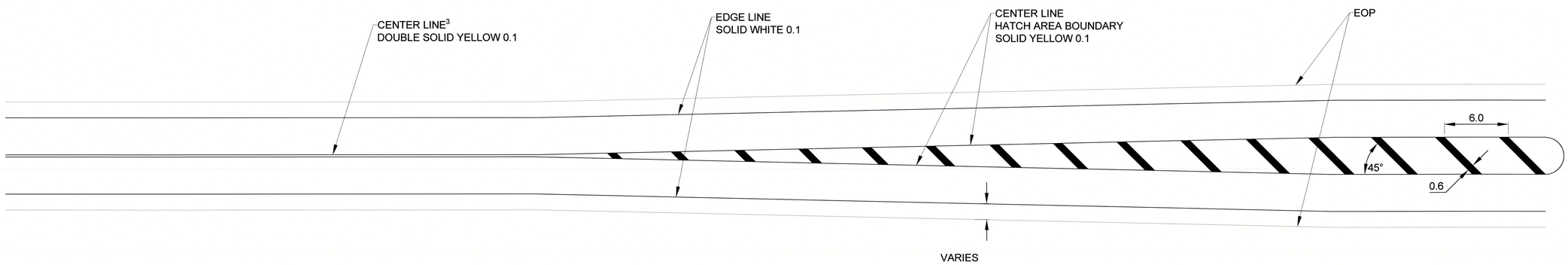

NOTES

1. PATTERNS OF LINES S-2013-300
2. WHERE HATCHED AREA IS SHORT, SPACING BETWEEN BARS MAY BE REDUCED TO LESS THAN 6 m TO A MINIMUM OF 2 m.
3. MINIMUM DISTANCE OF SOLID CENTER LINE ON APPROACHES TO INTERSECTIONS SHALL BE AS INDICATED IN TABLE 2 OF PRE-MARKING S-2013-308.

ALL DIMENSIONS IN METERS

Designed by:		Traffic Authority	Date			NOVA SCOTIA Transportation and Infrastructure Renewal	Scale: NTS	HIGHWAY PAVEMENT MARKINGS	HATCH MARKING DETAILS
Surveyed by:							Date: SEPT 2018		
Drawn by: P. HILL		Manager Traffic Engineering and Road Safety	Nov 5/18	MK.	DATE	REVISION	File No. : S-2018-346		
Checked by: R. HIRD							Sheet No. : 1 of 1		
Approved by: M. CROFT									

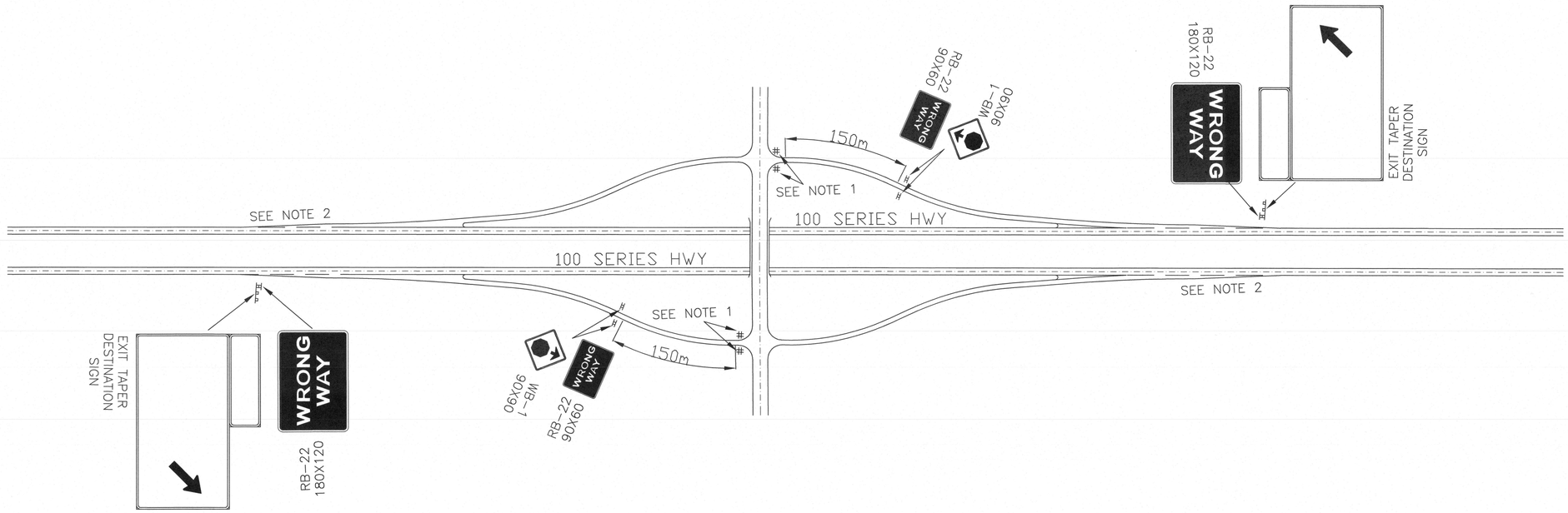

NOTES:

1. FOR STANDARD INTERCHANGE SIGNAGE SEE STANDARD DRAWINGS S-2013-320 TO S-2013-325
2. SEE PROCEDURE PR5093 SIGNAGE AT 100 SERIES ENTRANCE RAMPS

Designed by: B. STORRIE		Traffic Authority — Nov 21/18 Date				Scale: NTS	STANDARD SIGNAGE PLAN
Surveyed by:		Manager, Traffic Engineering + Road Safety — Nov 21/18 Date			NOVA SCOTIA Transportation and Infrastructure Renewal	Date: NOVEMBER 2018	WRONG WAY SIGNAGE DIVIDED HIGHWAY
Drawn by: J. LI						File No. : S-2018-348	
Checked by: R. HIRD, P. HILL						Sheet No. : 1 of 1	
Approved by: M. CROFT			MK.	DATE	REVISION		

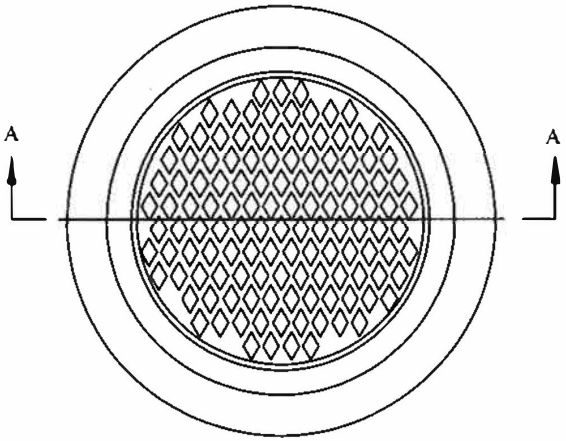

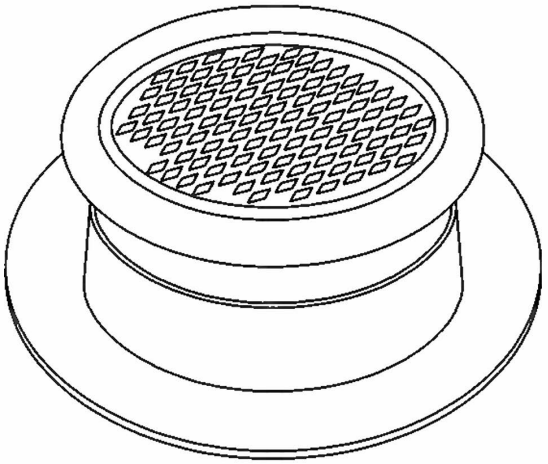

ISOMETRIC VIEW

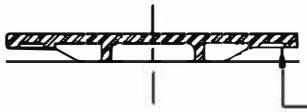

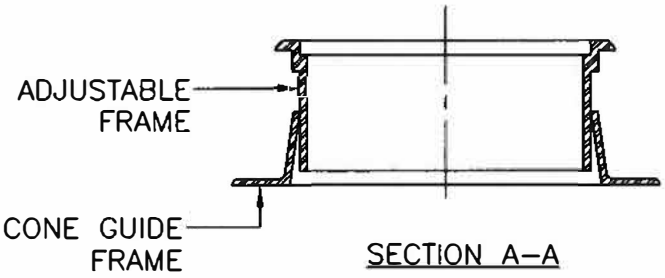

SECTION A–A

NOTES:
1. ALL DIMENSIONS ARE IN MILLIMETRES UNLESS OTHERWISE NOTED.
2. ADJUSTABLE MANHOLE FRAME AND COVERS TO BE INSTALLED AS PER MANUFACTURER'S REQUIREMENTS.
3. CONE GUIDE FRAMES ARE AVAILABLE IN HEIGHTS OF 50 mm, 100 mm, and 150 mm.
4. SQUARE CONE GUIDE FRAMES ARE ALSO AVAILABLE IN HEIGHTS OF 100 mm AND 150 mm.

NOVA SCOTIA
Transportation and Infrastructure Renewal

No.	REVISION

Scale :	N.T.S.
Drawn by :	T.MEEHAN
Checked by :	R.SWINEMAR
Date of Plan :	JULY2019
File No. :	S-2019-064

Manager Highway Planning & Design

Director Highway Engineering Services

Executive Director Highway Engineering and Construction

R-10 ADJUSTABLE MANHOLE FRAME AND COVER

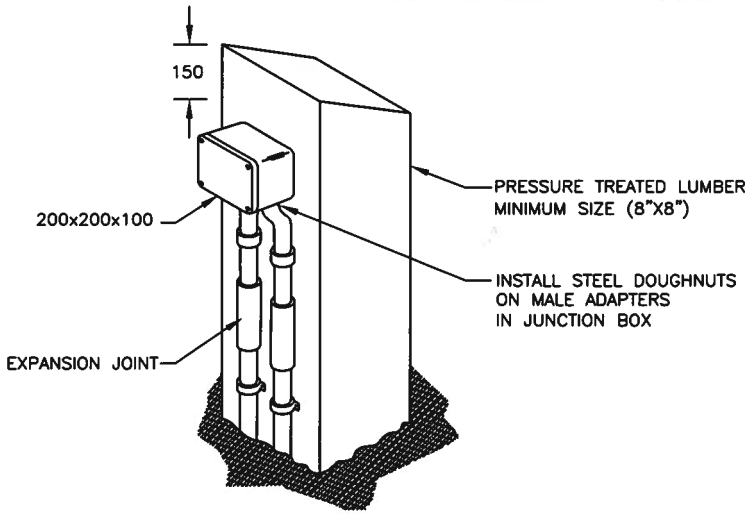

PULLING STATION

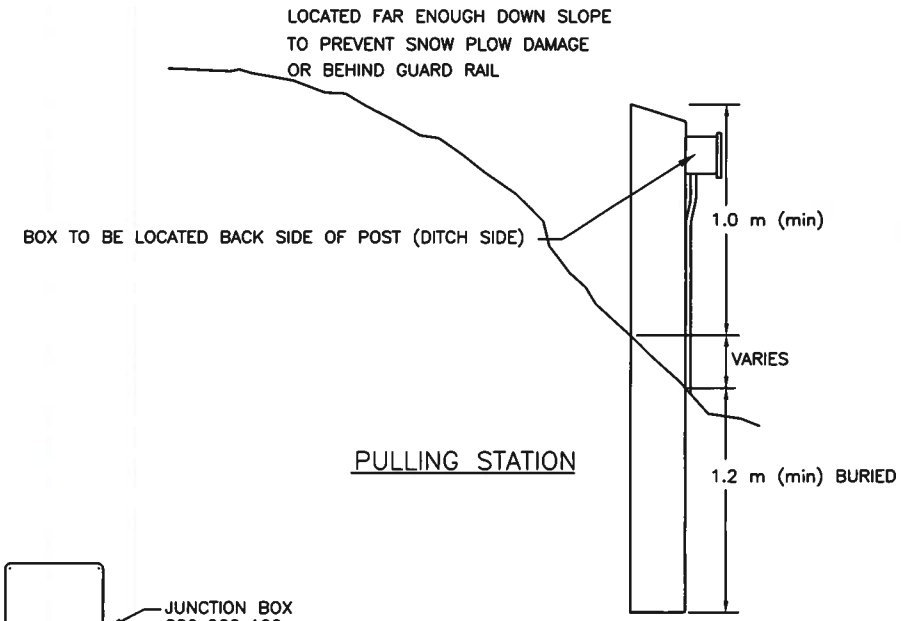

PULLING STATION

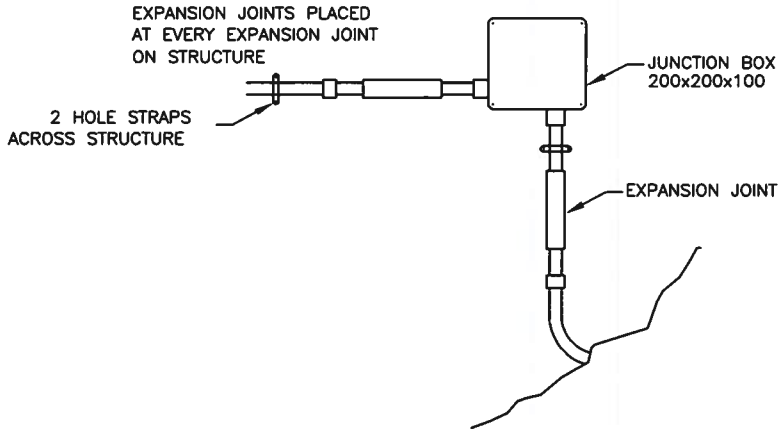

JUNCTION BOX ON STRUCTURE

NOTES:
1. ALL DIMENSIONS ARE IN MILLIMETRES UNLESS OTHERWISE NOTED.

Manager Traffic Engineering and Road Safety

Director Highway Engineering Services and Capital Programs

Executive Director Highway Engineering and Construction

NOVA SCOTIA
Transportation and Infrastructure Renewal

No.	REVISION
1	JB MOVED TO BACK SIDE OF POST

Scale :	N.T.S
Drawn by :	P.HILL
Checked by :	R.HIRD
Date of Plan :	JAN2019
File No. :	S-2019-112

PULL STATION DETAILS HIGHWAY LIGHTING

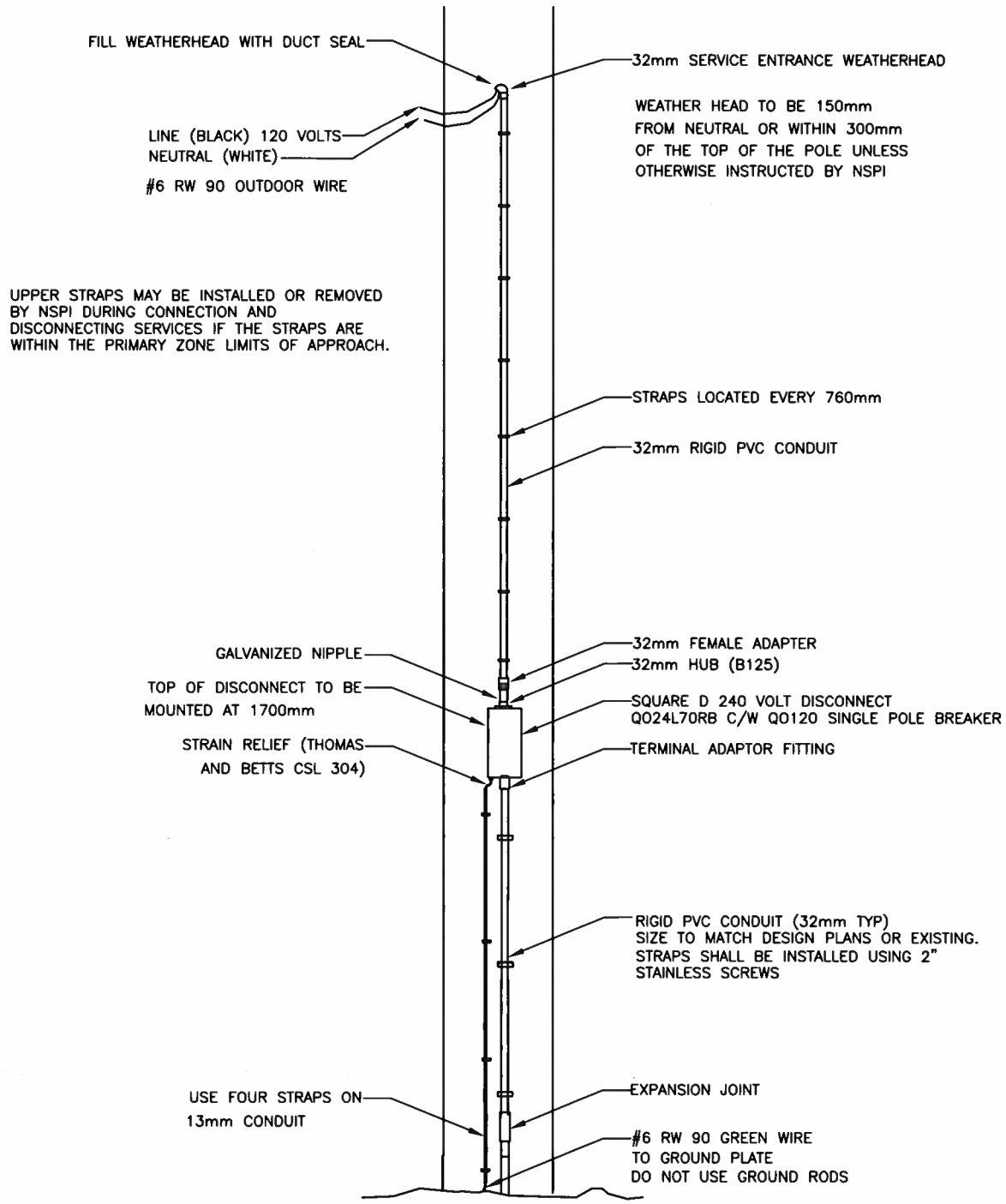

TYPE A SERVICE – 120 VOLT

NOTES:
1. ALL PADLOCKS ARE TO BE MASTER No. 1 WITH KEY No. 2396.
2. ALL PADLOCKS ARE TO BE SUPPLIED BY NSTIR.
3. VOLTAGE LABELS REQUIRED ON DISCONNECT

Scale :	N.T.S.
Drawn by :	P.HILL
Checked by :	K.HARRIS
Date of Plan :	JAN2019
File No. :	S-2019-114

Manager Traffic Engineering and Road Safety

Director Highway Engineering Services and Capital Programs

Executive Director Highway Engineering and Construction

NOVA SCOTIA
Transportation and Infrastructure Renewal

No.	REVISION
2	WEATHERHEAD SIZE CORRECTION
1	PART NUMBER UPDATES / CORRECTIONS

TYPE A SERVICE - 120 VOLT HIGHWAY LIGHTING

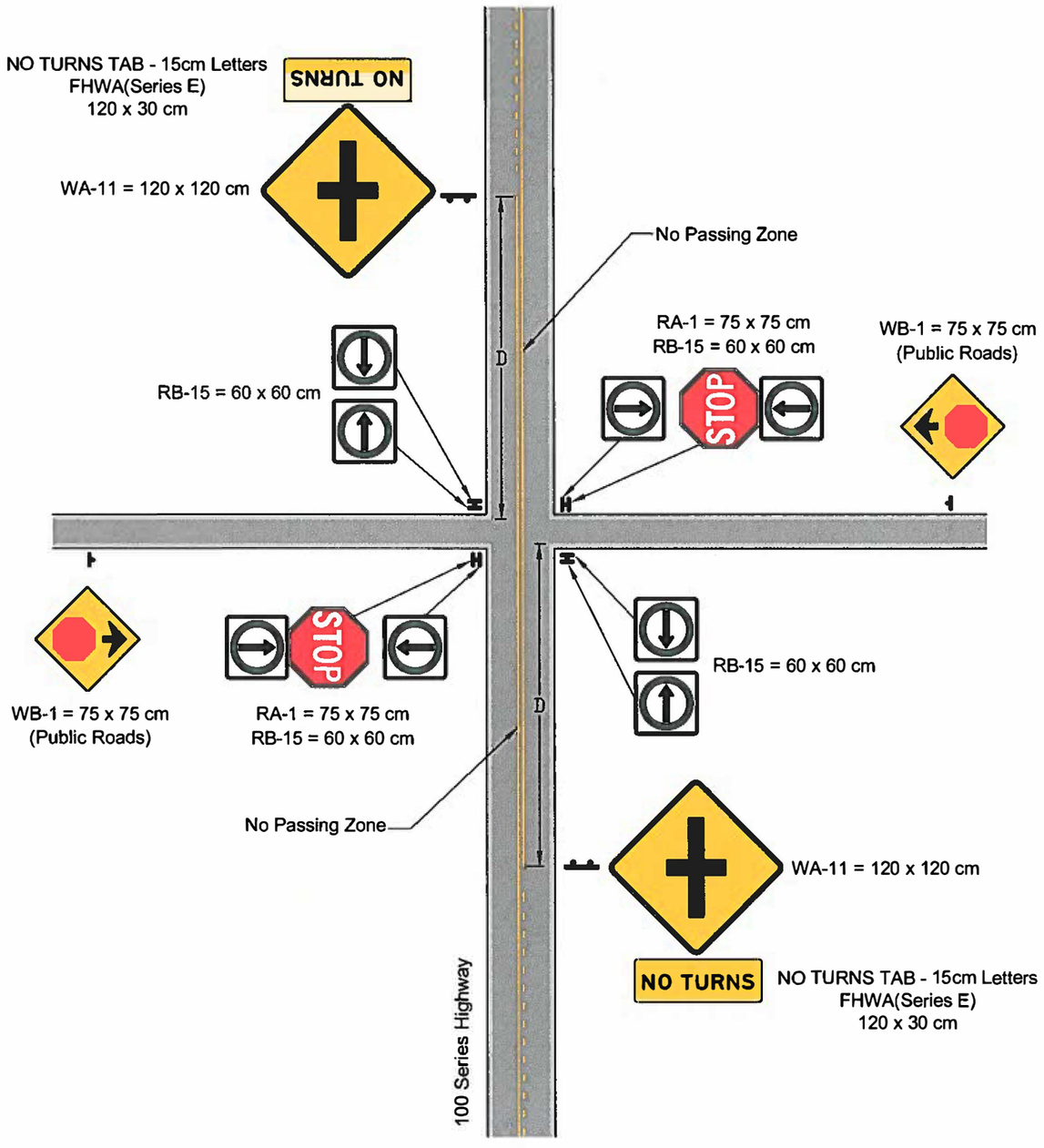

Distance of WA-11 From Intersection and No Passing Zone Length

Posted Speed (km/h)	Distance (D) (m)
100	240
90	200
80	165
70	140
60	120
50	100

NOTE:

OVERHEAD FLASHING BEACONS AT THE INTERSECTION OR FLASHING BEACONS MOUNTED ABOVE THE STOP SIGN MAY BE USED AT THE DISCRETION OF THE DISTRICT TRAFFIC SUPERVISOR.

Designed by:		Deputy Provincial Traffic Authority	Feb 22/19 Date			Scale: NTS	SIGNING AND PAVEMENT MARKINGS
Surveyed by:						Date: FEB. 2019	
Drawn by: J. LI		Manager, Traffic Engineering + Road Safety	Feb 25/19 Date	MK.	DATE	File No.: S-2019-314	FOR NO-TURN INTERSECTION ON 100 SERIES HIGHWAY
Checked by: R. HIRD					REVISION	Sheet No.: 1 of 1	
Approved by:							

NOVA SCOTIA
Transportation and Infrastructure Renewal

Nova Scotia

Department of
Transportation
and Infrastructure Renewal

TENDER

TO THE DEPARTMENT OF TRANSPORTATION AND PUBLIC WORKS , HALIFAX, NOVA SCOTIA: -

The undersigned Bidder has carefully examined the site of the work described herein; has become familiar with local conditions and the character and extent of the work; has carefully examined every part of the proposed Contract and thoroughly understands its stipulations, requirements and provisions.

The undersigned Bidder has determined the quality and quantity of materials required; has investigated the location and determined the sources of supply of the materials required; has investigated labour conditions and has arranged for the continuous prosecution of the work herein described.

The undersigned Bidder hereby agrees to be bound by the award of the Contract and if awarded the Contract on this Tender to execute the required Contract within ten days after notice of award.

The undersigned Bidder further agrees to provide all necessary equipment, tools, labour, incidentals and other means of construction to do all the work, and furnish all the materials of the specified requirements which are necessary to complete the work in accordance with the Contract, and agrees to accept therefor as payment in full the unit prices for the various items described in the Specifications and set forth in the Schedule of Prices in their Tender, and to do all Extra Work which may be required in connection with the construction and completion of the work under the Contract.

The undersigned Bidder understands that the quantities of work shown herein are approximate only and are subject to increase or decrease and agrees that all quantities of work, whether increased or decreased, are to be performed at the unit prices stated in the following Estimate of Quantities and Schedule of Prices for the work described.

Description of Work.

TENDER NO.
PROJECT NO.

Specification (A)	Unit (B)	Estimated Quantity (C)	Unit Price Written Words (D)	Unit Price Figures (E)	Extension (F)
BROUGHT FORWARD $					
02.01.001 Clearing of Highway (Div. 2. Sec. 1)	hectare				
02.01.002 Clearing Special (Div. 2. Sec. 1)	hectare				
02.01.003 Clearing Brush (Div. 2. Sec 1)	hectare				
02.01.010 Trees Remove (Div 2. Sec 1)	each				
02.01.011 Trees Relocate (Div 2. Sec.1)	each				
02.01.012 Trees Plant (Div. 2 Sec. 1)	each				
02.02.001 Grubbing of Highway (Div. 2. Sec. 2)	hectare				
02.02.002 Grubbing Special (Div. 2. Sec. 2)	hectare				
02.03.001 Excavation Roadway & Drainage Common (Div. 2 Sec. 3)	cubic metre				
02.03.002 Excavation Swamp (Div. 2 Sec. 3)	cubic metre				
CARRIED FORWARD $					

Note ! Column "D" to be completed in written form. Column "E" to be completed in numerical form . Column "F" to be completed in numerical form.

WHERE THERE IS A CONFLICT WRITTEN WORD WILL GOVERN

SPECIFICATION (A) DESCRIPTION MAY NOT BE IDENTICAL TO "PARAGRAPH" DESCRIPTION IN STANDARD SPECIFICATION

Specification (A)	Unit (B)	Estimated Quantity (C)	Unit Price Written Words (D)	Unit Price Figures (E)	Extension (F)
			BROUGHT FORWARD $		
02.03.003 Excavation Solid Rock (Div. 2 Sec. 3)	cubic metre				
02.03.004 Excavation Unclassified (Spec. Prov.)	cubic metre				
02.03.007 Ditching (Div. 3 Sec. 2)	metre				
02.03.010 Overhaul 300m - 599m (Div.2 Sec.3)	cubic metre		FIFTY CENTS	0.50	
02.03.011 Overhaul: 600m - 899m (Div. 2 Sec. 3)	cubic metre		SIXTY-ONE CENTS	0.61	
02.03.012 Overhaul: 900m -1199m (Div. 2 Sec. 3)	cubic metre		SEVENTY-TWO CENTS	0.72	
02.03.013 Overhaul: 1200m - 1499m (Div. 2 Sec. 3)	cubic metre		ONE DOLLAR AND ONE CENTS	1.01	
02.03.014 Overhaul: 1500m - 1799m (Div. 2 Sec. 3)	cubic metre		ONE DOLLAR AND EIGHTEEN CENTS	1.18	
02.03.015 Overhaul: 1800m - 3199m (Div. 2 Sec. 3)	cubic metre		ONE DOLLAR AND FIFTY-NINE CENTS	1.59	
02.03.016 Overhaul: 3200m - 4799m (Div. 2 Sec. 3)	cubic metre		ONE DOLLAR AND NINETY-EIGHT CENTS	1.98	
			CARRIED FORWARD $		

Note ! Column "D" to be completed in written form. Column "E" to be completed in numerical form . Column "F" to be completed in numerical form.

WHERE THERE IS A CONFLICT WRITTEN WORD WILL GOVERN

SPECIFICATION (A) DESCRIPTION MAY NOT BE IDENTICAL TO "PARAGRAPH" DESCRIPTION IN STANDARD SPECIFICATION

Specification (A)	Unit (B)	Estimated Quantity (C)	Unit Price Written Words (D)	Unit Price Figures (E)	Extension (F)
BROUGHT FORWARD $					
02.03.017 Overhaul: 4800m - 6399m (Div. 2 Sec. 3)	cubic metre		TWO DOLLARS AND THIRTY-SEVEN CENTS	2.37	
02.03.018 Overhaul: 6400m plus	cubic metre				
02.05.001 Borrow (Div. 2 Sec. 5)	cubic metre				
02.05.002 Borrow (Div.2 Sec.5)	tonne				
02.08.001 Compaction (Div. 2 Sec. 8)	cubic metre				
02.09.001 Water Compaction & Dust Control (Div. 2 Sec. 9)	kilolitre				
02.10.001 Grading Rough (Div. 2 Sec. 10)	square metre				
02.11.001 Grading Fine (Div. 2 Sec. 11)	square metre				
02.12.001 Excavation Foundation Common (Div. 2 Sec. 12)	cubic metre				
02.12.002 Excavation Foundation Solid Rock (Div. 2 Sec. 12)	cubic metre				
CARRIED FORWARD $					

Note ! Column "D" to be completed in written form. Column "E" to be completed in numerical form . Column "F" to be completed in numerical form.

WHERE THERE IS A CONFLICT WRITTEN WORD WILL GOVERN

SPECIFICATION (A) DESCRIPTION MAY NOT BE IDENTICAL TO "PARAGRAPH" DESCRIPTION IN STANDARD SPECIFICATION

Specification (A)	Unit (B)	Estimated Quantity (C)	Unit Price Written Words (D)	Unit Price Figures (E)	Extension (F)
BROUGHT FORWARD $					
02.13.001 Excavation Foundation Common for Bridges (Div. 2 Sec. 13)	cubic metre				
02.13.002 Excavation Foundation Solid Rock for Bridges (Div. 2 Sec. 13)	cubic metre				
02.13.003 Excavation Foundation Unclassified (Div. 2 Sec. 13)	cubic metre				
02.13.004 Excavation Foundation Unclassified/ Bridges (Div. 2 Sec. 13)	cubic metre				
03.01.001 Gravel Borrow (Div. 3 Sec. 1)	tonne				
03.02.001 Gravel Type 1S (MS) (Div. 3 Sec. 2)	tonne				
03.02.002 Gravel Type 1 (MS) (Div. 3 Sec. 2)	tonne				
03.02.003 Gravel Type 2 (MS) (Div. 3 Sec. 2)	tonne				
03.02.004 Gravel Type 2 (MS) In Stockpile (Div. 3 Sec. 2)	tonne				
03.02.005 Gravel Type 1 (MS) In Stockpile (Div. 3 Sec. 2)	tonne				
CARRIED FORWARD $					

Note ! Column "D" to be completed in written form. Column "E" to be completed in numerical form . Column "F" to be completed in numerical form.

WHERE THERE IS A CONFLICT WRITTEN WORD WILL GOVERN

SPECIFICATION (A) DESCRIPTION MAY NOT BE IDENTICAL TO "PARAGRAPH" DESCRIPTION IN STANDARD SPECIFICATION

Specification (A)	Unit (B)	Estimated Quantity (C)	Unit Price Written Words (D)	Unit Price Figures (E)	Extension (F)
BROUGHT FORWARD $					
03.02.006 Gravel Type M (MS) (Div. 3 Sec. 2)	tonne				
03.02.009 Gravels Quarried Stone Driveway (Div. 3 Sec. 2)	tonne				
03.02.010 Gravels Crusher Dust Driveway (Div. 3 Sec. 2)	tonne				
03.02.015 Aggregate Corr - Full Depth Reclamation (Div. 3 Sec. 2)	tonne				
03.03.001 Slag Type 1S (Div. 3 Sec. 3)	tonne				
03.03.002 Slag Type 1 (Div. 3 Sec. 3)	tonne				
03.03.003 Slag Type 2 (Div. 3 Sec. 3)	tonne				
03.04.001 Clear Stone, C1 (Div. 3 Sec. 4)	tonne				
03.04.002 Clear Stone, C2 (Div. 3 Sec. 4)	tonne				
03.04.003 Clear Stone, C3 (Div. 3 Sec. 4)	tonne				
CARRIED FORWARD $					

Note ! Column "D" to be completed in written form. Column "E" to be completed in numerical form . Column "F" to be completed in numerical form.

WHERE THERE IS A CONFLICT WRITTEN WORD WILL GOVERN

SPECIFICATION (A) DESCRIPTION MAY NOT BE IDENTICAL TO "PARAGRAPH" DESCRIPTION IN STANDARD SPECIFICATION

Specification (A)	Unit (B)	Estimated Quantity (C)	Unit Price Written Words (D)	Unit Price Figures (E)	Extension (F)
			BROUGHT FORWARD $		
03.04.004 Clear Stone, C4 (Div. 3 Sec. 4)	tonne				
03.04.005 Clear Stone, C5 (Div. 3 Sec. 4)	tonne				
03.06.001 Rip-Rap Loose Laid (Div. 3 Sec. 6)	cubic metre				
03.06.002 Rip-Rap Loose Laid (Div. 3 Sec. 6)	tonne				
03.07.001 Rip-Rap Hand Laid (Div. 3 Sec.7)	cubic metre				
03.08.001 Armour Rock, R1 (Div. 3 Sec.8)	cubic metre				
03.08.002 Armour Rock, R2 (Div. 3 Sec.8)	cubic metre				
03.08.003 Armour Rock, R1 (Div. 3 Sec.8)	tonne				
03.08.004 Armour Rock, R2 (Div. 3 Sec.8)	tonne				
03.09.001 Rock Fill (Div. 3 Sec.9)	cubic metre				
			CARRIED FORWARD $		

Note ! Column "D" to be completed in written form. Column "E" to be completed in numerical form . Column "F" to be completed in numerical form.

WHERE THERE IS A CONFLICT WRITTEN WORD WILL GOVERN

SPECIFICATION (A) DESCRIPTION MAY NOT BE IDENTICAL TO "PARAGRAPH" DESCRIPTION IN STANDARD SPECIFICATION

Specification (A)	Unit (B)	Estimated Quantity (C)	Unit Price Written Words (D)	Unit Price Figures (E)	Extension (F)
			BROUGHT FORWARD $		
03.09.002 Rock Fill (Div. 3 Sec.9)	tonne				
03.10.001 Fill Against Structure (Div. 3 Sec.10)	tonne				
03.11.001 Unshrinkable Backfill (Div. 3 Sec. 11)	cubic metre				
03.12.001 Gravel Type 1S (EPS) (Div. 3 Sec. 12)	tonne				
03.12.002 Gravel Type 1 (EPS) (Div. 3 Sec. 12)	tonne				
03.12.003 Gravel Type 2 (EPS) (Div. 3 Sec. 12)	tonne				
03.12.004 Gravel Type 2 (EPS) In Stockpile (Div. 3 Sec. 12)	tonne				
03.12.005 Gravel Type 1 (EPS) In Stockpile (Div. 3 Sec. 12)	tonne				
03.12.006 Gravel Type M (EPS) (Div. 3 Sec. 12)	tonne				
04.01.001 Emulsified Asphalt Tack (Div. 4 Sec. 1)	litre				
			CARRIED FORWARD $		

Note ! Column "D" to be completed in written form. Column "E" to be completed in numerical form . Column "F" to be completed in numerical form.

WHERE THERE IS A CONFLICT WRITTEN WORD WILL GOVERN

SPECIFICATION (A) DESCRIPTION MAY NOT BE IDENTICAL TO "PARAGRAPH" DESCRIPTION IN STANDARD SPECIFICATION

Specification (A)	Unit (B)	Estimated Quantity (C)	Unit Price Written Words (D)	Unit Price Figures (E)	Extension (F)
			BROUGHT FORWARD $		
04.01.002 Emulsified Asphalt RAC Paving (Div. 4 Sec. 1)	litre				
04.02.001 Asphalt Binder PGAB PG58-28 (Div. 4 Sec. 2)	tonne				
04.02.002 Asphalt Binder PGAB PG64-28 (Div. 4 Sec. 2)	tonne				
04.02.003 Asphalt Binder PGAB PG70-28 (Div. 4 Sec. 2)	tonne				
04.02.004 Asphalt Binder PGAB PG58-28 FDR (Div. 4 Sec. 2)	tonne				
04.02.005 Liquid Asphalt FDR (Div. 4 Sec. 2)	tonne				
04.03.001 Asphalt Curb (MS) (Div. 4 Sec. 3)	metre				
04.03.002 Asphalt Curb (EPS) (Div. 4 Sec. 3)	metre				
04.03.003 Asphalt Gutters (MS) (Div. 4 Sec. 3)	metre				
04.03.004 Asphalt Gutters (EPS) (Div. 4 Sec. 3)	metre				
			CARRIED FORWARD $		

Note ! Column "D" to be completed in written form. Column "E" to be completed in numerical form . Column "F" to be completed in numerical form.

WHERE THERE IS A CONFLICT WRITTEN WORD WILL GOVERN

SPECIFICATION (A) DESCRIPTION MAY NOT BE IDENTICAL TO "PARAGRAPH" DESCRIPTION IN STANDARD SPECIFICATION

Specification (A)	Unit (B)	Estimated Quantity (C)	Unit Price Written Words (D)	Unit Price Figures (E)	Extension (F)
				BROUGHT FORWARD $	
04.04.001 Asphalt Mix Type 'B' PG58-28 (MS) (Div. 4 Sec. 4)	tonne				
04.04.003 Asphalt Mix Type 'B-HF' PG58-28 (MS) (Div. 4 Sec. 4)	tonne				
04.04.010 Asphalt Mix Type 'C' PG58-28 (MS) (Div. 4 Sec. 4)	tonne				
04.04.012 Asphalt Mix Type 'C-HF' PG58-28 (MS) (Div. 4 Sec. 4)	tonne				
04.04.014 Asphalt Mix Type 'C-HF' PG64-28 (MS) (Div. 4 Sec. 4)	tonne				
04.04.020 Asphalt Mix Type 'D' PG58-28 (MS) (Div. 4 Sec. 4)	tonne				
04.04.022 Asphalt Mix Type 'D-HF' PG58-28 (MS) (Div. 4 Sec. 4)	tonne				
04.04.024 Asphalt Mix Type 'D-HF' PG64-28 (MS) (Div. 4 Sec. 4)	tonne				
04.04.031 Asphalt Cold In-Place Recycling (Spec. Prov.)	square metre				
04.04.032 Asphalt Full Depth Reclamation (Spec. Prov.)	square metre				
				CARRIED FORWARD $	

Note ! Column "D" to be completed in written form. Column "E" to be completed in numerical form . Column "F" to be completed in numerical form.

WHERE THERE IS A CONFLICT WRITTEN WORD WILL GOVERN

SPECIFICATION (A) DESCRIPTION MAY NOT BE IDENTICAL TO "PARAGRAPH" DESCRIPTION IN STANDARD SPECIFICATION

Specification (A)	Unit (B)	Estimated Quantity (C)	Unit Price Written Words (D)	Unit Price Figures (E)	Extension (F)
			BROUGHT FORWARD $		
04.04.033 Asphalt Partial Depth Reclamation (Spec. Prov.)	square metre				
04.04.034 Asphalt Mix Rubber Modified (Div.4 Sec.4)	tonne				
04.04.036 Portland Cement for Reclamation (Div.4 Sec 4)	tonne				
04.05.001 Asphalt Primer (Div. 4 Sec. 5)	litre				
04.05.002 Asphalt Primer Sand Seal (Div. 4 Sec. 5)	kilolitre				
04.06.001 Asphalt Concrete Removal (Div. 4 Sec. 6)	square metre				
04.06.002 Asphalt Concrete Removal/Cold Planing Patching (Div. 4 Sec. 6)	square metre				
04.06.005 Cold Planing (Div. 4 Sec. 6)	square metre				
04.06.006 Cold Planing Cracks (Div. 4 Sec. 6)	square metre				
04.06.007 Cold Planing Full Depth (Div. 4 Sec. 6)	square metre				
			CARRIED FORWARD $		

Note ! Column "D" to be completed in written form. Column "E" to be completed in numerical form . Column "F" to be completed in numerical form.

WHERE THERE IS A CONFLICT WRITTEN WORD WILL GOVERN

SPECIFICATION (A) DESCRIPTION MAY NOT BE IDENTICAL TO "PARAGRAPH" DESCRIPTION IN STANDARD SPECIFICATION

Specification (A)	Unit (B)	Estimated Quantity (C)	Unit Price Written Words (D)	Unit Price Figures (E)	Extension (F)
			BROUGHT FORWARD $		
04.06.010 Pulverization (Spec. Prov.)	square metre				
04.06.015 Rumble Strips - Continuous (Div. 4 Sec. 7)	metre				
04.07.001 Asphalt Concrete Patching (MS) (Div. 4 Sec. 7)	tonne				
04.07.002 Asphalt Concrete Patching (EPS) (Div. 4 Sec. 7)	tonne				
04.08.001 Asphalt Concrete Paving of Bridge Decks (Div. 4 Sec. 8)	tonne				
04.11.001 Crack Filling and Crack Sealing (EPWS) (Div. 4 Sec. 11)	metre				
04.11.002 Crack Filling and Crack Sealing PC Concrete (Div. 4 Sec. 11)	metre				
04.12.001 Seal Coat Type A (EPWS) (Div. 4 Sec. 12)	square metre				
04.12.002 Seal Coat Type B (EPWS) (Div. 4 Sec. 12)	square metre				
04.13.001 Reclaimed Asphalt Concrete (Div. 4 Sec. 13)	square metre				
			CARRIED FORWARD $		

Note ! Column "D" to be completed in written form. Column "E" to be completed in numerical form . Column "F" to be completed in numerical form.

WHERE THERE IS A CONFLICT WRITTEN WORD WILL GOVERN

SPECIFICATION (A) DESCRIPTION MAY NOT BE IDENTICAL TO "PARAGRAPH" DESCRIPTION IN STANDARD SPECIFICATION

Specification (A)	Unit (B)	Estimated Quantity (C)	Unit Price Written Words (D)	Unit Price Figures (E)	Extension (F)
			BROUGHT FORWARD $		
04.14.001 Sand Seal Surface Treatment (Div. 4 Sec. 14)	cubic metre				
04.15.001 Cold Mix For Winter Patching (Div. 4 Sec. 15)	tonne				
04.16.001 Micro-Surfacing (EPWS) (Div. 4 Sec. 16)	square metre				
04.17.001 P C Concrete Pavement (Div. 4 Sec. 17)	square metre				
04.17.002 Granular Subbase For P C Concrete (Div. 4 Sec. 17)	tonne				
04.17.003 P C Concrete Pavement Removal (Div. 4 Sec. 17)	square metre				
04.17.004 P C Concrete Inlay (Div. 4 Sec. 17)	square metre				
04.17.005 P C Concrete Full Depth Repair (Div. 4 Sec. 17)	square metre				
04.17.006 P C Concrete Partial Depth Repair (Div. 4 Sec. 17)	square metre				
04.18.001 Roller Compacted Concrete (Div. 4 Sec. 18)	square metre				
			CARRIED FORWARD $		

Note ! Column "D" to be completed in written form. Column "E" to be completed in numerical form . Column "F" to be completed in numerical form.

WHERE THERE IS A CONFLICT WRITTEN WORD WILL GOVERN

SPECIFICATION (A) DESCRIPTION MAY NOT BE IDENTICAL TO "PARAGRAPH" DESCRIPTION IN STANDARD SPECIFICATION

Specification (A)	Unit (B)	Estimated Quantity (C)	Unit Price Written Words (D)	Unit Price Figures (E)	Extension (F)
			BROUGHT FORWARD $		
04.19.001 Asphalt Mix Type B PG58-28 (EPS) (Div.4 Sec.19)	tonne				
04.19.003 Asphalt Mix Type B-HF PG58-28 (EPS) (Div.4 Sec.19)	tonne				
04.19.011 Asphalt Mix Type C PG58-28 (EPS) (Div.4 Sec.19)	tonne				
04.19.013 Asphalt Mix Type C-HF PG58-28 (EPS) (Div.4 Sec.19)	tonne				
04.19.015 Asphalt Mix Type C-HF PG64-28 (EPS) (Div.4 Sec.19)	tonne				
04.19.024 Asphalt Mix Type D PG58-28 (EPS) (Div.4 Sec.19)	tonne				
04.19.026 Asphalt Mix Type D-HF PG58-28 (EPS) (Div.4 Sec.19)	tonne				
04.19.028 Asphalt Mix Type D-HF PG64-28 (EPS) (Div.4 Sec.19)	tonne				
05.01.001 Piles Timber (Div. 5 Sec. 1)	metre				
05.01.004 Piles Steel H (Div. 5 Sec. 1)	lump sum				
			CARRIED FORWARD $		

Note ! Column "D" to be completed in written form. Column "E" to be completed in numerical form
. Column "F" to be completed in numerical form.

WHERE THERE IS A CONFLICT WRITTEN WORD WILL GOVERN

SPECIFICATION (A) DESCRIPTION MAY NOT BE IDENTICAL TO "PARAGRAPH" DESCRIPTION IN STANDARD SPECIFICATION

Specification (A)	Unit (B)	Estimated Quantity (C)	Unit Price Written Words (D)	Unit Price Figures (E)	Extension (F)
			BROUGHT FORWARD $		
05.01.007 Piles Steel H - Delivered (Div. 5 Sec. 1)	metre				
05.01.009 Piles Steel H - Driven (Div. 5 Sec. 1)	metre				
05.01.011 Piles Steel H - Repair (Div. 5 Sec. 1)	each				
05.01.013 Piles Steel Sheet (Div. 5 Sec. 1)	lump sum				
05.01.015 Piles Steel Sheet Delivered (Div. 5 Sec.1)	square metre				
05.01.017 Piles Steel Sheet Driven (Div. 5 Sec.1)	square metre				
05.01.019 Piles Steel Pipe (Div. 5 Sec.1)	lump sum				
05.01.021 Piles Steel Pipe Delivered (Div. 5 Sec.1)	metre				
05.01.023 Piles Steel Pipe Driven (Div. 5 Sec.1)	metre				
05.01.025 Cathodic Protection (Div. 5 Sec.1)	lump sum				
05.02.002 Timber Structures (Div. 5 Sec. 2)	cubic metre				
			CARRIED FORWARD $		

Note ! Column "D" to be completed in written form. Column "E" to be completed in numerical form . Column "F" to be completed in numerical form.

WHERE THERE IS A CONFLICT WRITTEN WORD WILL GOVERN

SPECIFICATION (A) DESCRIPTION MAY NOT BE IDENTICAL TO "PARAGRAPH" DESCRIPTION IN STANDARD SPECIFICATION

Specification (A)	Unit (B)	Estimated Quantity (C)	Unit Price Written Words (D)	Unit Price Figures (E)	Extension (F)
			BROUGHT FORWARD $		
05.02.004 Timber Crib Work (Div. 5 Sec.2)	cubic metre				
05.02.006 Timber Pressure Treated (Div. 5 Sec. 2)	cubic metre				
05.02.008 Timber Undressed (Div. 5 Sec. 2)	cubic metre				
05.02.010 Timber Creosote Supply & Place (Div. 5 Sec. 2)	metre				
05.02.012 Timber Bridge Deck Replace (Div. 5 Sec. 2)	lump sum				
05.02.014 Timber Bridge Rehab (Div. 5 Sec. 2)	lump sum				
05.02.016 Timber Crib Abutment (Div. 5 Sec. 2)	lump sum				
05.03.001 Structural Steel (Div.5 Sec.3)	kilogram				
05.03.002 Structural Steel Miscellaneous (Div.5 Sec.3)	kilogram				
05.03.004 Structural Steel Repair (Div.5 Sec.3)	metre				
05.03.006 Structural Steel Galvanized (Div.5 Sec.3)	lump sum				
			CARRIED FORWARD $		

Note ! Column "D" to be completed in written form. Column "E" to be completed in numerical form . Column "F" to be completed in numerical form.

WHERE THERE IS A CONFLICT WRITTEN WORD WILL GOVERN

SPECIFICATION (A) DESCRIPTION MAY NOT BE IDENTICAL TO "PARAGRAPH" DESCRIPTION IN STANDARD SPECIFICATION

Specification (A)	Unit (B)	Estimated Quantity (C)	Unit Price Written Words (D)	Unit Price Figures (E)	Extension (F)
			BROUGHT FORWARD $		
05.04.001 Miscellaneous Metal (Div.5 Sec.4)	kilogram				
05.04.002 Miscellaneous Metal Deck Drains (Div.5 Sec.4)	each				
05.04.003 Hand Rail Steel Galvanized (Div.5 Sec.4)	metre				
05.05.001 Reinforcing Steel Uncoated Delivered (Div.5 Sec.5)	kilogram				
05.05.002 Reinforcing Steel Uncoated Placed (Div.5 Sec.5)	kilogram				
05.05.003 Reinforcing Steel Epoxy Coated Delivered (Div. 5 Sec. 5)	kilogram				
05.05.004 Reinforcing Steel Epoxy Coated Placed (Div.5 Sec. 5)	kilogram				
05.05.005 Reinforcing Steel Galvanized (Div.5 Sec. 5)	kilogram				
05.05.006 Reinforcing Steel Uncoated (Div.5 Sec. 5)	kilogram				
05.06.001 Guard Rail Steel (Div. 5 Sec.6)	metre				
05.06.003 Guard Rail Steel for Column Protection (Div. 5 Sec. 6)	metre				
			CARRIED FORWARD $		

Note ! Column "D" to be completed in written form. Column "E" to be completed in numerical form . Column "F" to be completed in numerical form.

WHERE THERE IS A CONFLICT WRITTEN WORD WILL GOVERN

SPECIFICATION (A) DESCRIPTION MAY NOT BE IDENTICAL TO "PARAGRAPH" DESCRIPTION IN STANDARD SPECIFICATION

Specification (A)	Unit (B)	Estimated Quantity (C)	Unit Price Written Words (D)	Unit Price Figures (E)	Extension (F)
			BROUGHT FORWARD $		
05.06.006 Guard Rail Steel for Bridge Approach (Div. 5 Sec. 6)	metre				
05.06.009 Guard Rail Steel Remove (Div. 5 Sec. 6)	metre				
05.06.012 Guard Rail Steel Adjust (Div. 5 Sec. 6)	metre				
05.06.014 Guard Rail Sections Remove/Replace (Div. 5 Sec.6)	metre				
05.06.016 Guard Rail Double Cable (Div. 5 Sec.6)	metre				
05.06.018 Guard Rail Double Cable Remove (Div. 5 Sec.6)	metre				
05.06.020 Guard Rail Double Cable Adjust (Div. 5 Sec.6)	metre				
05.06.022 Guard Rail Steel Remove/Replace (Div. 5 Sec.6)	metre				
05.06.024 Guard Rail Steel Galvanized Posts (Div. 5 Sec.6)	metre				
05.06.026 Guard Rail Steel Blocked (Div. 5 Sec.6)	metre				
05.06.028 Guard Rail Double Steel (Div. 5 Sec.6)	metre				
			CARRIED FORWARD $		

Note ! Column "D" to be completed in written form. Column "E" to be completed in numerical form . Column "F" to be completed in numerical form.

WHERE THERE IS A CONFLICT WRITTEN WORD WILL GOVERN

SPECIFICATION (A) DESCRIPTION MAY NOT BE IDENTICAL TO "PARAGRAPH" DESCRIPTION IN STANDARD SPECIFICATION

Specification (A)	Unit (B)	Estimated Quantity (C)	Unit Price Written Words (D)	Unit Price Figures (E)	Extension (F)
			BROUGHT FORWARD $		
05.06.031 Guard Rail Posts Remove/Replace (Div. 5 Sec.6)	each				
05.06.033 Guard Rail Cable Remove/Replace (Div. 5 Sec.6)	metre				
05.06.035 Guard Rail Protection / Highway Signs (Div. 5 Sec.6)	metre				
05.06.037 Guard Rail End Treatment System (Div. 5 Sec.6)	each				
05.06.038 Guard Rail Crash Cushion (Div. 5 Sec.6)	each				
05.06.039 Guard Rail Strong Posts (Div. 5 Sec.6)	metre				
05.06.040 Guard Rail Modified Thrie Beam (Div. 5 Sec.6)	metre				
05.06.042 Guard Rail Steel on Bridge (Div. 5 Sec.6)	metre				
05.06.044 Guard Rail Remove Sold Under Guard Rail (Div. 5 Sec.6)	metre				
05.06.046 Guard Rail Restoration (Div. 5 Sec.6)	metre				
05.06.048 Guide Posts Wood Place (Div. 5 Sec. 6)	each				
			CARRIED FORWARD $		

Note ! Column "D" to be completed in written form. Column "E" to be completed in numerical form . Column "F" to be completed in numerical form.

WHERE THERE IS A CONFLICT WRITTEN WORD WILL GOVERN

SPECIFICATION (A) DESCRIPTION MAY NOT BE IDENTICAL TO "PARAGRAPH" DESCRIPTION IN STANDARD SPECIFICATION

Specification (A)	Unit (B)	Estimated Quantity (C)	Unit Price Written Words (D)	Unit Price Figures (E)	Extension (F)
			BROUGHT FORWARD $		
05.06.049 Guide Posts Flexible Place (Div. 5 Sec. 6)	each				
05.06.051 Guide Posts Wood Remove (Div. 5 Sec. 6)	each				
05.06.053 Guide Posts Wood Adjust (Div. 5 Sec. 6)	each				
05.07.001 Cast in Place Concrete Reinforced (Div. 5 Sec. 7)	cubic metre				
05.07.003 Cast in Place Concrete Reinforced (Div. 5 Sec. 7)	lump sum				
05.07.005 Cast in Place Concrete Non-Reinforced (Div. 5 Sec. 7)	cubic metre				
05.07.010 Concrete Curb & Gutter Type 'A' (Div. 5 Sec. 7)	metre				
05.07.012 Concrete Curb & Gutter Type 'B' (Div. 5 Sec. 7)	metre				
05.07.014 Concrete Curb & Gutter Type 'C' (Div. 5 Sec. 7)	metre				
05.07.016 Concrete Curb Type 'D' (Div. 5 Sec. 7)	metre				
			CARRIED FORWARD $		

Note ! Column "D" to be completed in written form. Column "E" to be completed in numerical form . Column "F" to be completed in numerical form.

WHERE THERE IS A CONFLICT WRITTEN WORD WILL GOVERN

SPECIFICATION (A) DESCRIPTION MAY NOT BE IDENTICAL TO "PARAGRAPH" DESCRIPTION IN STANDARD SPECIFICATION

Specification (A)	Unit (B)	Estimated Quantity (C)	Unit Price Written Words (D)	Unit Price Figures (E)	Extension (F)
			BROUGHT FORWARD $		
05.07.018 Concrete Curb Type 'E' (Div. 5 Sec. 7)	metre				
05.07.020 Concrete Curb Type 'F' (Div. 5 Sec. 7)	metre				
05.07.025 Concrete Sidewalk (Div. 5 Sec. 7)	square metre				
05.07.027 Concrete Driveway Entrance (Div. 5 Sec. 7)	square metre				
05.07.030 Barrier Cast In Place Jersey (Div. 5 Sec. 7)	metre				
05.07.031 Concrete Bridge Traffic Railing (Div. 5 Sec. 7)	metre				
05.07.032 Concrete Bridge Deck (Div. 5 Sec. 7)	cubic metre				
05.07.034 Concrete Island Surface (Div. 5 Sec. 7)	square metre				
05.07.036 Concrete Reinforced Slope Protection (Div. 5 Sec. 7)	square metre				
05.08.001 Concrete Girders Precast/Prestressed (Div. 5 Sec. 8)	lump sum				
05.08.002 Concrete Sections Precast (Div. 5 Sec. 8)	lump sum				
			CARRIED FORWARD $		

Note ! Column "D" to be completed in written form. Column "E" to be completed in numerical form . Column "F" to be completed in numerical form.

WHERE THERE IS A CONFLICT WRITTEN WORD WILL GOVERN

SPECIFICATION (A) DESCRIPTION MAY NOT BE IDENTICAL TO "PARAGRAPH" DESCRIPTION IN STANDARD SPECIFICATION

Specification (A)	Unit (B)	Estimated Quantity (C)	Unit Price Written Words (D)	Unit Price Figures (E)	Extension (F)
			BROUGHT FORWARD $		
05.08.003 Barrier Precast Concrete Jersey (Div. 5 Sec. 8)	metre				
05.08.004 Barrier Low Profile Concrete (Div. 5 Sec. 8)	metre				
05.09.001 Waterproofing Concrete Bridge Decks (Div.5 Sec. 9)	square metre				
05.09.002 Waterproofing Rosphalt-50 (Div.5 Sec. 9)	tonne				
05.09.003 Waterproofing Rosphalt-50 install (Div.5 Sec. 9)	tonne				
05.09.004 Waterproofing Sorprema (Div.5 Sec. 9)	square metre				
05.09.005 Waterproofing Eliminator Div.5 Sec. 9)	square metre				
05.10.001 Pipe Multiplate (Div. 5 Sec. 10)	metre				
05.10.002 Pipe Multiplate (Div. 5 Sec. 10)	lump sum				
05.11.001 Metal Traffic Barriers for Structures (Div. 5 Sec. 11)	metre				
05.11.002 Metal Barriers Wall Railings (Div. 5 Sec. 11)	metre				
			CARRIED FORWARD $		

Note ! Column "D" to be completed in written form. Column "E" to be completed in numerical form . Column "F" to be completed in numerical form.

WHERE THERE IS A CONFLICT WRITTEN WORD WILL GOVERN

SPECIFICATION (A) DESCRIPTION MAY NOT BE IDENTICAL TO "PARAGRAPH" DESCRIPTION IN STANDARD SPECIFICATION

Specification (A)	Unit (B)	Estimated Quantity (C)	Unit Price Written Words (D)	Unit Price Figures (E)	Extension (F)
			BROUGHT FORWARD $		
05.11.003 Metal Steel Railings for Structures (Div. 5 Sec. 11)	metre				
05.11.004 Bridge Rail (Div. 5 Sec. 11)	metre				
05.12.002 Pipe Concrete 300mm dia. Class 65D (Div. 5 Sec.12)	metre				
05.12.003 Pipe Concrete 375mm dia. Class 65D (Div. 5 Sec.12)	metre				
05.12.004 Pipe Concrete 450mm dia. Class 65D (Div. 5 Sec. 12)	metre				
05.12.005 Pipe Concrete 600mm dia. Class 65D (Div. 5 Sec. 12)	metre				
05.12.006 Pipe Concrete 750mm dia. Class 65D (Div. 5 Sec. 12)	metre				
05.12.007 Pipe Concrete 900mm dia. Class 65D (Div. 5 Sec. 12)	metre				
05.12.010 Pipe Concrete 1050mm dia. Class 65D (Div. 5 Sec. 12)	metre				
05.12.012 Pipe Concrete 1200mm dia. Class 65D (Div. 5 Sec. 12)	metre				
			CARRIED FORWARD $		

Note ! Column "D" to be completed in written form. Column "E" to be completed in numerical form . Column "F" to be completed in numerical form.

WHERE THERE IS A CONFLICT WRITTEN WORD WILL GOVERN

SPECIFICATION (A) DESCRIPTION MAY NOT BE IDENTICAL TO "PARAGRAPH" DESCRIPTION IN STANDARD SPECIFICATION

Specification (A)	Unit (B)	Estimated Quantity (C)	Unit Price Written Words (D)	Unit Price Figures (E)	Extension (F)
			BROUGHT FORWARD $		
05.12.014 Pipe Concrete 1350mm dia. Class 65D (Div. 5 Sec. 12)	metre				
05.12.016 Pipe Concrete 1500mm dia. Class 65D (Div. 5 Sec. 12)	metre				
05.12.018 Pipe Concrete 1800mm dia. Class 65D (Div. 5 Sec. 12)	metre				
05.12.020 Pipe Concrete 2100mm dia. Class 65D (Div. 5 Sec. 12)	metre				
05.12.030 Pipe Concrete 300mm dia. Class 100D (Div. 5 Sec.12)	metre				
05.12.032 Pipe Concrete 375mm dia. Class 100D (Div. 5 Sec. 12)	metre				
05.12.034 Pipe Concrete 450mm dia. Class 100D (Div. 5 Sec. 12)	metre				
05.12.036 Pipe Concrete 600mm dia. Class 100D (Div. 5 Sec. 12)	metre				
05.12.038 Pipe Concrete 750mm dia. Class 100D (Div. 5 Sec. 12)	metre				
05.12.040 Pipe Concrete 900mm dia. Class 100D (Div. 5 Sec. 12)	metre				
			CARRIED FORWARD $		

Note ! Column "D" to be completed in written form. Column "E" to be completed in numerical form . Column "F" to be completed in numerical form.

WHERE THERE IS A CONFLICT WRITTEN WORD WILL GOVERN

SPECIFICATION (A) DESCRIPTION MAY NOT BE IDENTICAL TO "PARAGRAPH" DESCRIPTION IN STANDARD SPECIFICATION

Specification (A)	Unit (B)	Estimated Quantity (C)	Unit Price Written Words (D)	Unit Price Figures (E)	Extension (F)
			BROUGHT FORWARD $		
05.12.042 Pipe Concrete 1050mm dia. Class 100D (Div. 5 Sec. 12)	metre				
05.12.044 Pipe Concrete 1200mm dia. Class 100D (Div. 5 Sec. 12)	metre				
05.12.046 Pipe Concrete 1500mm dia. Class 100D (Div. 5 Sec. 12)	metre				
05.12.048 Pipe Concrete 1800mm dia. Class 100D (Div. 5 Sec. 12)	metre				
05.12.050 Pipe Concrete 2100mm dia. Class 100D (Div. 5 Sec. 12)	metre				
05.12.060 Pipe Concrete 300mm dia. Class 140D (Div. 5 Sec.12)	metre				
05.12.061 Pipe Concrete 375mm dia. Class 140D (Div. 5 Sec. 12)	metre				
05.12.062 Pipe Concrete 450mm dia. Class 140D (Div. 5 Sec. 12)	metre				
05.12.063 Pipe Concrete 600mm dia. Class 140D (Div. 5 Sec. 12)	metre				
05.12.064 Pipe Concrete 750mm dia. Class 140D (Div. 5 Sec. 12)	metre				
			CARRIED FORWARD $		

Note ! Column "D" to be completed in written form. Column "E" to be completed in numerical form . Column "F" to be completed in numerical form.

WHERE THERE IS A CONFLICT WRITTEN WORD WILL GOVERN

SPECIFICATION (A) DESCRIPTION MAY NOT BE IDENTICAL TO "PARAGRAPH" DESCRIPTION IN STANDARD SPECIFICATION

Specification (A)	Unit (B)	Estimated Quantity (C)	Unit Price Written Words (D)	Unit Price Figures (E)	Extension (F)
			BROUGHT FORWARD $		
05.12.065 Pipe Concrete 900mm dia. Class 140D (Div. 5 Sec. 12)	metre				
05.12.066 Pipe Concrete 1200mm dia. Class 140D (Div. 5 Sec. 12)	metre				
05.12.067 Pipe Concrete 1500mm dia. Class 140D (Div. 5 Sec. 12)	metre				
05.12.068 Pipe Concrete 1800mm dia. Class 140D (Div. 5 Sec. 12)	metre				
05.12.069 Pipe Concrete 2100mm dia. Class 140D (Div. 5 Sec. 12)	metre				
05.12.080 Pipe Concrete 1200mm dia. With Fish Baffles (Div. 5 Sec. 12)	metre				
05.12.082 Pipe Concrete 1500mm dia. With Fish Baffles (Div. 5 Sec. 12)	metre				
05.12.084 Pipe Concrete 1800mm dia. With Fish Baffles (Div. 5 Sec. 12)	metre				
05.12.087 Pipe Concrete 2400mm dia. With Fish Baffles (Div. 5 Sec. 12)	metre				
05.12.089 Pipe Precast Concrete Tee 90deg 600mm (Div. 5 Sec. 12)	each				
			CARRIED FORWARD $		

Note ! Column "D" to be completed in written form. Column "E" to be completed in numerical form . Column "F" to be completed in numerical form.

WHERE THERE IS A CONFLICT WRITTEN WORD WILL GOVERN

SPECIFICATION (A) DESCRIPTION MAY NOT BE IDENTICAL TO "PARAGRAPH" DESCRIPTION IN STANDARD SPECIFICATION

Specification (A)	Unit (B)	Estimated Quantity (C)	Unit Price Written Words (D)	Unit Price Figures (E)	Extension (F)
			BROUGHT FORWARD $		
05.12.101 Pipe Driveway 300mm dia. (Div. 5 Sec.12)	metre				
05.12.102 Pipe Driveway 400mm dia. (Div. 5 Sec. 12)	metre				
05.12.103 Pipe Driveway 500mm dia. Div. 5 Sec. 12)	metre				
05.12.104 Pipe Driveway 600mm dia. (Div. 5 Sec. 12)	metre				
05.12.105 Pipe Driveway 700mm dia. (Div. 5 Sec. 12)	metre				
05.12.112 Pipe Steel 200 mm (Div. 5 Sec 12)	metre				
05.12.113 Pipe Steel 300 mm (Div. 5 Sec 12)	metre				
05.12.114 Pipe Steel 400mm dia. (Div. 5 Sec. 12)	metre				
05.12.115 Pipe Steel 500mm dia. (Div. 5 Sec. 12)	metre				
05.12.116 Pipe Steel 600mm dia. (Div. 5 Sec. 12)	metre				
			CARRIED FORWARD $		

Note ! Column "D" to be completed in written form. Column "E" to be completed in numerical form . Column "F" to be completed in numerical form.

WHERE THERE IS A CONFLICT WRITTEN WORD WILL GOVERN

SPECIFICATION (A) DESCRIPTION MAY NOT BE IDENTICAL TO "PARAGRAPH" DESCRIPTION IN STANDARD SPECIFICATION

Specification (A)	Unit (B)	Estimated Quantity (C)	Unit Price Written Words (D)	Unit Price Figures (E)	Extension (F)
BROUGHT FORWARD $					
05.12.117 Pipe Steel 700mm dia. (Div. 5 Sec. 12)	metre				
05.12.118 Pipe Steel 800mm dia. (Div. 5 Sec. 12)	metre				
05.12.119 Pipe Steel 900mm dia. (Div. 5 Sec. 12)	metre				
05.12.122 Pipe Steel 1000mm dia. (Div. 5 Sec. 12)	metre				
05.12.124 Pipe Steel 1200mm dia. (Div. 5 Sec. 12)	metre				
05.12.126 Pipe Steel 1500mm dia. (Div. 5 Sec. 12)	metre				
05.12.128 Pipe Steel 1800mm dia. (Div. 5 Sec. 12)	metre				
05.12.150 Pipe Aluminum Alloy 400mm dia. (Div. 5 Sec. 12)	metre				
05.12.151 Pipe Aluminum Alloy 500mm dia. (Div. 5 Sec. 12)	metre				
05.12.152 Pipe Aluminum Alloy 600mm dia. (Div. 5 Sec. 12)	metre				
CARRIED FORWARD $					

Note ! Column "D" to be completed in written form. Column "E" to be completed in numerical form . Column "F" to be completed in numerical form.

WHERE THERE IS A CONFLICT WRITTEN WORD WILL GOVERN

SPECIFICATION (A) DESCRIPTION MAY NOT BE IDENTICAL TO "PARAGRAPH" DESCRIPTION IN STANDARD SPECIFICATION

Specification (A)	Unit (B)	Estimated Quantity (C)	Unit Price Written Words (D)	Unit Price Figures (E)	Extension (F)
			BROUGHT FORWARD $		
05.12.154 Pipe Aluminum Alloy 800mm dia. (Div. 5 Sec. 12)	metre				
05.12.158 Pipe Aluminum Alloy 1200mm dia. (Div. 5 Sec. 12)	metre				
05.12.170 Pipe PVC 100mm dia. (Div. 5 Sec. 12)	metre				
05.12.171 Pipe PVC 150mm dia. (Div. 5 Sec. 12)	metre				
05.12.172 Pipe PVC 200mm dia. DR18 (Div. 5 Sec. 12)	metre				
05.12.173 Pipe PVC 300mm dia. DR18 (Div. 5 Sec. 12)	metre				
05.12.174 Pipe PVC 200mm dia. DR35 (Div. 5 Sec. 12)	metre				
05.12.175 Pipe PVC 300mm dia. DR35 (Div. 5 Sec. 12)	metre				
05.12.176 Pipe PVC 250mm dia. DR35 (Div. 5 Sec. 12)	metre				
05.12.17 Pipe PVC 450mm dia. DR18 (Div. 5 Sec. 12)	metre				
05.12.180 Pipe Perforated PVC 100mm dia. (Div. 5 Sec. 12)	metre				
			CARRIED FORWARD $		

Note ! Column "D" to be completed in written form. Column "E" to be completed in numerical form . Column "F" to be completed in numerical form.

WHERE THERE IS A CONFLICT WRITTEN WORD WILL GOVERN

SPECIFICATION (A) DESCRIPTION MAY NOT BE IDENTICAL TO "PARAGRAPH" DESCRIPTION IN STANDARD SPECIFICATION

Specification (A)	Unit (B)	Estimated Quantity (C)	Unit Price Written Words (D)	Unit Price Figures (E)	Extension (F)
			BROUGHT FORWARD $		
05.12.182 Pipe Perforated PVC 250mm dia. (Div. 5 Sec. 12)	metre				
05.12.184 Pipe Polyethylene 375mm dia. (Div. 5 Sec. 12)	metre				
05.12.185 Pipe Polyethylene 450mm dia. (Div. 5 Sec. 12)	metre				
05.12.186 Pipe Polyethylene 525mm dia. (Div. 5 Sec. 12)	metre				
05.12.187 Pipe Polyethylene 600mm dia. (Div. 5 Sec. 12)	metre				
05.12.192 Pipe Liner (Div. 5 Sec. 12)	metre				
05.12.193 Pipe Flat Bottom Cattle Pass (Div. 5 Sec. 12)	metre				
05.12.194 Pipe Cattle Pass Repair (Div. 5 Sec. 12)	lump sum				
05.12.197 Clean Gutter (Div. 5 Sec. 12)	lump sum				
05.12.198 Clean Culvert (Div. 5 Sec. 12)	each				
05.12.199 Repair Culvert (Div. 5 Sec. 12)	each				
			CARRIED FORWARD $		

Note ! Column "D" to be completed in written form. Column "E" to be completed in numerical form . Column "F" to be completed in numerical form.

WHERE THERE IS A CONFLICT WRITTEN WORD WILL GOVERN

SPECIFICATION (A) DESCRIPTION MAY NOT BE IDENTICAL TO "PARAGRAPH" DESCRIPTION IN STANDARD SPECIFICATION

Specification (A)	Unit (B)	Estimated Quantity (C)	Unit Price Written Words (D)	Unit Price Figures (E)	Extension (F)
			BROUGHT FORWARD $		
05.12.302 Catch Basin Precast 750mm dia. (Div. 5 Sec. 12)	each				
05.12.304 Catch Basin Precast 900mm dia. (Div. 5 Sec. 12)	each				
05.12.306 Catch Basin Precast 1050mm dia. (Div. 5 Sec. 12)	each				
05.12.308 Catch Basin Precast 1200mm dia. (Div. 5 Sec. 12)	each				
05.12.310 Catch Basin Precast 1500mm dia. (Div. 5 Sec. 12)	each				
05.12.312 Catch Basin Precast 1800mm dia. (Div. 5 Sec. 12)	each				
05.12.315 Catch Basin Precast 2100mm dia. (Div. 5 Sec. 12)	each				
05.12.317 Catch Basin Precast 2400mm dia. (Div. 5 Sec. 12)	each				
05.12.320 Catch Basin Precast T-Base 1200mm dia. (Div. 5 Sec. 12)	each				
05.12.323 Catch Basin Precast Class 65D 750mm dia. (Div. 5 Sec. 12)	each				
05.12.324 Catch Basin Square 4500mm dia. (Div. 5 Sec. 12)	each				
			CARRIED FORWARD $		

Note ! Column "D" to be completed in written form. Column "E" to be completed in numerical form . Column "F" to be completed in numerical form.

WHERE THERE IS A CONFLICT WRITTEN WORD WILL GOVERN

SPECIFICATION (A) DESCRIPTION MAY NOT BE IDENTICAL TO "PARAGRAPH" DESCRIPTION IN STANDARD SPECIFICATION

Specification (A)	Unit (B)	Estimated Quantity (C)	Unit Price Written Words (D)	Unit Price Figures (E)	Extension (F)
			BROUGHT FORWARD $		
05.12.325 Catch Basin Square 600mm dia. (Div. 5 Sec. 12)	each				
05.12.330 Catch Basin / Manhole Remove (Div. 5 Sec. 12)	each				
05.12.332 Catch Basin / Manhole Adjust/Repair (Div. 5 Sec. 12)	each				
05.12.333 Catch Basin Frame & Grate (Div. 5 Sec. 12)	each				
05.12.334 Catch Basin / Manhole Relocate (Div. 5 Sec. 12))	each				
05.12.336 Catch Basin / Manhole Clean Exist (Div. 5 Sec. 12)	each				
05.12.338 Catch Basin Precast 3m X 3m (Div. 5 Sec. 12)	each				
05.12.350 Manhole Precast 1520mm (Div. 5 Sec.12)	each				
05.12.351 Manhole Precast 1050mm (Div. 5 Sec.12)	each				
05.12.360 Water Valve Adjust/Repair (Div. 5 Sec.12)	each				
05.12.362 Waterline Relcoate (Div. 5 Sec.12)	each				
			CARRIED FORWARD $		

Note ! Column "D" to be completed in written form. Column "E" to be completed in numerical form . Column "F" to be completed in numerical form.

WHERE THERE IS A CONFLICT WRITTEN WORD WILL GOVERN

SPECIFICATION (A) DESCRIPTION MAY NOT BE IDENTICAL TO "PARAGRAPH" DESCRIPTION IN STANDARD SPECIFICATION

Specification (A)	Unit (B)	Estimated Quantity (C)	Unit Price Written Words (D)	Unit Price Figures (E)	Extension (F)
			BROUGHT FORWARD $		
05.12.364 Water Service Re-connect (Div. 5 Sec.12)	each				
05.12.366 Fire Hydrant Adjust and/or Relocate (Div. 5 Sec.12)	each				
05.12.367 Fire Hydrant (Div. 5 Sec.12)	each				
05.12.370 Concrete Connection Cast in Place (Div. 5 Sec.12)	each				
05.12.380 Culvert Precast Box (Div. 5 Sec.12)	metre				
05.12.382 Culvert Precast Box With Fish Baffles (Div. 5 Sec.12)	metre				
05.12.383 Culvert-Fish Baffles (Div. 5 Sec.12)	each				
05.12.384 Culvert Precast Box 3.6m x 1.8m (Div. 5 Sec.12)	metre				
05.12.386 Culvert Precast Box 1.2m x 1.8m (Div. 5 Sec.12)	metre				
05.12.390 Culvert Cast in Place(Div. 5 Sec.12)	metre				
05.12.391 Culvert Cast in Place Extension (Div. 5 Sec.12)	each				
			CARRIED FORWARD $		

Note ! Column "D" to be completed in written form. Column "E" to be completed in numerical form . Column "F" to be completed in numerical form.

WHERE THERE IS A CONFLICT WRITTEN WORD WILL GOVERN

SPECIFICATION (A) DESCRIPTION MAY NOT BE IDENTICAL TO "PARAGRAPH" DESCRIPTION IN STANDARD SPECIFICATION

Specification (A)	Unit (B)	Estimated Quantity (C)	Unit Price Written Words (D)	Unit Price Figures (E)	Extension (F)
			BROUGHT FORWARD $		
05.12.392 Culvert Precast, Concrete Box (Div. 5 Sec.12)	metre				
05.12.394 Culvert Precast, Concrete Box (Div. 5 Sec.12)	lump sum				
05.12.396 Culvert CIP Open Grated, Concrete (Div. 5 Sec.12)	metre				
05.12.398 Transition Box Cast in Place (Div. 5 Sec.12)	each				
05.12.399 Culvert Concrete Inlet Cutoff Wall (Div. 5 Sec.12)	lump sum				
05.12.402 Break Into Existing Services (Div. 5 Sec.12)	each				
05.12.405 Sanitary Lateral Adjust (Div. 5 Sec.12)	each				
05.12.406 Utility - Remove and Replace (Div. 5 Sec.12)	lump sum				
05.13.001 Asphalt Concrete Removal Bridge Deck (Div. 5 Sec. 13)	square metre				
05.13.002 Asphalt Concrete Removal Bridge Deck (Div. 5 Sec. 13)	lump sum				
05.13.003 Bridge Deck Repair (Div. 5 Sec. 13)	square metre				
			CARRIED FORWARD $		

Note ! Column "D" to be completed in written form. Column "E" to be completed in numerical form . Column "F" to be completed in numerical form.

WHERE THERE IS A CONFLICT WRITTEN WORD WILL GOVERN

SPECIFICATION (A) DESCRIPTION MAY NOT BE IDENTICAL TO "PARAGRAPH" DESCRIPTION IN STANDARD SPECIFICATION

Specification (A)	Unit (B)	Estimated Quantity (C)	Unit Price Written Words (D)	Unit Price Figures (E)	Extension (F)
			BROUGHT FORWARD $		
05.13.004 Bridge Soffit Repair (Div. 5 Sec. 13)	square metre				
05.13.005 Through Deck Repair (Div. 5 Sec. 13)	square metre				
05.13.006 End Post/Intermediate Post (Div. 5 Sec. 13)	each				
05.13.010 Sub Structure Repair (Div. 5 Sec. 13)	square metre				
05.13.012 Bridge Curb Remove & Replace (Div. 5 Sec. 13)	metre				
05.13.015 Bridge Concrete Girder Repair (Div. 5 Sec. 13)	metre				
05.13.020 Bridge Deck Repair & Overlay (Div. 5 Sec. 13)	lump sum				
05.13.021 Concrete Slab Removal (Div. 5 Sec. 13)	square metre				
05.13.030 Headwall Repair (Div. 5 Sec. 13)	each				
05.13.032 Wing Wall Repair (Div. 5 Sec. 13)	each				
05.13.033 Bridge Rehab Epoxy Injection (Div. 5 Sec. 13)	metre				
			CARRIED FORWARD $		

Note ! Column "D" to be completed in written form. Column "E" to be completed in numerical form . Column "F" to be completed in numerical form.

WHERE THERE IS A CONFLICT WRITTEN WORD WILL GOVERN

SPECIFICATION (A) DESCRIPTION MAY NOT BE IDENTICAL TO "PARAGRAPH" DESCRIPTION IN STANDARD SPECIFICATION

Specification (A)	Unit (B)	Estimated Quantity (C)	Unit Price Written Words (D)	Unit Price Figures (E)	Extension (F)
			BROUGHT FORWARD $		
05.13.034 Concrete Repair Type 1 (Div. 5 Sec. 13)	square metre				
05.13.035 Concrete Repair Type 2 (Div. 5 Sec. 13)	square metre				
05.13.036 Concrete Repair Vertical (Div. 5 Sec. 13)	square metre				
05.13.037 Concrete Repair Horizontal (Div. 5 Sec. 13)	square metre				
0.5.14.001 Mechanically Stabilized Earth Structure (Div. 5 Sec. 14)	lump sum				
0.5.14.002 Mechanically Stabilized Earth Structure (Div. 5 Sec. 14)	square metre				
05.15.001 Asphaltic Plug Joints (Div.5 Sec.15)	each				
05.15.002 Asphaltic Plug Joints (Div.5 Sec.15)	metre				
05.15.003 Asphaltic Plug Joint Repair (Div.5 Sec.15)	metre				
05.15.004 Asphaltic Plug Joint Replacement (Div.5 Sec.15)	each				
05.16.001 Shotcrete - Wet and Dry Process (Div.5 Sec.16)	square metre				
			CARRIED FORWARD $		

Note ! Column "D" to be completed in written form. Column "E" to be completed in numerical form . Column "F" to be completed in numerical form.

WHERE THERE IS A CONFLICT WRITTEN WORD WILL GOVERN

SPECIFICATION (A) DESCRIPTION MAY NOT BE IDENTICAL TO "PARAGRAPH" DESCRIPTION IN STANDARD SPECIFICATION

Specification (A)	Unit (B)	Estimated Quantity (C)	Unit Price Written Words (D)	Unit Price Figures (E)	Extension (F)
			BROUGHT FORWARD $		
05.16.002 Shotcrete - Wet and Dry Process (Div.5 Sec.16)	lump sum				
05.16.003 Shotcrete Repair (Div.5 Sec.16)	square metre				
05.16.003 Shotcrete Repair (Div.5 Sec.16)	lump sum				
05.17.001 Coatings for Steel Structures (Div.5 Sec.17)	lump sum				
05.18.001 Cast In Place High Performance Concrete (Div. 5 Sec. 18)	cubic metre				
05.19.001 Bridge Bearings Elastomeric (Div.5 Sec.19)	each				
05.19.002 Bridge Bearings (Div.5 Sec.19)	each				
05.19.003 Bridge Bearings - Steel Lacminated (Div.5 Sec.19)	each				
05.19.004 Bridge Bearings - Neoprene (Div.5 Sec.19)	each				
05.19.005 Bridge Bearings Clean/Adjust (Div.5 Sec.19)	each				
06.03.001 Chain Link Fence (Div. 6 Sec. 3)	metre				
			CARRIED FORWARD $		

Note ! Column "D" to be completed in written form. Column "E" to be completed in numerical form . Column "F" to be completed in numerical form.

WHERE THERE IS A CONFLICT WRITTEN WORD WILL GOVERN

SPECIFICATION (A) DESCRIPTION MAY NOT BE IDENTICAL TO "PARAGRAPH" DESCRIPTION IN STANDARD SPECIFICATION

Specification (A)	Unit (B)	Estimated Quantity (C)	Unit Price Written Words (D)	Unit Price Figures (E)	Extension (F)
			BROUGHT FORWARD $		
06.03.002 Chain Link Fence Gate (Div. 6 Sec. 3)	each				
06.03.003 Chain Link Fence Remove (Div. 6 Sec. 3)	metre				
06.03.004 Chain Link Fence Remove / Replace (Div. 6 Sec. 3)	metre				
06.04.002 ROW Wire Fence Type “A” (Div.6 Sec. 4)	metre				
06.04.004 ROW Wire Fence Type “B” (Div.6 Sec.4)	metre				
06.04.006 ROW Fence Steel Gate (Div.6 Sec.4)	metre				
06.04.008 ROW Fence Remove / Replace (Div.6 Sec.4)	metre				
06.05.002 Removal of Sidewalks (Div. 6 Sec. 5)	square metre				
06.05.003 Removal of Curb (Div. 6 Sec. 5)	metre				
06.05.004 Removal of Driveway Surface (Div. 6 Sec. 5)	square metre				
06.05.005 Removal of Curb & Gutter (Div. 6 Sec. 5)	metre				
			CARRIED FORWARD $		

Note ! Column "D" to be completed in written form. Column "E" to be completed in numerical form . Column "F" to be completed in numerical form.

WHERE THERE IS A CONFLICT WRITTEN WORD WILL GOVERN

SPECIFICATION (A) DESCRIPTION MAY NOT BE IDENTICAL TO "PARAGRAPH" DESCRIPTION IN STANDARD SPECIFICATION

Specification (A)	Unit (B)	Estimated Quantity (C)	Unit Price Written Words (D)	Unit Price Figures (E)	Extension (F)
			BROUGHT FORWARD $		
06.05.006 Removal of Gutter (Div. 6 Sec. 5)	metre				
06.05.007 Remove & Replace Concrete Curb (Div. 6 Sec. 5)	metre				
06.05.008 Remove Concrete Island (Div. 6 Sec. 5)	square metre				
06.05.009 Remove Concrete Median (Div. 6 Sec. 5)	square metre				
06.05.010 Remove Cast in Place Jersey Barrier (Div. 6 Sec. 5)	metre				
06.05.011 Remove Retaining Wall (Div. 6 Sec. 5)	metre				
06.05.012 Remove Retaining Wall (Div. 6 Sec. 5)	lump sum				
06.06.001 Traffic Line Painting (Div. 6 Sec. 6)	linear kilometre				
06.08.001 Calcium Chloride Flake (Div. 6 Sec. 8)	kilogram				
06.09.001 Sodium Chloride (Div. 6 Sec. 9)	tonne				
06.09.002 Sodium Chloride Baddeck-Pugwash (Div. 6 Sec. 9)	tonne				
			CARRIED FORWARD $		

Note ! Column "D" to be completed in written form. Column "E" to be completed in numerical form . Column "F" to be completed in numerical form.

WHERE THERE IS A CONFLICT WRITTEN WORD WILL GOVERN

SPECIFICATION (A) DESCRIPTION MAY NOT BE IDENTICAL TO "PARAGRAPH" DESCRIPTION IN STANDARD SPECIFICATION

Specification (A)	Unit (B)	Estimated Quantity (C)	Unit Price Written Words (D)	Unit Price Figures (E)	Extension (F)
			BROUGHT FORWARD $		
06.09.003 Sodium Chloride Baddeck-Mulgrave (Div. 6 Sec. 9)	tonne				
06.09.004 Sodium Chloride Boularderie - Mulgrave (Div. 6 Sec. 9)	tonne				
06.10.001 Winter Sand (Div. 6 Sec. 10)	tonne				
06.10.002 Winter Sand (Div. 6 Sec. 10)	cubic metre				
06.11.001 Magnesium Chloride Pumped (Div 6 Sec 11)	kilo litre				
06.11.002 Magnesium Chloride Applied (Div 6 Sec 11)	kilo litre				
07.01.001 Sediment Barriers Straw (Div. 7 Sec. 1)	metre				
07.01.002 Sediment Barriers Silt Fence (Div. 7 Sec. 1)	metre				
07.01.003 Sediment Barriers Berm (Div. 7 Sec. 1)	metre				
07.01.004 Sediment Barriers Sand Bag (Div. 7 Sec. 1)	metre				
07.01.005 Sediment Barriers Straw Hay Bales (Div. 7 Sec. 1)	each				
			CARRIED FORWARD $		

Note ! Column "D" to be completed in written form. Column "E" to be completed in numerical form . Column "F" to be completed in numerical form.

WHERE THERE IS A CONFLICT WRITTEN WORD WILL GOVERN

SPECIFICATION (A) DESCRIPTION MAY NOT BE IDENTICAL TO "PARAGRAPH" DESCRIPTION IN STANDARD SPECIFICATION

Specification (A)	Unit (B)	Estimated Quantity (C)	Unit Price Written Words (D)	Unit Price Figures (E)	Extension (F)
			BROUGHT FORWARD $		
07.01.006 Sediment Barriers Remove (Div. 7 Sec. 1)	metre				
07.01.007 Sediment Barriers Paige Wire (Div. 7 Sec. 1)	metre				
07.01.008 Sediment Barriers Wire Backed (Div. 7 Sec. 1)	metre				
07.02.001 Flow Checks Straw Bale (Div. 7 Sec. 2)	metre				
07.02.002 Flow Checks Sand Bag (Div. 7 Sec. 2)	metre				
07.02.003 Flow Checks Rock (Div. 7 Sec. 2)	metre				
07.02.004 Flow Checks Rock Remove (Div. 7 Sec. 2)	each				
07.02.005 Flow Check Rock (Div. 7 Sec. 2)	each				
07.03.001 Pond Settlement Dewater & Backfill (Div. 7 Sec. 3)	each				
07.05.001 Hydroseeding (Div. 7 Sec. 5)	square metre				
07.05.002 Hydroseeding Special (Div. 7 Sec. 5)	square metre				
			CARRIED FORWARD $		

Note ! Column "D" to be completed in written form. Column "E" to be completed in numerical form . Column "F" to be completed in numerical form.

WHERE THERE IS A CONFLICT WRITTEN WORD WILL GOVERN

SPECIFICATION (A) DESCRIPTION MAY NOT BE IDENTICAL TO "PARAGRAPH" DESCRIPTION IN STANDARD SPECIFICATION

Specification (A)	Unit (B)	Estimated Quantity (C)	Unit Price Written Words (D)	Unit Price Figures (E)	Extension (F)
			BROUGHT FORWARD $		
07.06.001 Dry Mulching (Div. 7 Sec. 6)	square metre				
07.07.001 Erosion Control Blanket Jute (Div. 7 Sec. 7)	square metre				
07.07.002 Erosion Control Blanket Excelsor (Div. 7 Sec. 7)	square metre				
07.07.003 Erosion Control Blanket Straw (Div. 7 Sec. 7)	square metre				
07.07.004 Erosion Control Blanket Wood Fiber (Div. 7 Sec. 7)	square metre				
07.07.005 Erosion Control Blanket Synthetic (Div. 7 Sec. 7)	square metre				
07.08.001 Top Soil (Div. 7 Sec. 8)	square metre				
07.09.001 Water Control for Bridge Foundations (Div. 7 Sec. 9)	lump sum				
07.10.001 Turbidity Curtain (Div. 7 Sec. 10)	metre				
07.10.002 Turbidity Curtain Install (Div. 7 Sec. 10)	metre				
07.10.003 Turbidity Curtain Install (Div. 7 Sec. 10)	lump sum				
			CARRIED FORWARD $		

Note ! Column "D" to be completed in written form. Column "E" to be completed in numerical form . Column "F" to be completed in numerical form.

WHERE THERE IS A CONFLICT WRITTEN WORD WILL GOVERN

SPECIFICATION (A) DESCRIPTION MAY NOT BE IDENTICAL TO "PARAGRAPH" DESCRIPTION IN STANDARD SPECIFICATION

Specification (A)	Unit (B)	Estimated Quantity (C)	Unit Price Written Words (D)	Unit Price Figures (E)	Extension (F)
			BROUGHT FORWARD $		
07.10.004 Turbidity Curtain Remove (Div. 7 Sec. 10)	lump sum				
07.11.001 Water Control Culvert Installations (Div. 7 Sec. 11)	lump sum				
07.12.001 Dewatering with Filter Bags (Div. 7 Sec. 12)	lump sum				
07.13.001 Sodding (Div. 7 Sec. 13)	square metre				
07.14.001 Lime (Div.7 Sec.14)	tonne				
			CARRIED FORWARD $		

Note ! Column "D" to be completed in written form. Column "E" to be completed in numerical form . Column "F" to be completed in numerical form.

WHERE THERE IS A CONFLICT WRITTEN WORD WILL GOVERN

SPECIFICATION (A) DESCRIPTION MAY NOT BE IDENTICAL TO "PARAGRAPH" DESCRIPTION IN STANDARD SPECIFICATION

6Nova Scotia
Department of
Transportation
and Infrastructure Renewal

ACKNOWLEDGEMENT OF TENDER CONTENT FORM

List of Definition of Terms, Department of Transportation and Infrastructure Renewal Standard Specification dated February 1, 1997 (including latest revisions) and the attached Tenders and Special Provisions, referred to in Paragraph 11 of Agreement

dated .....

BETWEEN

.....
CONTRACTOR

and her Majesty the Queen, in the Right of Her Province of Nova Scotia as represented in this behalf by the Honourable Minister of Transportation and Infrastructure Renewal .

DESIGNATION	NAME	DATE
Division 1. Section 1	Definition of Terms	February 2014
Division 1. Section 2	Instructions to Bidders - Paper Bidding	February 2014
Division 1. Section 2E	Instruction to Bidders - Electronic Bidding	February 2014
Division 1. Section 3	Agreement	February 2014
Division 1. Section 4	General Provisions	February 2014
Division 1. Section 5	Environmental Protection	February 2014
Division 2. Section 1	Clearing	February 2014
Division 2. Section 2	Grubbing	February 1, 2000
Division 2. Section 3	Roadway and Drainage Excavation	February 1, 2011
Division 2. Section 4	Disposal of Surplus Material	March 1, 1998
Division 2. Section 5	Borrow	February 1, 2000
Division 2. Section 6	Subgrade	March 1, 1998
Division 2. Section 7	Shoulders	February 1, 2008
Division 2. Section 8	Compaction	February 1, 2002
Division 2. Section 9	Water for Compaction & Dust Control	February 1, 1999
Division 2. Section 10	Rough Grading	February 1, 1999
Division 2. Section 11	Fine Grading	February 1, 1999
Division 2. Section 12	Foundation Excavation	February 2014
Division 2. Section 13	Foundation Excavation for Bridges	March 1, 1998
Division 3. Section 1	Gravel Borrow	February 1, 1997
Division 3. Section 2	Gravel Type 1, 1S, 2 & M	February 1, 2008
Division 3. Section 3	Air Cooled Blast Furnace Slag	February 1, 2005
Division 3. Section 4	Clear Stone	March 1, 1998

DESIGNATION	NAME	DATE
Division 3. Section 5	Compaction of Gravels	February 1, 1997
Division 3. Section 6	Loose Laid Rip-Rap	February 1, 2008
Division 3. Section 7	Hand Laid Rip-Rap	February 1, 2009
Division 3. Section 8	Armour Rock	February 1, 2008
Division 3. Section 9	Rock Fill	February 1, 2007
Division 3. Section 10	Fill Against Structure	February 2014
Division 3. Section 11	Unshrinkable Backfill	February 1, 1997
Division 3 Section 12	Gravel Type 1,1S, 2 & M (EPS)	February 1, 2008
Division 4. Section 1	Emulsified Asphalt	February 1, 2003
Division 4. Section 2	Performance Graded Asphalt Binder (PGAB)	February 1, 2003
Division 4. Section 3	Asphalt Concrete Curbs & Gutters	February 1, 2002
Division 4. Section 4	Asphalt Concrete Hot Mix-Hot Placed	February 2014
Division 4. Section 5	Liquid Asphalt Primer	February 1, 2007
Division 4. Section 6	Removal of Asphalt Concrete	February 1, 2011
Division 4. Section 7	Asphalt Concrete Patching	February 2014
Division 4. Section 8	Asphalt Concrete Paving of Bridge Decks	February 2014
Division 4. Section 9	Graded Aggregate Seal (Two Courses)	Deleted 2002
Division 4. Section 10	Graded Aggregate Seal (One Course)	Deleted 2002
Division 4. Section 11	Crack Filling and Crack Sealing - (EPWS)	February 1, 2008
Division 4. Section 12	Seal Coat - (EPWS)	February 2014
Division 4. Section 13	Reclaimed Asphalt Concrete	February 1, 1997
Division 4. Section 14	Sand Seal Surface Treatment	February 1, 1997
Division 4. Section 15	Cold Mix for Winter Patching	February 1, 2000
Division 4. Section 16	Micro-surfacing - (EPWS)	February 1, 2008
Division 4. Section 17	Concrete Pavement	February 1, 1997
Division 4. Section 18	Roller Compacted Concrete	March 1, 1998
Division 4. Section 19	Asphalt Concrete End Product Specification (EPS)	February 2014
Division 5. Section 1	Piles	February 2014
Division 5. Section 2	Timber Structures	February 1, 2008
Division 5. Section 3	Structural Steel	February 1, 2008
Division 5. Section 4	Miscellaneous Metal	February 1, 1997
Division 5. Section 5	Reinforcing Steel	February 1, 2011
Division 5. Section 6	Steel Guard Rail Systems and Wooden Guide Posts	February 2014
Division 5. Section 7	Cast In Place Concrete	February 2014
Division 5. Section 8	Precast Portland Cement Concrete, Reinforced and Prestressed	February 1, 2008
Division 5. Section 9	Waterproofing Concrete Bridge Decks	February 2014
Division 5. Section 10	Corrugated Structural Plate Pipe Structures	February 2014
Division 5. Section 11	Metal Traffic Barriers and Metal Railings for Structures	February 1, 2011
Division 5. Section 12	Underground Drainage Systems	February 2014
Division 5. Section 13	Concrete Restoration - Bridge Structures	February 2014
Division 5. Section 14	Inextensible Mechanical Stabilized Earth (MSE) Structures	February 1, 2011
Division 5. Section 15	Asphaltic Plug Joints	February 1, 2010
Division 5. Section 16	Shotcrete - Wet and Dry Process	February 1, 2009
Division 5. Section 17	Coatings for Steel Structures	February 1, 2005
Division 5. Section 18	Cast in Place - High Performance Concrete (HPC)	February 1, 2011
Division 5. Section 19	Elastomeric Bearings	February 1, 2011

DESIGNATION	NAME	DATE
Division 6. Section 1	Traffic Control Persons	Deleted 2008
Division 6. Section 2	Flashing Light Units	Deleted 2008
Division 6. Section 3	Chain Link Fence	February 1, 1997
Division 6. Section 4	Right-Of-Way-Fence	February 1, 1997
Division 6. Section 5	Removal of Existing Sidewalks, Driveways and Curbs	February 1, 1997
Division 6. Section 6	Supply and Application of Non-Coning Traffic Paint	February 1, 2009
Division 6. Section 7	Calcium Chloride Water Solution	February 1, 1997
Division 6. Section 8	Calcium Chloride	February 1, 1997
Division 6. Section 9	Sodium Chloride	February 1, 1997
Division 6. Section 10	Winter Sand	February 1, 2009
Division 6. Section 11	Magnesium Chloride	February 1, 2002
Division 6. Section 12	Geotextile	February 1, 2011
Division 6. Section 13	Mobilization	February 1, 2010
Division 7. Section 1	Sediment Barriers	February 2014
Division 7. Section 2	Flow Checks	February 1, 2009
Division 7. Section 3	Settlement Ponds	February 1, 2004
Division 7. Section 4	Maintenance and Sediment Control	February 1, 1997
Division 7. Section 5	Hydroseeding	February 1, 2004
Division 7. Section 6	Dry Mulching	February 1, 2004
Division 7. Section 7	Erosion Control Blankets	February 1, 2011
Division 7. Section 8	Topsoil	February 1, 2011
Division 7. Section 9	Water Control for Bridge Foundations	February 1, 1997
Division 7. Section 10	Turbidity Curtain	February 1, 2011
Division 7. Section 11	Water Control at Culvert Extensions or Installations	February 1, 1997
Division 7. Section 12	Dewatering With Filter Bags	February 1, 1997
Division 7. Section 13	Sodding	February 1, 1997
Division 7. Section 14	Lime	February 1, 2004

The undersigned bidder hereby declares that the Special Provisions and the Province of Nova Scotia Department of Transportation and Infrastructure Renewal Standard Specification dated February 1, 1997 (including latest revisions) and the contract documents for this contract have been carefully read and understood. It is mutually agreed that submission of a bid shall be considered prima facie evidence that the bidder has made such examination and is satisfied as to the conditions of the Standard Specification, Special Provisions and Contract.

IN WITNESS WHEREOF the Parties hereto have herewith caused These Presents to be signed and sealed on the day and year first above written.

SIGNED, SEALED AND DELIVERED
by the Contractor

_____ in the Presence of _____

CONTRACTOR WITNESS

Nova Scotia
Department of
Transportation
and Infrastructure Renewal

RELEASE OF SECURITY DEPOSIT FORM
AFFIDAVIT OF PAYMENT

I, _____ of _____ , in
(Contractor) (Location)

the Province of _____, make oath and say as follows:

1. That I am the _____ of _____ , the
(Office Held) (Company Name)
contractor in Project Number 20.. - XXX between the Department of Transportation and Infrastructure Renewal for the Province of Nova Scotia and _____.
(Company Name)
2. That all subcontractors and suppliers who have done work for and supplied materials for Project Number 20.. -XXX have completed their work and supplied all materials they have agreed to supply.
3. That all subcontractors and suppliers for Project Number 20.. -XXX have submitted invoices for and have been paid for the work performed by and the materials supplied by them.
4. That there are no outstanding claims by subcontractors and suppliers relating to Project Number 20.. -XXX.

SWORN BEFORE ME AT_____
(Location)

in the County of _____

and the Province of _____

this _____day of_____ , A.D., 20___ .

_____ _____
(Signature of Notary Public,Commissioner of the Supreme Court of N.S., etc.) **(Contractors Signature)**

By my/our signature hereunder I/we hereby identify this as the Release of Security Deposit Form referred to in this Contract executed by me/us and bearing

dated the ..... day of .....A.D., 20.....

.....
(Contractor Signature)

RELEASE FROM ALL LIABILITIES

.....

.....CONTRACT

KNOW ALL MEN BY THESE PRESENTS that I/we.....

.....of.....in the County of ..... doing business under the firm name or style of..... .....

.....

for and in consideration of the sum of one dollar ($1.00) of lawful money of Canada to me/us in hand well and truly paid by Her Majesty the Queen in right of her Province of Nova Scotia at or before the ensealing and delivery of These Presents, the receipt whereof is hereby acknowledged, have released and forever discharged and by These Presents do release and forever discharge Her Majesty The Queen in right of Her Province of Nova Scotia of and from all actions, causes of action, suits, debts, forfeitures, damages, claims and demands whatsoever

in law or in equity which I/we the said.....

.....
ever had, now have, or hereafter can, shall or might have by reason of or arising out of a certain contract or agreement respecting the.....

.....

in the County of....., dated the.....

day of.....A. D., 20....., Between.....

.....of.....

in the County of....., Province of Nova Scotia and HER MAJESTY THE QUEEN, in the right of Her Province of Nova Scotia as represented in this behalf by the HONOURABLE.....MINISTER OF TRANSPORTATION AND INFRASTRUCTURE RENEWAL of the Province of Nova Scotia, or by reason of or arising out of any breaches or breaches thereof, or by reason of or arising out of any work or labour or services performed, material supplied, or plant or machinery used in connection with the said construction by me/us,

the.....

whether under the said contract or otherwise.

IN WITNESS WHEREOF I/we, the said.....

.....have hereunto my/our hand and seal subscribed and set at the City of Halifax, the.....day of.....A. D., 20.....

Signed, Sealed and
Delivered in the
presence of,

....
Witness Contractor

Signature not to be affixed here until after fulfillment of Contract.

By my/our signature hereunder I/we hereby identify
this as the Release Form referred to in this
Contract executed by me/us and bearing date

the.....day of.....

A.D., 20.....

.....
Contractor.

Nova Scotia Department of
Transportation and Infrastructure Renewal
Halifax, N.S.

March 1, 1998

ENGINEER'S CERTIFICATE OF FINAL ESTIMATE

TO: The Honorable Minister of Transportation and Infrastructure Renewal of Nova Scotia

RE: Agreement made the _____ day of_____by and between the Department of Transportation and Infrastructure Renewal

and _____(Contractor) covering the following:

Contract:_____ _____sections in _____County.

Section 1:

Section 2:

I hereby certify that the above noted contract has been inspected on behalf of the **Engineer** and it was found that the Contractor has completed **all the work on** _____**, 20**_____ and therefore**,** recommend to
(Certificate Date)

the Minister that the final estimate be paid to _____ in accordance with the terms of the contract.
(Contractor)

The only known recoverables are as outlined in the letter attached, dated _____, 20_____

and signed by _____ Project Engineer.
(Print Name)

SIGNATURE_____
(District Director)

DATE _____

CC: Contractor_____

Note: The "Certificate Date" is the **date all the work was finished.** It is not the date of the Final Estimate or Date of Substantial Performance.

Revised 2009

NOVA SCOTIA
DEPARTMENT OF
TRANSPORTATION
AND INFRASTRUCTURE RENEWAL

Modification of Tender

Modification Number: _____

Please be advised that the following changes are requested as per

Project Number _____

Tender Number _____

Date _____

Sect. No.	Item No.	Item Description	Quantity (from Tender Document)	Unit Price Change		Extension (Quantity x Increase/Decrease)
				Increase	Decrease	
					Total Extended Difference	

As indicated above I/we wish to change my/our tender price by the following

amount $_____
(NUMERALS)

_____
(WRITTEN WORDS)

_____
Contractors Signature

_____
Company or Contractor's Name

INDUSTRY FUNDED

NSCSA

Certificate of Recognition

Safety Certification

This certificate recognizes that: **SAMPLE**

In keeping with the standards of the Principles of Loss Control Program, has:

- developed and implemented a health and safety program
- met the standards through an independent evaluation of their health and safety program

SAMPLE

General Manager
NSCSA

VP Prevention and Assessment Services
Nova Scotia
Workers' Compensation Board

Workers' Compensation Board of Nova Scotia

Date of Issue

Certificate Number

Nova Scotia Construction Safety Association
35 MacDonald Avenue Dartmouth, Nova Scotia B3B 1C6

Letter of Good Standing
Certificate of Recognition Program

Issued To:

Based upon the fact that
is an active participant in the Certificate of Recognition Program, the Nova Scotia Construction Safety Association hereby issues a letter of good standing:

Date of Issue: **Expiry Date:**

Sample

This letter of good standing is issued to a firm actively participating in NSCSA programs and whose current standing falls into the category noted below:

Certificate of Recognition ☐

Audit Pending ☐

In the Process ☐

* See reverse for category definitions

Conditions:

NSCSA Representative: _____

Phone: 423-0066 **Fax: 423-7522** **Toll Free: 1-800-971-3888**

Definitions

Certificate of Recognition

The Certificate of Recognition is awarded to firms who have completed the training requirements, fully implemented a loss control program, and successfully participated in the Audit process. His certificate is valid for a period of one year.

Audit Pending

Upon receipt of a successful internal audit, and review of same by the NSCSA, an audit date or time period will be set by Audit Services. Firms who have completed this process will be considered Audit pending

In The Process

Firms or individuals who have completed the COR courses (PLC, Leadership, PLC Audit and Safety Orientation) and have met their training obligations as outlined by the Occupational Health and Safety Act, are considered to be "In The Process"



Nova Scotia

DEPARTMENT OF TRANSPORTATION AND INFRASTRUCTURE RENEWAL

BID BOND

Bond Number: _____ Contract Number: _____

Amount: _____

KNOW ALL PERSONS BY THESE PRESENTS, that we _____

_____, as Principal

(Contractor)

(hereinafter called the "Principal") and _____

_____, as Surety,

(Bonding Company)

hereinafter called the "Surety", are jointly and severally held and firmly bound unto _____

_____, as Obligee, hereinafter called the "Obligee", and Her Successors, or its heirs, executors, administrators, successors or assigns as the case may be, in the full and just sum of _____

_____ Dollars ($)

of lawful money of Canada, to be paid unto the Obligee, for which payment well and truly to be made, we the Principal and the Surety bind ourselves, and each of our respective heirs, executors, administrators, successors and assigns, jointly and severally, firmly by these Presents.

SIGNED AND SEALED with our respective seals and dated this day of , 20

WHEREAS the Principial has submitted a written tender to the Obligee, dated the day of ,20

FORM 190/706B

for: _____

_____

_____

NOW THEREFORE THE CONDITION OF THIS OBLIGATION is such that if the Principal shall have the said tender accepted within sixty (60) days from the closing date of the tender call, and shall, within ten (10) days after the said tender is accepted, enter into the required contract with the Obligee and furnish to the Obligee a Performance Bond and Payment Bond each in the amount of fifty per cent (50%) of the contract and satisfactory to the Obligee, then this obligation shall be void, BUT OTHERWISE it shall remain in full force and effect.

PROVIDED HOWEVER, that the Surety shall not be (a) liable for a greater sum than the specified penalty of this Bond; or (b) liable for a greater sum than the difference between the amount of the Principal's tender and the amount of the tender that is accepted by the Obligee from another party to perform the work if the latter amount should be in excess of the former.

IN WITNESS WHEREOF the Principal and the Surety have executed these Presents the day and year first above-written.

SIGNED, SEALED AND DELIVERED in the presence of

_____ _____

WITNESS **PRINCIPAL**

_____

(Address)

_____

(Occupation)

FORM 190/706B

_____	)	_____
WITNESS	)	SURETY
	)	
	)	
_____	)	
(Address)	)	
	)	
	)	
_____	)	
(Occupation)	)	
	)	

* NOTE: Bid Bond Form when used by General Contractors as Tender Deposit must designate the Obligee as follows: "Her Majesty the Queen in the Right of the Province of Nova Scotia as Represented by the Minister of Transportation and Infrastructure Renewal"

FORM 190/706B



Nova Scotia

DEPARTMENT OF TRANSPORTATION AND INFRASTRUCTURE RENEWAL

PAYMENT BOND

Bond Number:_____ Contract Number: _____

Amount: $ _____

KNOW ALL PERSONS BY THESE PRESENTS, that we _____

_____, as Principal

(Contractor)

(hereinafter called the "Principal") and _____

_____, as Surety,

(Bonding Company)

(hereinafter called the "Surety") are jointly and severally held and firmly bound unto _____

_____, as Trustee, hereinafter called the "Obligee", Her Successors, or its heirs, executors, administrators, successors or assigns as the case may be, for the use and benefit of Claimants, their and each of their heirs, executors, administrators, successors and assigns, in the amount of

_____

_____, Dollars ($) of lawful money of Canada, for the payment of which sum well and truly to be made, the Principal and the Surety bind themselves, their heirs, executors, administrators, successors and assigns, jointly and severally, firmly by these Presents.

SIGNED AND SEALED with our respective seals and dated this day of , 20

FORM 192/708B

WHEREAS by an agreement in writing dated the day of ,20 , the Principal has entered into a contract with the Obligee, (hereinafter called the "Contract"); for:

_____

_____

_____

as in the Contract provided, which Contract is by reference made a part hereof, as fully to all intents and purpose as though recited in full herein;

NOW, THEREFORE, THE CONDITION OF THIS OBLIGATION is such that if the Principal shall at all times promptly make payment to all Claimants for all work, materials or services used or reasonably required for use in performance of the Contract, or as the same may be changed, altered or varied, to the satisfaction of the Obligee, then this obligation shall void, BUT OTHERWISE it shall remain in full force and effect.

PROVIDED ALWAYS, that any changes, alterations, or variations which may be made between the Principal and the Obligee or Her Successors, or its heirs, executors, administrators, successors or assigns as the case may be, in the terms of the Contract or in the nature of the work to be done thereunder, or the giving by the Obligee or Her Successors or its heirs, executors, administrators, successors, or assigns as the case may be, of any extension or extensions of time for performing the Contract, or any stipulation therein, and on the part of the Principal to be performed, or the exercise by the Obligee or Her Successors or its heirs, executors, administrators, successors, or assigns as the case may be, of any of the rights or powers reserved to the Obligee or them under the Contract, or any forbearance on the part of the Obligee or Her Successors, or its heirs, executors, administrators, successors, or assigns as the case may be, to exercise any such rights or powers, or any dealing, transaction, forbearance or forgiveness between

the Obligee or Her Successors, or its heirs, executors, administrators, successors, or assigns as the case may be, and the Principal, its heirs, executors, administrators, successors, and assigns, or any failure by the Obligee or Her Successors, or its heirs, executors, administrators, successors, or assigns as the case may be, to inform the Surety, its successors and assigns, of any of the above-mentioned matters, shall not in any way discharge, release or relieve the Principal or Surety or either of them, or either of their heirs, executors, administrators, successors or assigns, from its or their obligation or liability under this Bond.

PROVIDED FURTHER and the Principal and Surety hereby jointly and severally agree with the Obligee as Trustee that every Claimant who has not been paid in full before the expiration of a period of sixty (60) days after the date on which the last of such Claimant's work or service was done or performed or materials were placed or furnished by such Claimant, may, as a beneficiary of the trust herein provided for, sue on this Bond, prosecute the suit to final judgement for such sum or sums as may be justly due to such Claimant, and have execution thereon.

PROVIDED FURTHER, HOWEVER, that notwithstanding the above paragraph no suit or action shall be commenced hereunder by any Claimant:

(a) in respect of any claim for the amount or any portion thereof required to be held back from the Claimant under either the terms of the Claimant's contract or under the Builders' Lien Act, R.S.N.S. 1989, c. 277, before the expiration of sixty (60)days after such Claimant should have been paid such amount or any portion thereof.

(b) after the expiration of six (6) months following the date on which such Claimant should have been paid in full.

PROVIDED FURTHER and it is hereby agreed and declared that the Obligee is not obligated to do or take any act, action or proceeding against the Surety on behalf of the Claimants or any of them to enforce the provisions of this Bond.

PROVIDED FURTHER and it is hereby agreed and declared that where the Principal herein is a sub-contractor under an agreement in writing dated the day of ,20 , between the Obligee and Her Majesty the Queen in Right of the Province of Nova Scotia, for

_____

_____

as in the agreement provided, then the Surety is also bound jointly and severally with the Principal, to the Obligee to reimburse the Obligee or its Surety for any amount disbursed under a Payment Bond issued on behalf of the said Obligee with respect to any claim which would also be payable under this Bond.

PROVIDED FURTHER and it is hereby agreed and declared that the Surety shall not be liable for a greater sum than that specified in this Bond.

IN THIS BOND where there is a reference to Claimant it shall mean any person, firm or corporation doing or performing any work or service or placing or furnishing any materials, or both, for any purpose related to the performance of the Contract: work, service and materials being constructed to include all water, gas, power, light, heat, oil, gasoline, telephone, service or rental equipment which is supplied or used for or in connection with the performance of the Contract.

IN WITNESS WHEREOF the Principal and the Surety have executed these Presents the day and year first above-written.

SIGNED, SEALED AND DELIVERED in the presence of	
_____	_____
WITNESS	**PRINCIPAL**
_____	
(Address)	
_____	
(Occupation)	
	_____
_____	**SURETY**
WITNESS	
_____	
(Address)	
_____	
(Occupation)	

1 NOTE: Payment Bond Form when used by General Contractors as Security for Contract must designate the Obligee as follows: "Her Majesty the Queen in Right of the Province of Nova Scotia as Represented by the Minister of Transportation and Infrastructure Renewal."

FORM 192/708B



Nova Scotia

DEPARTMENT OF TRANSPORTATION AND INFRASTRUCTURE RENEWAL

PERFORMANCE BOND

Bond Number:_____ Contract Number: _____

Amount: $ _____

KNOW ALL PERSONS BY THESE PRESENTS, that we _____

_____, as Principal

(Contractor)

(hereinafter called the "Principal"), and _____

_____, as Surety,

(Bonding Company)

(hereinafter called the "Surety") are jointly and severally held and firmly bound unto _____

_____, as Obligee, (hereinafter called the "Obligee") and Her Successors, or its heirs, executors, administrators, successors or assigns as the case may be, in the amount of _____

_____, Dollars ($) of lawful money of Canada, to be paid unto the Obligee, Her Successors, or its heirs, executors, administrators, successors or assigns, as the case may be, for which payment well and truly to be made, we the Principal and the Surety bind ourselves, and each of our respective heirs, executors, administrators, successors and assigns, jointly and severally, firmly by these Presents.

SIGNED AND SEALED with our respective seals and dated this day of , 20

FORM 191/707B

WHEREAS by an agreement in writing dated the day of ,20 , the Principal has entered into a contract with the Obligee, (hereinafter called the "Contract"), for:

_____

_____

_____

as in the Contract provided, which Contract is by reference made a part hereof, as fully to all intents and purpose as though recited in full herein;

NOW, THEREFORE, THE CONDITION OF THIS OBLIGATION is such that if the Principal, its heirs, executors, administrators, successors and permitted assigns, shall at all times well and truly perform and observe all the covenants, agreements, terms and conditions of the Contract on its and their part to be performed and observed, then this obligation shall be void, BUT OTHERWISE it shall remain in full force and effect.

PROVIDED THAT any changes, alterations, or variations which may be made between the Principal and the Obligee, Her Successors, or its heirs, executors, administrators, successors or assigns as the case may be, in the terms of the Contract, which do not increase the amount of the Contract by more than fifteen per cent (15%), or in the nature of the work to be done thereunder, or the giving by the Obligee or Her Successors or its heirs, executors, administrators, successors, or assigns as the case may be, of any extension or extensions of time for performing the Contract or any stipulation therein, and on the part of the Principal to be performed, or the exercise by the Obligee, Her Successors, or its heirs, executors, administrators, successors, or assigns as the case may be, of any of the rights or powers reserved to the Obligee or them under the Contract, or any forbearance on the part of

the Obligee, Her Successors, or its heirs, executors, administrators, successors, or assigns as the case may be, to exercise any such rights or powers, or any other dealing, transaction, forbearance or forgiveness between the Obligee, Her Successors, or its heirs, executors, administrators, successors, or assigns as the case may be, and the Principal, its heirs, executors, administrators, successors, and assigns, or any failure by the Obligee or Her Successors, or its heirs, executors, administrators, successors, or assigns as the case may be to inform the Surety, its successors and assigns, of any of the above-mentioned matters, shall not in any way discharge, release or relieve the Principal or Surety or either of them, or either of their heirs, executors, administrators, successors or assigns, from its or their obligation or liability under this Bond.

PROVIDED FURTHER and the Surety shall not be liable for a greater sum than that specified in this Bond.

PROVIDED FURTHER that any suit under this Bond must be instituted before the expiration of one (1) year from date of acceptance by the Obligee of the finished work under the Contract.

IN WITNESS WHEREOF the Principal and the Surety have executed these Presents the day and year first above-written.

SIGNED, SEALED AND DELIVERED in the presence of	)	
_____	)	_____
WITNESS	)	**PRINCIPAL**
_____	)	
(Address)	)	
_____	)	
(Occupation)	)	
_____	)	_____
WITNESS	)	**SURETY**
_____	)	
(Address)	)	
_____	)	
(Occupation)	)	

* **NOTE:** Performance Bond Form when used by General Contractors as Security for Contract must designate the Obligee as follows: "Her Majesty the Queen in Right of the Province of Nova Scotia as Represented by the Minister of Transportation and Infrastructure Renewal."

FORM 191/707B



Nova Scotia

DEPARTMENT OF TRANSPORTATION AND INFRASTRUCTURE RENEWAL

CONTRACT MAINTENANCE BOND

Bond Number:_____ Contract Number: _____

Amount: $ _____

KNOW ALL PERSONS BY THESE PRESENTS, that we _____

_____, as Principal

(Contractor)

(hereinafter called the "Principal") and _____

_____, as Surety,

(Bonding Company)

(hereinafter called the "Surety") are jointly and severally held and firmly bound unto Her Majesty the Queen in Right of the Province of Nova Scotia as Represented by the Minister of Transportation and Infrastructure Renewal, as Obligee,(hereinafter called the "Obligee") and Her Successors, in the full and just sum of

_____

_____, Dollars ($)

of lawful money of Canada, to be paid unto the Obligee, for which payment well and truly to be made, we the Principal and the Surety bind ourselves, and each of our heirs, executors, administrators, successors and assigns, jointly and severally, firmly by these Presents.

SIGNED AND SEALED with our respective seals and dated this day of , 20

WHEREAS by an agreement in writing dated the day of ,20 , the Principal has entered into a contract with the Obligee, (hereinafter called the "Contract");

for: _____

FORM 190/709B

_____

_____

AND WHEREAS it is provided in the Contract that the Principal shall maintain and repair the work _____

_____

(Description of work to be maintained)

for _____ after the date

(Period of time)

of acceptance of the Contract, being from the date of _____

_____

NOW THEREFORE, THE CONDITION OF THIS OBLIGATION is such that if the Principal, its heirs, executors, administrators, successors and assigns, shall faithfully maintain, repair and keep in repair the said work in accordance with the Contract, and according to the terms, covenants and conditions thereof, for the period of time specified above, then this obligation shall be void, BUT OTHERWISE it shall remain in full force and effect.

PROVIDED HOWEVER,

(a) That in the event of a failure on the part of the Principal in the maintenance or repair of the said work, written notice thereof, with a verified statement of the particular facts, showing such failure and the date thereof, shall, within thirty (30) days after such failure has come to the notice of the Obligee, be given to the Surety at

_____

_____

(b) That in case of such default on the part of the Principal, the Surety shall have the right, if it so desires, to complete or procure the completion from time to time of any necessary repairs.

FORM 190/709B

(b) That in no event shall the Surety be liable for any maintenance or repair of work damaged or destroyed by an act of God, or the public enemies, or mobs, or riots, or civil commotion; nor in any event shall the Surety be subject to any suit, action or other proceeding upon this Bond that is instituted later than the

_____

_____

AND PROVIDED FURTHER that the Surety shall not be liable under any other bond issued with respect to the Contract.

SIGNED, SEALED AND DELIVERED in the presence of	
_____	_____
WITNESS	**PRINCIPAL**
_____	
(Address)	
_____	
(Occupation)	
	_____
_____	**SURETY**
WITNESS	
_____	
(Address)	
_____	
(Occupation)	

FORM 190/709B

Statutory Declaration
of Progress Payment Distribution by Contractor

Standard Construction Document
CCDC 9A - 2001

To be made by the Contractor prior to payment when required as a condition for either:

☐ second and subsequent progress payments ; or

☐ release of holdback.

The last application for progress payment for which the Declarant has received payment is No. 1

dated the _____ day of _____,

in the year _____

Identification of Contract

Name of Contract (Location and description of the Work as it appears in the Contract Documents)

Date of Contract: _____ *Day* _____ *Month* _____ *Year*

Name of Owner

Name of Contractor

Identification of Declarant

Name of Declarant

Position or Title (of office held with Contractor)

Declaration

I solemnly declare that, as of the date of this declaration, I am an authorized signing officer, partner or sole proprietor of the Contractor named in the Contract identified above, and as such have authority to bind the Contractor, and have personal knowledge of the fact that all accounts for labour, subcontracts, products, services and construction machinery and equipment which have been incurred directly by the Contractor in the performance of the work as required by the Contract, and for which the Owner might in any way be held responsible, have been paid in full as required by the Contract up to and including the latest progress payment received, as identified above, except for:

1) holdback monies properly retained,
2) payments deferred by agreement, or
3) amounts withheld by reason of legitimate dispute which have been identified to the party or parties, from whom payment has been withheld.

I make this solemn declaration conscientiously believing it to be true, and knowing that it is of the same force and effect as if made under oath.

Declared before me in _____
City/Town and Province

this _____ day of _____ In the year ____

_____ *Signature of Declarant*

_____ *(A Commissioner for Oaths, Notary Public, Justice of the Peace, etc.)*

Note 1: The Declaration must be made by the President, a Vice President, the Secretary, the Treasurer, or a Director of an incorporated company except that another individual may make the Declaration provided that two copies of the by-law issued under the Corporation seal authorizing such individual to execute documents accompanies the first Declaration on each Contract / Subcontract. For a partnership the Declaration must be made by one of the partners and for a sole proprietorship the sole proprietor himself must make the Declaration. The position of the declarant and the name of the Contractor / Subcontractor must be clearly noted.

Note 2: Other indebtedness shall mean only such debts incurred by the Contractor /Subcontractor to persons in privity of contract with him, debts arising out of statutory requirements, and in the case of the Contractor's / Subcontractor's workers any debt arising out of collective bargaining agreements, legislation applying to worker's compensation, unemployment insurance and minimum wage standards where applicable.

SAMPLE

SURETY PROVIDER'S NAME

No. _____

SURETY'S AGREEMENT TO BOND

Principal:	CONTRACTOR'S NAME (hereinafter called the Contractor)
Obligee:	HER MAJESTY THE QUEEN IN RIGHT OF THE PROVINCE OF NOVA SCOTIA AS REPRESENTED BY THE MINISTER OF TRANSPORTATION AND PUBLIC WORKS (hereinafter called the Obligee)
Tender Date:	PROJECT TENDER DATE
Project:	In consideration of the owner accepting the tender and executing an agreement with the Contractor for: (PROJECT NUMBER AND DESCRIPTION)
Surety:	SURETY PROVIDER'S NAME

as Surety, agrees to execute a Performance Bond in favour of the Owner for FIFTY PERCENT OF THE CONTRACT PRICE (50%), conditioned for the performance of the work described herein and the contract between the Contractor and Obligee.

The Surety, also agrees to execute a Labour & Material Payment Bond for FIFTY PERCENT OF THE CONTRACT PRICE (50%), with respect to the above mentioned project.

PROVIDED HOWEVER, that the Surety's obligation shall expire SIXTY (60) days from the closing date of this tender and no action shall be taken against the Surety after the SIXTY (60) days have expired.

SIGNED, SEALED AND DATED (date)

SURETY PROVIDER'S NAME

_____
Name and Title of Person with
Signing Authority

SAMPLE

CERTIFICATE OF SUBSTANTIAL PERFORMANCE

Work: _____ Tender No.: _____

_____ Project No.: _____

Contractor: _____ Client Dept.: _____

Project Eng.: _____ Contract Date: _____

This is to certify that work on the contract was substantially performed on _____, 20___. A description of the work not yet performed and/or required repairs at the date of substantial performance is attached.

Name and Title of person authorized to act in the capacity of the Minister of DTPW:

_____ Project Engineer

Name: (please print) Title

_____ _____

Signature Date

Name and Title of person approving the Certificate of Substantial Performance for DTPW:

_____ Construction Manager

Name: (please print) Title

_____ _____

Signature Date

Original: Manager of Financial Services
cc: District Director, Project Engineer, Mgr. Highway Construction Services or Mgr. Structural Engineering, Contractor

Revised February 1, 2008

RELEASE

IN CONSIDERATION of the delivery and unloading of fill material, **THE UNDERSIGNED** hereby for themselves, their administrators, successors and assigns release and forever discharge the **Department of Transportation and Infrastructure Renewal** from any and all action, causes of action, claims and demands for upon or by reason of any damage to property which heretofore has been or hereafter may be sustained in consequences of the material delivered in the County of _____,

Nova Scotia on or about the _____ day of _____ 20 _____.

THE UNDERSIGNED hereby affirm the disposal site is not a wetland. Further, **THE UNDERSIGNED** hereby agrees the surplus excavated material shall not be placed in a wetland unless specifically permitted by the Nova Scotia Department of Environment and Labour. The **Contractor and/or recipient** of the surplus excavated material will be held responsible for all environmental permitting and liability.

AND FOR THE SAID CONSIDERATION, the undersigned agree not to make claim or take proceedings against any other person or corporation who might claim contribution or indemnity under the provisions of any statute or otherwise.

WITNESS . . . . . . this _____ day of _____, 20 _____.
(DAY) (MONTH)

IN THE PRESENCE OF:

X _____
Resident *(please print)*

X _____
Contractor *(please print)*

X _____
Signature of Resident *(please write)*

X _____
Signature of Contractor *(please write)*

Address of Resident:

_____
Civic number, Road name, City/town/village, Postal Code

Location of Material Disposal: *(if different from resident's address)*

_____
Civic number, Road name, City/town/village, Postal Code

PROPOSED

NOVA SCOTIA REGULATION 1981

UNDER THE ENVIRONMENTAL PROTECTION ACT, 1973

ASPH ALT PAVING PLANT REGULATION

Section A

1. This Regulation will be known as the “Asphalt Paving Plant Regulation”, issued under the Environmental Protection Act, Chapter 6 Statues of Nova Scotia, 1973.

2. In this Regulation:

   (a) “Minister” means Minister of the Environment;

   (b) “Act” means the Nova Scotia Environmental Protection Act;

   (c) “Asphalt Paving Plant” means a plant or any part thereof in which asphalt concrete is produced by heating and drying aggregate and mixing with asphalt cement;

   (d) “Aggregate Material” means any material or materials including, but not limited to, gravel, slag, limestone, crushed rock, sand, or any combination of such materials used to produce asphalt paving when mixed with bituminous asphalt;

   (e) “Permanent Asphalt Paving Plant” means an asphalt paving plant which remains in one location more than two (2) construction seasons;

   (f) “Portable Asphalt Paving Plant” means an asphalt paving plant which does not remain in one location more than two (2) construction seasons:

   (g) “Application” means an application for approval and/or permit of authorization for an asphalt paving plant made under Section 23 of the Environmental Protection Act;

   (h) “Liquid Effluent” includes treatment pond effluent or treatment facility seepage, but does not include storm water runoff;

   (i) “Particulate Matter” means any finely-divided liquid or solid material other than water droplets;

   (j) “Operation Area” includes all the land and works that are used, or have been used by past or present activities and, without limiting the generality of the foregoing; includes open pits, buildings, stockpile area, active and abandoned waste, rock dumps, treatment ponds, cleared or disturbed areas adjacent to the above segments of the operation, ditches and portions of watercourses or water bodies whose character has been altered by activity;

   (k) “Standard Condition” means twenty-five degrees celsius (25^0C), and at an atmospheric pressure of seven hundred and sixty (760) millimetres of mercury;

   (l) “Undiluted Exhaust Gas” means any gas or combination of gases that are released or discharged into the air and that are not or have not been diluted by the artificial addition of air from any source;

   (m) “Stack Test” means the measurement of particulate emissions as set down in Environment Canada’s Report EPS 1-AP-74-1. “Standard Reference Methods for Source Testing: Measurement of Emissions of Particulate from Stationery Sources.”

Section B

1. Application for Permit or Approval

Anyone who applies for a permit and/or approval of an asphalt paving plant under Section 23 of the Environmental Protection Act must furnish the following information and documents.

(a) a topographic map indicating location of plant and affected watercourses;

(b) a survey plan or certified plot plan of the area indicating:

(i) the projected site for the asphalt paving plant, property boundaries and ownership*, storage and handling of aggregate materials, and location of settling ponds and watercourses indicating from where water is to be withdrawn;

(ii) the layout of public highways, access roads, watercourses, wells, houses, and any other development within a radius of 1200 feet or 350 metres from the asphalt paving plant;

*Written permission of adjacent landowners must accompany this application if any part of the asphalt plant facilities are to be located on or within the required minimum separation distances from adjacent properties.

(c) make, model number, plans and specifications of asphalt paving plant and equipment, including any devices designed to abate or eliminate the emission, deposit, issuance of discharge of contaminants into the environment;

(d) a report describing the operating conditions, the operation of equipment and machinery, type of fuel used, the volume of production in tons per hour, and the methods of eliminating wastes and residue;

(e) a calculation of particulate matter emitted into the atmosphere in micrograms per cubic meter;

(f) the plans and specifications of the water supply and wastewater disposal equipment, and an approved Water Rights Application must be received from the Nova Scotia Department of the Environment.

Section C

1. Minimum Separation Distances:

(a) The asphalt paving plant and the loading, unloading and discharge areas of aggregate stockpiles shall be situated at distances to be specified, but in no case less than the following:

(i) 1200 feet from any territory zoned for residential, commercial, parks or recreational use;

(ii) 300 feet from any residence property boundary;

(iii) 100 feet from any other property boundary;

(iv) 100 feet from any surface watercourse;

(v) 100 feet from the road allowance of any common and public highway.

(b) Settling ponds shall be situated at a distance to be specified, but in no case less than the following:

(i) 100 feet from any surface watercourse;

(ii) 300 feet from any source of domestic water supply;

(iii) 100 feet from any property boundary.

Section D

1. Water Effluent

(a) all industrial process water shall be arranged in closed circuit;

(b) settling ponds designed to control and treat surface runoff shall have a minimum volume of forty (40) cubic metres per one thousand (1000) square metres (0.125 acre-feet/acre) of disturbed area draining to the ponds;

(c) all storm runoff from the operating site shall be collected and treated to meet the following suspended solids concentrations prior to discharge outside the property boundaries or to any watercourse;

(i) maximum suspended solids concentration in any grab sample - 100 mg/l;

(ii) maximum arithmetic monthly average of at least four tests for suspended solids concentration - 50 mg/l.

2. Air Emissions:

(a) sources of fugitive emissions should leave via the stack. These sources may include but are not limited to, hot screen, bucket elevators, weigh hoppers and mixing bins;

(b) no person shall operate or permit the operation of an asphalt paving plant from which emissions are released or discharged if that asphalt paving plant emits or can emit particulate matter in excess of 500 milligrams per cubic metre of dry, undiluted exhaust gas at standard conditions;

(c) if the Minister has reasons to believe that an asphalt paving plant is in violation of this regulation, they may require that an emission test be conducted to determine plant emissions. The undertaking and cost of this test will be the responsibility of the owner or operator of the asphalt paving plant, and such test will be done by a person or persons acceptable to the Department.

Section E

1. Area Maintenance:

(a) aggregate stockpiles and access roads shall be situated and controlled such that a dust problem does not occur;

(b) rejected fine material and waste asphalt must be disposed of in a manner approved by the Department before commencement of operation of the plant;

(c) the area disturbed during the operation of the plant will be rehabilitated to the satisfaction of the Nova Scotia Department of the Environment.

Section F

1. Noise:

No person shall operate or permit the operation of an asphalt paving plant which is responsible for causing sound levels in areas outside the operations area where people live, work, or take part in recreation to exceed any of the following:

An Leq of 65 dBA between the hours of 0:700 to 19:00 hours

An Leq of 60 dBA between the hours of 19:00 to 23:00 hours

An Leq of 55 dBA between the hours of 23:00 to 0:700 hours.

Leq is the energy equivalent continuous sound pressure level expressed by the equation

$$Leq = 10\ 1/\psi I_0\ \psi SPL/10\ dt$$

Nova Scotia Department of
Transportation and Communications
Halifax, Nova Scotia

March 1, 1994

NOVA SCOTIA DEPARTMENT OF THE ENVIRONMENT

PIT & QUARRY GUIDELINES

Revised May 1999

I. DEFINITIONS

Abandonment Means cessation of production of aggregate for a period of 12 months.

Active Area Active area shall be considered the area required to operate a pit of quarry. This includes the site Aworking face@ and associated works.

Administrator Means a person appointed by the Minister, and includes an acting administrator.

Aggregate Is all consolidated and unconsolidated material excluding, gypsum, limestone, peat or minerals as defined under the *Mineral Resources Act.*

Associated Works Means any building, structure, processing facility, pollution abatement system or stockpiles of aggregate.

Department The Nova Scotia Department of the Environment

Disturbed Area Any area on a pit or quarry site that has been stripped of vegetation and is susceptible to erosion.

Liquid Effluents Storm run-off, wash water, or any other liquid waste.

Minister The Honourable Minister of the Environment for the Province of Nova Scotia**.**

Pit An excavation made for the purpose of removing aggregate without the use of explosive.

Quarry An excavation, requiring the use of explosives, made for the purpose of removing consolidated rock from the environment.

Rehabilitation Restorative work performed or to be performed in accordance with the approved rehabilitation plan.

Rehabilitation Plan Is a written plan approved by the Department to provide for partial or total abandonment of the pit or quarry and may include an initial rehabilitation plan, progressive rehabilitation or a final rehabilitation plan.

Scrap All waste material including rejected metal, lumber and tree stumps.

Watercourse Is the bed and shore of every river, stream, lake, creek, pond, spring, lagoon, or other natural body of water, and the water therein, within the jurisdiction of the Province, whether it contains water or not, and all ground water.

II. Application

(1) These guidelines apply to all pit and quarry operations as defined under Division V part 2 (e) and (f) of the Activities Designation Regulations.

(2) Notwithstanding subsection II (1), an approval is not required in relation to

(a) pit and quarry operation, where the aggregate is utilized for public purposes by or for the Department of Transportation & Infrastructure Renewal;

(b) land being cut for road or highway construction; or

(c) where the primary purpose of aggregate removal is for development and not for aggregate production.

(3) With respect to operations noted in II (2) (a) the Department of Transportation & Infrastructure Renewal shall ensure these operations adhere to these guidelines. However, the Department of the Environment will have the final authority on any matter relating to interpretation and enforcement.

III. Separation Distances For Pit Operations

(1) No person responsible for the operation of a pit shall locate the active area within:

(a) 30 m of the boundary of a public or common highway unless the person has consent from the Department of Transportation & Infrastructure Renewal to operate closer;

(b) 30 m of the bank of any watercourse or ordinary high water mark;

(c) 30 m of the boundary of the pit property;

(2) No person responsible for the operation of a pit shall locate the excavation “working face” of the pit within:

(a) 30 m of the boundary of a public or common highway unless the person has consent from the Department of Transportation & Infrastructure Renewal;

(b) 30 m of the bank of any watercourse or ordinary high water mark;

(c) 90 m of the foundation or base of a structure located off site. Structure includes but is not limited to a private home, a cottage, an apartment building, a school, a church, a commercial building or, a treatment facility associated with the treatment of municipal sewage, industrial or landfill effluent, an industrial building or structure, a hospital and a nursing home, etc.*

(d) 15 m of the property boundary when a structure on the abutting property is not involved.

NOTE* This distance is measured from the working face of the pit to the foundation or base of the structure. This distance can be reduced with written consent from all individuals owning structures within 90 m.

IV. Separation Distances for Quarry Operations

(1) No person responsible for the operation of a quarry shall locate the associated works within:

(a) 30 m of the boundary of a public or common highway unless the person has written consent from the Department of Transportation & Infrastructure Renewal to operate closer;

(b) 30 m of the bank of any watercourse or the ordinary high water mark;

(c) 30 m of the boundary of the property on which the quarry is located;

(2) No person responsible for the operation of a quarry shall blast within:

(a) 30 m of the boundary of the public or common highway unless the person has written consent from the Department of Transportation & Infrastructure Renewal ;

(b) 30 m of the bank of any watercourse or the ordinary high water mark;

(c) 800 m of the foundation or base of a structure located off site. Structure includes but is not limited to a private home, a cottage, an apartment building, a school, a church, a commercial building, a treatment facility associate with the treatment of municipal sewage, industrial or landfill effluent, an industrial building or structure, a hospital, nursing home etc.*

(d) 15 m of the property boundary when a structure on the abutting property is not involved.

NOTE:* The separation distance is measured from the working face and point of blast to the foundation or base of the structure. This distance can be reduced with written consent from all individuals owning structures within 800 m.

V. Liquid Effluent Discharge Levels

(1) All storm run-off from the operating site and all liquid effluents resulting from the operation shall be collected and treated to meet the following suspended solids concentrations prior to discharge into a watercourse or beyond the property boundaries:

(a) Maximum suspended solids concentration in any grab sample - 50 mg/l;

(b) Maximum arithmetic monthly average suspended solids concentration - 25 mg/l;

(2) All wash water systems shall be arranged in closed circuit.

VI. Suspended Particulate Levels

(1) If requested by NSDOE dust emission and particulate matter shall be monitored at a monitoring point located beyond the property boundary of the pit or quarry and shall not exceed the following limits at or beyond the property boundary:

Parameter	**Max. Limit**
Suspended Particulate	60-70 $\Phi g/m^3$ annual geometric mean
	120 $\Phi g/m^3$ average concentration over a 24 hour period

(2) Suspended Particulate Matter shall be measured by the High Volume Method as described in Report No. E.P.S. 1-AP-73-2.

(3) Monitoring stations shall be located on the property line of the site being monitored, or at other locations as directed by the Minister or Administrator.

VII. Sound Level Limits

(1) The following sound level limits shall be observed at the property boundaries of the pit or quarry:

Leq. Sound Level Limits *

"Night"	**"Evening"**	**"Day"**
55 dBA	**60 dBA**	**65 dBA**

Night: 23:00 - 08:00, All Day Sunday and Statutory Holidays

Evening: 19:00 - 23:00 Hours

Day: 07:00 - 19:00 Hours

NOTE:* The equivalent sound level is measured in Terms of dBA. The equivalent sound level, then, takes into account the major factors influencing the effect of noise on man, magnitude, frequency range and time variation.

(2) Monitoring stations shall be located on the property line of the site being monitored or at other locations as directed by the Minister or Administrator.

VIII. Blasting

(1)(a) No person responsible for the operation of a quarry shall permit any blasting on site to exceed the following limits:

Concussion (Air Blast) 128 dBA	Within 7m of the nearest structure not located on the property where the blasting operations occur, or other locations as directed by the Minister or Administrator.

Ground Vibration: 0.5 in./sec. (12.5 mm/s) Peak Particle Velocity	Measured below grade or less than 1m above grade in any part of the nearest structure not located on the property where blasting occurs, or other locations as directed by the Minister or Administrator.

(1)(b) No person shall fail to monitor all blasts for the parameters outlined in VIII (1)(a).

(2) Monitoring results shall be forwarded to the Department on a monthly basis unless otherwise indicated.

(3) No blasting shall occur on Sunday, on a statutory holiday prescribed by the Province, or on any day between the hours of 1800 hours and 0800 hours.

(4) Every person responsible for the operation of quarry shall have a technical blast design prepared by a qualified person which ensures the ground vibration and air concussion outlined in VIII(1) can be achieved.

(5) Every person responsible for the operation of a quarry shall conduct a pre-blast survey of all structures within 800 m of the point of blast. This survey should be conducted in accordance with the Department of the Environment's "Procedure For Conducting a Pre-Blast Survey".

(6) No blasting is to take place if a thermal inversion is anticipated at the time of the proposed blast.

IX. Rehabilitation

(1) Every person responsible for the operation of a pit or quarry shall

(a) within six (6) months of receiving an approval submit an interim security in amounts outlined in the section titled Security X (3) & (4);

(b) before the expiry of the time period referred to in section X (2) the proponent shall post a final security which shall be calculated using the rehabilitation plan and the factors outlined in section X (5)

(c) within twelve (12) months of abandonment of the pit or quarry the site shall be rehabilitated to the satisfaction of the department and in accordance with an approved rehabilitation plan.

X. Security

(1) Every person responsible for the operation of a pit or quarry shall post a security in accordance with the provision of Section 13 of the Approvals Procedure Regulation and Section 57 of the Environment Act.

(2) The Proponent shall post an interim security in the amounts noted in sections (3) & (4) until a final calculation referred to in section (5) is calculated. The interim security shall not exceed one (1) year unless otherwise agreed upon in writing by the Administrator.

(3) The amount of security for a pit shall be $6250.00/ha ($2500.00/acre) of disturbed

area.

(4) The amount of security for a quarry shall be $6250.00/ha ($2500.00/acre).

(5) Before the expiry of the interim security, the Proponent shall submit a rehabilitation plan. This rehabilitation plan shall include the estimated total cost for labour, equipment, supplies and services to undertake the following activities:

(i) surface contouring;
(ii) establishing proper drainage;
(iii) revegetation work; or
(iv) any work necessary to reclaim the pit or quarry

XI. Protection of Groundwater Resources

Prior to any excavation below the watertable a hydrological study will be required and approval must be obtained from the Minister or Administrator.

DATED at Halifax, Nova Scotia, this 4th day of May, 1999.

George Fox
Deputy Minister

Nova Scotia

Department of the Environment

NOVA SCOTIA WATERCOURSE ALTERATION SPECIFICATIONS (1997)

Legal Conditions:

1.0 DEFINITIONS

1.01 "*Act*" means the *Environment Act*, S.N.S 1994-95, C.1.

1.02 "Approval Holder" includes the applicant, authorized heirs, successors and assigns of the Approval Holder.

1.03 "Minister" means the Minister of the Environment or person designated an Administrator of Water Approvals.

2.0 EXTENSION OF TIME

2.01 The time within which the work authorized by this Approval must be completed may, at the option of the Minister, be extended for a prescribed period, subject to any changes in the Terms and Conditions set forth in the Approval and provided the Approval Holder has complied with the Terms and Conditions of the existing Approval.

3.0 RESERVATIONS/LIMITATIONS

3.01 The Approval Holder may alter the watercourse, or store water in any watercourse as authorized and, without limiting the generality of the foregoing, shall not alter or use the watercourse so as to:

a) prejudice any riparian rights of any owner or of any person lawfully in possession of or holding any lands abutting the watercourse or any rights therein;
b) suffer any loss, damage or nuisance to adjacent or abutting lands.

3.02 The Approval Holder shall not at any time or for any purpose place a pecuniary value on or claim any pecuniary value for the rights and privileges granted by this Approval, whether considered alone or in conjunction with any other property rights or privileges, over and above the amounts, if any, actually paid to the Minister by the Approval Holder for said rights and privileges.

3.03 It is recognized and agreed that this Approval does not give sole or exclusive rights to any watercourse, and the Minister reserves the right to use the watercourse and water therein for any purpose and to allow others to use the watercourse and water for any purpose, provided that such use or purpose does not constitute a substantial interference with the rights granted to the Approval Holder.

4.0 TERMS AND CONDITIONS

4.01 The Approval Holder shall not assign, sell, lease or transfer this Approval without the written consent of the Minister, whose consent will not be unreasonably withheld, and any assignment or transfer shall be subject to such Terms and Conditions as the Minister may impose.

4.02 The Approval Holder shall comply with all municipal, provincial and federal laws and regulations including but not limited to those laws and regulations relating to the environment, fisheries, public health and fire hazards and the *Approvals Procedure Regulations*.

4.03 The Approval Holder shall be responsible for obtaining and paying the costs of any and all approvals, services, easements, rights of way and authorizations of any kind necessary for the performance of any activities undertaken pursuant to this Approval. The Minister does not covenant that such approvals, services, easements, rights of way and authorizations of any kind will be issued by the Province of Nova Scotia, any other body or person.

4.04 Work undertaken by the Approval Holder shall at all times conform with the Terms and Conditions of the Approval, including the applicable Watercourse Alteration Specifications.

4.05 The Approval Holder shall maintain any bridge, culvert, dam, sluice, flume, conduit or other structure built or used in or on the watercourse in a state of good repair and in a clean and tidy condition to the satisfaction of the Minister. The Approval Holder shall conform to any and all directions of the Minister concerning the rehabilitation of a watercourse or the construction, reconstruction, maintenance, removal, operation and location of any bridge, culvert, dam, sluice, flume, conduit or other structure built, used or maintained in and on the watercourse.

4.06 The Minister and all persons designated as inspectors pursuant to the *Act* shall have free access at all times to the watercourse, any structure built, operated or maintained in and on the watercourse and to land under control of the Approval Holder associated with the works to ensure that the Terms and Conditions of the Approval are being fulfilled.

4.07 The Approval Holder shall indemnify and save harmless the Minister against any loss, cost or damage occasioned by the Approval Holder's relocation of a watercourse or the construction of, repair, alteration or addition to any culvert, bridge, dam, sluice, flume, conduit or other structure. Such indemnity shall include, but not be restricted to, all losses, costs or damages occasioned by the improper or faulty relocation of a watercourse or the improper or faulty construction of, repair, alteration or addition to any culvert, bridge, dam, sluice, flume, conduit or other structure in or on the watercourse, or by any trespass, negligence or willful act of the Approval Holder or any employees, agents, contractors or guests of the Approval Holder.

4.08 On the expiry or termination of this Approval or at the end of the useful life of the structure, as determined by the Minister, the Approval Holder shall immediately cease operations and peaceably and quietly yield up and deliver possession of the watercourse in a condition satisfactory to the Minister, and the Minister shall incur no further expense, liability or cost in this regard.

4.09 The Approval Holder shall remove any bridge, culvert, dam, sluice, flume, conduit or other structure or remnants thereof, and any equipment or personal property built, used or maintained in and on the watercourse at the end of the useful life of the structure, to the satisfaction of the Minister. In the event the Approval Holder fails to remove such bridge, culvert, dam, sluice, flume, conduit or other structure or remnants thereof and any equipment or personal property, the Minister may, without any attaching liability, remove or demolish the same in whatever manner the Minister deems necessary. The Approval Holder shall pay all expenses and costs of such removal or demolition.

4.10 The Minister or any employee, servant or agent of the Department will not be liable for any damage, loss or claim of any kind which may or hereafter arise.

5.0 AMENDMENTS

5.01 This Approval shall not be changed, modified or discharged orally. Any changes shall be made in writing and, when agreed upon by both parties, shall be incorporated and form part of this Approval.

6.0 TERMINATION/SUSPENSION

6.01 If at any time during the term of this Approval there be any default, breach or nonobservance by the Approval Holder in respect of any covenant, proviso, or these Terms and Conditions or reservation herein contained, or the Approval Holder has failed to use the watercourse as stipulated in the Approval, the Minister may suspend or terminate the Approval after giving the Approval Holder notice of the breach or default and five business days to remedy the same.

6.02 If the Approval Holder assigns or sublets their Approval or any part thereof except as is expressly provided herein, if the contractor becomes bankrupt or insolvent, if a receiver is appointed for any part of the assets of the Approval Holder, if any assignment is made for the benefit of the creditors of the Approval Holder, or if it is wound up or goes into liquidation, the Minister may terminate the Approval.

7.0 ENUREMENT

7.01 This Approval shall enure to the benefit of and be binding upon the Minister, the Minister's successors, assigns and authorized representatives, and upon the Approval Holder, and the heirs, administrators, executors and assigns of the Approval Holder.

8.0 WAIVER

8.01 The failure of the Minister to insist upon a strict performance of any covenant, proviso or Terms and Conditions contained in this Approval shall not be deemed a waiver of any rights or remedies that the Minister may have and shall not be deemed a waiver of any subsequent breach or default in the covenants, provisos or Terms and Conditions contained in this Approval.

9.0 NOTICE

9.01 Any notice or document required to be given by this Approval shall be sufficiently given if delivered or mailed postage prepaid:

a) to the Minister at the Regional Office of the Department of the Environment, indicated on the Approval, or at such other address as the Minister may direct from time to time.
b) to the Approval Holder at the address shown on the front of the Approval.

9.02 The Approval Holder shall notify the Minister in writing of any change in the above address.

9.03 Any notice or document mailed to the Minister or Approval Holder shall be deemed to have been received five days following the day such notice was posted.

10.0 RELEASE OF INFORMATION

10.01 Subject to limitations provided in the *Freedom of Information and Protection of Privacy Act*, the Approval Holder consents to the release of the issuance of this Approval to third parties and all reports, monitoring data and other information respecting the Approval.

11.0 NEW INFORMATION

11.01 An Approval Holder shall forthwith submit to the Minister any new and relevant information respecting any adverse effect that actually results or may potentially result from the activity to which the Approval relates that comes to the attention of the Approval Holder after the issuance of the Approval.

Nova Scotia

Department of the Environment

NOVA SCOTIA WATERCOURSE ALTERATION SPECIFICATIONS (1997)

General Specifications:

G1. Copies of all Approvals together with the Terms and Conditions of Approval are to be available on the site at all times during construction. All instream work is to be carried out under low flow conditions and during the period of June 1 to September 30, unless otherwise identified in the Water Approval.

G2. On-site machinery and potential pollutants are to be stored in an area above the flood water limits.

G3. Fuel storage and refuelling or lubrication of equipment is only approved in designated areas. These areas are to be located such that accidental pollutant discharge will not enter surface water or domestic water supplies. Under no circumstances will the designated area be within 30 metres (100 feet) of a watercourse or wetland. Note: this clause is not applicable to pile-driving equipment.

G4. Equipment required to work within a watercourse is to be mechanically sound, having no leaking fuel tanks or hydraulic connections.

G5. Machinery and equipment (eg., concrete trucks) are not to be washed out within 30 metres (100 feet) of a body of water or in an area where wash water will run into a watercourse.

G6. All construction debris is to be contained where flood water will not come in contact with the debris until the debris is properly removed from the site.

G7. No additional watercourse or wetland alteration is to take place unless prior authorization from the Nova Scotia Department of the Environment has been given.

G8. The Approval Holder must adhere to the Federal Department of Fisheries and Oceans' requirements for fish passage and blasting in or near a watercourse.

G9. Slates or shales are not to be used without prior written consent from the Nova Scotia Department of the Environment. Immediately notify the assigned Inspector when slates or shales are encountered during any part of construction.

G10. Silted water is not to be pumped directly into the watercourse. Any water discharged into the watercourse is not to exceed a suspended solids concentration of 50 mg/1 on a grab sample or 25 mg/1 on monthly arithmetic mean nor turbidity concentration of 15 NTU above upstream levels.

G11. Unless otherwise noted in writing by the Nova Scotia Department of the Environment, all construction site runoff shall be adequately treated to prevent siltation of watercourses.

G12. Any upslope sheet runoff or overland flow drainage is to be temporarily diverted away from the construction site. Care is to be taken not to create other drainage problems by this diversion.

G13. Culverts and erosion control devices are to be installed prior to grubbing and filling of approaches.

G14. Flow checks, sediment traps or filters are to be constructed and maintained in roadside ditches prior to grubbing.

G15. Disperse runoff through natural vegetation or through erosion and sediment control devices upon leaving the construction site before it reaches the watercourse.

G16. Provide settling ponds of suitable size to reduce runoff velocity and to retain runoff long enough to assist in the precipitation of solids. A minimum requirement is that 1/16 acre-ft. of storage be provided for every acre of exposed construction area. Settling ponds are to be cleaned out when they are half full of sediment.

G17. Where ditches are required for culvert construction, they are to be stabilized following erosion control measures as set out in the Nova Scotia Department of the Environment's "Erosion and Sedimentation Control Handbook for Construction Sites".

G18. A buffer strip of undisturbed vegetation at least 30 metres (100 feet) wide is to be maintained between the watercourse and construction activity until stream crossing construction is complete. For information on actual water crossings, refer to the applicable specifications.

G19. Excavation spoils are to be stabilized, immediately upon placement, following measures as shown in the Nova Scotia Department of the Environment's "Erosion and Sedimentation Control Handbook for Construction Sites". At no time are excavation wastes or spoils to be deposited in or on a floodplain.

G20. Road drainage must not be discharged over a steep cut or fill unless appropriate erosion control measures are in place on the embankment and at the toe. Appropriate measures may include an apron, a diversion dyke, and a discharge pipe extending all the way to the bottom of the embankment.

G21. Stabilize all potential erosion sites by covering slopes with grass seed, hay or straw mulching as work progresses (not at the end of the project).

G22. Rock and similar erosion control works are to be constructed of clean, non-erodible, non-ore-bearing and non-toxic materials.

Nova Scotia

Department of the Environment

NOVA SCOTIA WATERCOURSE ALTERATION SPECIFICATIONS (1997)

Bank Stabilization

BS1. All work operations are to be conducted in a manner to cause a minimum of siltation and disturbance to the adjacent and downstream areas.

BS2. Banks are to be graded to a slope not exceeding 2:1 (horizontal:vertical).

BS3. The material used for bank stabilization works is not to come from the bed of the watercourse and must be clean, durable, non-ore-bearing and non-toxic.

BS4. Filter fabric or filter material is to be used when necessary beneath or filter material can be incorporated with the riprap to prevent erosion of fine bank material. Geotextile or filter fabric liners may be required for soils comprised of clay.

BS5. The following uniformly-graded, stone riprap material shall be used as armour for bank stabilization unless alternate materials have been approved by the Nova Scotia Department of the Environment.

Class 1	
Local velocity up to 10 feet per second.	At least 70% of the riprap material shall be between 200mm and 450mm (8 inch - 18 inch).
Class 2	
Local velocity up to 13 feet per second.	At least 70% of the riprap material shall be between 300mm and 760mm (12 inch - 30 inch).
Class 3	
Local velocity up to 15 feet per second.	At least 70% of the riprap material shall be between 500mm and 1200mm (20 inch - 48 inch).

BS6. Riprap must be placed by an excavator, backhoe, or by hand and carefully fitted along the streambank to prevent scouring and bank failure. All machine work is to be carried out from the watercourse banks unless otherwise stipulated by the Department. No equipment shall be permitted in the watercourse.

BS7. Riprap is to be installed to minimum thickness of 1.5 times the maximum stone size [minimum thickness 300mm (12 inches)].

BS8. If riprap is to be placed on the stream bottom, a minimum thickness of 3.0 times the maximum stone size is required [minimum thickness 600mm (24 inches)].

BS9. Bank stabilization works are to be designed to withstand water forces from buoyancy, high velocity, wave action and ice movement.

BS10. Vegetation is to be established on surrounding areas not covered by riprap.

Nova Scotia

Department of the Environment

NOVA SCOTIA WATERCOURSE ALTERATION SPECIFICATIONS (1997)

Beach Enhancement

BE1. All work operations are to be conducted in a manner to cause a minimum of siltation and disturbance to the adjacent and downstream areas. The use of a silt screen (silt curtain) may be required.

BE2. An approval for beach enhancement structures must be obtained from the Department of Natural Resources prior to any beach enhancement work.

BE3. Beach enhancement work may not exceed 7.6 metres (25 feet) along the shoreline.

BE4. Rocks and boulders that are not embedded are to be removed manually. Specific authorization for the removal of rocks and boulders from a watercourse will be contained in the Water Approval.

BE5. Machinery is not permitted to enter the watercourse.

BE6. Excavation of material from the watercourse is not permitted.

BE7. Sand is not permitted to enter the watercourse. Any areas to be covered with sand are to be above the high water mark.

BE8. Only a thin layer of gravel that is clean, non-ore-bearing and non-toxic to aquatic life is permitted to be placed in the area of the beach enhancement.

BE9. Any areas that are exposed, as a result of beach enhancement, are to be stabilized as soon as the work is complete.

Nova Scotia

Department of the Environment

NOVA SCOTIA WATERCOURSE ALTERATION SPECIFICATIONS (1997)

Bridges

The following applies to bridge construction or maintenance**:**

B1. All work operations are to be conducted in a manner to cause a minimum of siltation and disturbance to the adjacent and downstream areas.

B2. Grubbing is to be limited on streambanks to the area required for the construction of abutments and for adjacent backfills to reach slope stability.

B3. Excavations are to be conducted in such a manner as to keep the work area separated from the flowing stream.

B4. Cofferdams are to be used to separate the entire work area from the flowing stream. Cofferdams are to be constructed of sandbags faced with plastic, sheet piling or material specified in the Water Approval. Earth fill, which causes siltation during removal, is not to be used.

B5. Excavation of the bed or banks of a watercourse outside the cofferdam limits is not permitted.

B6. Cofferdams are to have sufficient freeboard.

B7. No excavation is to take place inside the cofferdam until the cofferdam is completely closed.

B8. Unless previously approved, not more than 1/3 of the stream width is to be blocked at any one time during construction.

B9. Care is to be taken during the placement and removal of cofferdams to minimize and prevent cofferdam material from washing into the stream.

B10. Protection is to be provided to assure that no fresh concrete, lime, or cement is allowed to enter a watercourse.

B11. Lumber treated with creosote is to be stored and air dried for a minimum of six months prior to use in or near the water.

B12. All machine work is to be carried out from the watercourse banks unless otherwise stipulated by the Nova Scotia Department of the Environment. The construction or maintenance of piers in watercourses will be subject to site specific terms and conditions of the Water Approval.

B13. Any silt laden water pumped from work areas within cofferdams, is to be directed to heavily vegetated areas, settling ponds or other treatment devices before it is allowed to re-enter any watercourse.

B14. The Nova Scotia Department of the Environment "Guidelines for the Application and Removal of Structural Steel Protective Coatings are to be adhered to during maintenance or construction activities.

Nova Scotia

Department of the Environment

NOVA SCOTIA WATERCOURSE ALTERATION SPECIFICATIONS (1997)

Culverts

The following applies to culvert construction or maintenance.

C1. The exemption under Section 5(1)(d) of the *Activities Designation Regulations* applies to the installation of a culvert during the period June 1 to September 30 only. Installation of a culvert outside this time frame will require formal approval and will require approval from the Department of Fisheries and Oceans. Installation of a culvert inside this time frame must be preceded with the submission of a Notification of Culvert Installation form at the designated Regional Office, Nova Scotia Department of the Environment.

C2. The exemption applies to a single culvert installation with the following maximum dimensions:

a) 1.8 metres (6 feet) in diameter in the case of a pipe culvert;
b) 3.0 metres (10 feet) in span in the case of an arch or open bottom box culvert;
c) 18.3 metres (60 feet) in length in all cases.

C3. Whenever possible, culverts shall be installed during periods of low flow. All work operations are to be conducted in a manner to cause a minimum of siltation and disturbance to the adjacent and downstream areas.

C4. The size of the culvert should be based on a minimum of 1:25 year estimated storm flows for forest roads and on a minimum of 1:100 year estimated storm flows for all other permanent installations.

C5. The culvert is to be aligned with the stream.

C6. Where fish passage is required, the maximum slope of the culvert is not to exceed 0.5%.

C7. The stream is not to be disturbed outside the area to be covered by the culvert and rock apron. Depending on the size of culvert, the bottom of the culvert should be set from 75 mm to 150 mm (3 inches to 6 inches) below the stream bed. The bottom of a 450 mm (18 inch) culvert should be about 75 mm (3 inches) below the stream bed and a 1200 mm (48 inch) culvert about 150 mm (6 inches) below the stream bed.

C8. If two or more culverts are to be set side by side, only one needs to be set below the stream bottom. The culverts are to be placed a minimum of one meter apart. The space between the culverts is to be adequately compacted to prevent washout.

C9. Culvert pipe should be set on a firm level bottom, preferably on a bed of gravel. If the stream channel contains rocks larger than 150 mm to 200 mm (6 to 8 inches) in diameter, the rocks are to be removed.

C10. The road fill at each end of a culvert must be adequately protected from erosion by applying rock or other non-erodible materials to the top of the road bank. All materials are to be placed on a good footing to prevent collapse.

C11. When more than one length of corrugated steel culvert is required the culverts are to be connected with couplings provided by the manufacturer.

C12. The stream bottom and banks at the outlet of culverts are to be protected from scour by the water that flows through the culvert. If rock is not naturally present, rock protection is to be placed on the stream banks and the stream bottom for a specified distance downstream of culverts. The rock is to be a minimum of 150mm (6 inches) in diameter and be placed at the culvert outlet for the distances indicated in the following table. The rock must be non-ore bearing and non-toxic to aquatic life.

Culvert Size-Length of Rock Protection

Culvert Size	Length of Rock Protection
450 mm (18 inch) dia.	2.1 m (7 feet)
600 mm (24 inch) dia.	2.7 m (9 feet)
760 mm (30 inch) dia.	3.3 m (11 feet)
900 mm (36 inch) dia.	4.0 m (13 feet)
1200 mm (48 inch) dia.	5.5 m (18 feet)

C13. All excavated material and construction debris shall be disposed of away from the stream so that rain or high flow conditions will not return the debris to the stream.

C14. Water control is to be accomplished using one of the following methods:

a) Installing the new culvert beside the watercourse and diverting the stream flow into the culvert following completion of the installation.
b) Diverting the watercourse, temporarily, through a diversionary channel.
c) Pumping the stream flow around the installation.

C15. Excavation of diversionary channels is to be carried out in the dry from the downstream end. Diversionary channels constructed in erodible or silt-forming materials are to be stabilized with protective rock, plastic sheeting, or other approved materials before any flow is diverted.

C16. The following uniformly-graded, stone-riprap material is to be used for embankment protection unless alternate materials have been approved by the Nova Scotia Department of the Environment.

Class 1	
Local velocity up to 200mm 3 m per second (10 feet per second)	At least 70% of the riprap shall be between and 450mm (8 inches and 18 inches).
Class 2	
Local velocity up to 300mm 4 m per second (13 feet per second)	At least 70% of the riprap shall be between and 760mm (12 inches and 30 inches).
Class 3	
Local velocity up to 500mm 4.5 m per second (15 feet per second)	At least 70% of the riprap shall be between and 1200mm (20 inches and 48 inches).

C17. Culverts are to be installed prior to grubbing.

C18. During construction, temporary access roads and working areas around the site must be adequately surfaced with clean gravel and maintained to prevent siltation of the watercourse.

Nova Scotia

Department of the Environment

NOVA SCOTIA WATERCOURSE ALTERATION SPECIFICATIONS (1997)

Dams

The following applies to dam construction or maintenance.

D1. All work operations are to be conducted in a manner to cause a minimum of siltation and disturbance to the adjacent and downstream areas.

D2. All dams require release of a maintenance flow or fish passage designed in accordance with the Department of Fisheries and Oceans, unless the applicant receives written permission, to construct the dam without a maintenance flow or fish passage, from the Department of Fisheries and Oceans.

D3. All dams greater than 1.5 metres (5 feet) in height are to be designed by a registered professional engineer.

D4. Any materials used in the construction of the dam are to be clean, non-ore-bearing and non-toxic to aquatic life. Protection is to be provided to assure that no excess fresh concrete, lime or cement is allowed to enter the watercourse.

D5. Where dams are constructed across a watercourse, fill material is not to be excavated from riparian (stream side) areas.

D6. For all dams not capable of being safely overtopped by flood water or wind generated waves, the minimum acceptable freeboard is 0.5 metre (1.6 feet).

D7. All dams not capable of being safely overtopped are to incorporate a spillway designed to pass the minimum flood discharge, as determined below unless it is demonstrated in writing by a registered professional engineer that lesser spillway capacity is adequate and no risk to human life is thereby created.

(i) freeboard less than one metre:
$Q = 6.93\ A^{0.75}$ (Q in m^3/s and A in km^2)
$Q = 500\ A^{0.75}$ (Q in cfs and A in mi^2)

(ii) freeboard greater than one metre:
$Q = 3.465\ A^{0.75}$ (Q in m^3/s and A in km^2)
$Q = 250\ A^{0.75}$ (Q in cfs and A in mi^2)

D8. Trees and slash are to be removed from the area to be flooded when creating an impoundment. Trees are to be cut 100mm (4 inches) from the ground and the stumps are to remain.

D9. Two-thirds of the prevailing flow is to be maintained during construction and filling.

D10. The continuous maintenance flow requirements specified in the Water Approval are to be maintained downstream of the dam.

Nova Scotia

Department of the Environment

NOVA SCOTIA WATERCOURSE ALTERATION SPECIFICATIONS (1997)

Diversion of a Watercourse:

DW1. All work operations are to be conducted in a manner to cause a minimum of siltation and disturbance to the adjacent and downstream areas.

DW2. The original channel is to be left untouched until the diversion channel has been completed and approved by the Nova Scotia Department of the Environment.

DW3. Excavation is to be carried out in the dry from the downstream end.

DW4. The ends of the original channel are to be closed off with non-porous and non-erodible materials once the diversion channel has been approved.

DW5. The diversion channel is to physically resemble the original channel in cross-section.

DW6. If a tributary stream enters the existing channel along the reach to be bypassed by the diversion channel, provision is to be made to connect the tributary to the diversion channel by an appropriately designed channel.

DW7. If the original channel will no longer be used, it is to be backfilled with non-porous and non-erodible material throughout the full length of the diverted reach, once flow has been established in the diversion channel.

DW8. The bottom of the new channel is to be deeper in the centre along the straight sections and on the outside banks in the meanders.

DW9. To prevent erosion, all diversion channels shall be stabilized by riprap, or in the case of temporary diversions, plastic lining may be used.

Nova Scotia

Department of the Environment

NOVA SCOTIA WATERCOURSE ALTERATION SPECIFICATIONS (1997)

Dredging:

DR1. All work operations are to be conducted in a manner to cause a minimum of siltation and disturbance to the adjacent and downstream areas. The use of a silt screen (silt curtain) may be required.

DR2. Dredging is generally not permitted except in cases where the dredge area is small and does not support fish habitat. Written permission from the Department of Fisheries and Oceans is required in all cases.

DR3. Dredged material is to be disposed of away from the watercourse in an area that will prevent re-entry of the material into the watercourse and in an area acceptable to the Nova Scotia Department of the Environment.

DR4. Machinery is not permitted to enter the watercourse.

DR5 The banks of the watercourse are to be satisfactorily rehabilitated if damaged during the dredging activity.

Nova Scotia

Department of the Environment

NOVA SCOTIA WATERCOURSE ALTERATION SPECIFICATIONS (1997)

Fords

F1. All work operations are to be conducted in a manner to cause a minimum of siltation and disturbance to the adjacent and downstream areas.

F2. Temporary fords are only permitted during the period June 1 to September 30 unless otherwise specified in the Water Approval.

F3. Temporary fords are to be located where the stream bottom is firm enough to carry the load and the majority of the stone material is in excess of 100mm (4 inches) in diameter.

F4. Any materials placed in the stream to improve the crossing site are to be clean, non-ore-bearing and non-toxic to aquatic life. A minimum water depth of 200mm (8 inches) at the crossing site is to be maintained where stream flows permit.

F5. Temporary fords are to be restricted to a single location and at right angles to the watercourse channel. The bed of the channel is not to be used for travel parallel to the banks of the watercourse.

F6.
a) The ford shall have a maximum width of 1.5 times the equipment width.
b) The stream bank approaches are to be lowered to at least 3 to 1 slope.
c) To prevent silt tracking, 75mm (3 inch stone), corduroy or brushmats are to be used to stabilize both approaches to the ford.
d) The banks and wheel impressions are to be permanently stabilized upon project completion.

F7. Equipment required to temporarily ford a watercourse is to be mechanically sound, having no leaking fuel tanks or hydraulic connections.

F8. Equipment activity within the wetted perimeter of the stream is to be kept to the absolute minimum.

F9. Parking of equipment in the watercourse is not permitted.

F10. If equipment becomes stuck within the watercourse or on its banks, the equipment is to be winched or pulled out. Shovelling and excessive spinning are not permitted.

Nova Scotia

Department of the Environment

NOVA SCOTIA WATERCOURSE ALTERATION SPECIFICATIONS (1997)

Pipelines

The following applies to pipeline or cable installation or maintenance under the bed of a watercourse.

P1. All work operations are to be conducted in a manner to cause a minimum of siltation and disturbance to the adjacent and downstream areas.

P2. During construction, streambanks are to be graded so that ground elevation gradually decreases from the top of the bank to the edge of the stream.

P3. No heavy equipment is to be used within 30 metres (100 feet) of a stream prior to grubbing. Within the area, large trees and shrubs must be cleared manually.

P4. Grubbing of the area within 30 metres (100 feet) of the stream is permitted only when actual stream crossing work is to begin.

P5. Grubbing may not be carried out beyond a 15 metre (50 feet) strip upstream and downstream of the crossing centreline (a total width of 30 metres). As the pipeline or cable work proceeds, all soil areas laid bare must be seeded and/or vegetated and the stream banks restored.

P6. Pipe installed in a trench in an unconsolidated bed is to be set two metres (6.5 feet) below the stream bed grade. If solid rock is encountered, which requires blasting, the pipe may be set at 1 metre (3.25 feet) below the stream grade. Exceptions to this will be specified in the Terms and Conditions of the Water Approval.

P7. Any surplus material excavated from the stream bed or banks during trenching operations must be disposed of away from the stream.

P8. Where rock was removed, gravel fill or clean, non ore-bearing and non-toxic quarried rock material is to be used as protective material to be placed on top of the filled trench to prevent any possible erosion of materials beneath.

P9. In wide stream crossings the pipe must be ballasted to prevent it from floating.

P10. Appropriate environmental mitigation measures may vary in accordance with the trenching techniques employed and therefore crossings may be reviewed by regulatory and advisory agencies on a specific technique or case basis. Methods and detailed drawings will be required.

P11. Where a major pipeline crosses a watercourse on supports or piers built especially to carry it, the Watercourse Alteration Specifications for bridges will also apply.

P12. A plan depicting erosion and sediment control methods will be required.

P13. Streambanks at pipeline or cable crossings shall be rehabilitated and stabilized with riprap, geotextile or vegetation, or combination thereof, as soon as excavations are backfilled.

Nova Scotia

Department of the Environment

NOVA SCOTIA WATERCOURSE ALTERATION SPECIFICATIONS (1997)

Ponds

Po1. Instream ponds are not permitted unless the watercourse is relatively small and does not support fish habitat. Specifications for the installation of instream ponds will be indicated in the Water Approval and are subject to approval from the Department of Fisheries and Oceans.

Po2. All work operations are to be conducted in a manner to cause a minimum of siltation and disturbance to the adjacent and downstream areas.

Po3. The minimum distance from the pond to the watercourse is to be 15 metres (50 feet) unless approved by an Administrator.

Po4. The site of the pond is to be chosen such that the natural drainage to the pond does not include known sources of pollution.

Po5. The maximum size of the inlet and outlet pipes is 250mm (ten inches).

Po6. The maximum water diversion from the watercourse is not permitted to exceed 1/3 of the low flow for the site as computed by the formula:

Q = 0.05 cubic feet per second per square mile x A
where;
Q = the water withdrawal rate in cubic feet per second and
A = the catchment area of the watercourse in square miles.

Po7. The inlet and outlet pipes of the pond are to be screened as follows:

i) inlet pipe - screened on stream side with maximum inside screen mesh opening of ten millimetres. An outside screen of large mesh or a trash rack must protect the inner screen.
ii) outlet pipe - screened on pond side.

Po8. The ends of the pipes must be protected from the action of the stream by carefully placing large stone riprap along the bank around the ends of the pipes but not protruding into the watercourse.

Po9. Trees and brush are to be removed and disposed of away from the site of the proposed pond.

Nova Scotia
Department of the Environment

NOVA SCOTIA WATERCOURSE ALTERATION SPECIFICATIONS (1997)

Wharves

W1. An Approval for the construction of all wharves must be obtained from the Department of Natural Resources prior to any construction.

W2. All work operations are to be conducted in a manner to cause a minimum of siltation and disturbance to the adjacent and downstream areas.

W3. The maximum length of the wharf is not to exceed 15 metres (50 feet).

W4. Wharves are to be built on cribs or poles, or a crib or poles may be used to anchor a floating dock.

W5. For wharves built on 2 or more cribs, the first crib is to be located a minimum of 3 metres (10 feet) from shore, or extend into a lake or river below the ordinary high water mark to allow for near shore circulation.

W6. Each crib is not to exceed 3.6 metres (12 feet) in length and subsequent spans are to be a minimum of 3 metres (10 feet) in length.

W7. For wharves built on poles, a minimum distance of 1.2 metres (4 feet) is to be maintained between poles.

W8. If a single crib or gabion is used to anchor a floating dock, the crib or gabion is to be placed at the shore line and extend into the water a maximum horizontal distance of 2 metres (6 feet).

W9. Wharves shall not obstruct navigation or the flow of water.

W10. Lumber treated with creosote is to be stored and air dried for a minimum of six months prior to use in or near the water.

Guidelines for the Application and Removal of Structural Steel Protective Coatings

Nova Scotia

Department of the Environment

Issued: September 20, 1995
Revised: May 27, 1997

Nova Scotia Department of the Environment

GUIDELINES FOR THE APPLICATION AND REMOVAL OF STRUCTURAL STEEL PROTECTIVE COATINGS

Environment Act, Part I

I. PURPOSE

These guidelines are intended to provide guidance to individuals involved in the application and removal of structural steel protective coatings with respect to the minimum acceptable control measures and the appropriate testing and disposal procedures for the generated solid waste. This guideline replaces an interim guideline issued in May 1993.

II. LEGISLATION

Section 8(2)(b) of the Environment Act, S.N.S. 1994-95, reads as follows:

Duties of Minister 8 (2)

The Minister, for the purposes of the administration and enforcement of this Act, and after engaging in such public review as the Minister considers appropriate, shall

(b) establish and administer policies, programs, standards, guidelines, objectives, codes of practice, directives and approval processes pertaining to the protection and stewardship of the environment.

III. (1) SITE SPECIFIC REQUIREMENTS FOR ENVIRONMENTAL PROTECTION

The level of protection required for any structural steel coating application or removal operation is based on the site classification as listed in subsection (2), the nature of the activity (manual or blast and spray), and whether or not the coatings contain lead.

(2) SITE CLASSIFICATION:

Class A. No residence or permanent watercourse within 200 m.

Class B. A residence or permanent watercourse located between 100 m and 200 m.

Class C. A residence or permanent watercourse located within 100 m.

Class D. Public institution, potable water supply, outdoor public recreational area, or sensitive processing/treatment facility within 300 m.

(3) LEVELS OF PROTECTION

The levels of protection are listed below and tables identifying which level is appropriate for each scenario are listed in Schedule "A". Worker safety should be given top priority when designating enclosure systems.

Levels of Protection:

Level 1. No Enclosure

Level 2. Partial Enclosure

2A Ground sheets, or trays or tarpaulins hung beneath staging to collect debris for removal.

2B Vertically hung tarps or impermeable sheeting on exposed sides as needed to direct debris onto ground sheets, tarpaulins beneath the staging, or onto platforms where it can be collected and removed. The vertical tarps must, as a minimum, extend upwards to the elevation being worked. The tarps must have interlocking seams or be laced together, at a minimum of once every 1.0 m.

Level 3. Full Enclosure

Vertically hung tarps or impermeable sheeting on all sides, overhead cover and ground sheets or rigid platform. The tarps must have interlocking seams or be laced together, at a minimum of every 0.5 m. to reduce emission of dust to acceptable levels. Debris is directed onto ground sheets or rigid platforms for collection and removal.

Revised May 27, 1997

Level 4. Full Enclosure with Negative Pressure

Impermeable walls, overhead cover, rigid platform. Entire enclosure to have fully sealed joints and sealed entryways. Negative air pressure by forced air flow utilizing dust collectors. Uncontrolled dust and debris is prevented from leaving the enclosure and must be collected and removed.

IV. MANAGEMENT OF THE SPENT ABRASIVE BLASTING MEDIUM GENERATED ON THE PROJECT SITE

(1) Collection and Storage of Debris

(a) All debris collected on ground sheets, in trays or on platforms is to be removed daily and deposited in containers closed to the weather in a storage area.

(b) Debris is not to be removed from the storage area until it is tested.

(2) Sampling of Debris

(a) Obtain a minimum of 5 core samples of approximately equal increments selected at random from the stock piles or containers of debris.

(b) Combine one-half of each core sample to form a field sample with a mass equal or greater than 500 g.

(c) Divide this composite sample in two, retaining one-half for re-testing if required.

(d) Retain individual core samples for more selective retesting of debris if required.

(e) No special sampling tubes are required, however, the sampled material must be drawn from various levels of the stored material to give a reasonable estimate of the characteristics of the debris.

(f) For maintenance operations where the surface area to be prepared is large and storage facilities for the collected debris are limited, sampling may be done for every 5000 ft^2 of surface prepared. Testing and disposal for each batch of material sampled must be carried out in accordance with paragraph (3).

(3) Testing and Disposal of Debris

(a) The spent structural steel blasting medium must be stored and disposed of according to its classification as defined by the leachate test criteria in the Canadian General Standards Board (CGSB) provisional standard No. 164-GP-IMP. See Schedule "B" for a list of contaminants and allowable leachate concentrations. Testing for additional contaminants may be required by the Regional Manager.

(b) The solid waste classifications are described below:

(i) Solid Waste

The spent structural steel blasting medium is not classified as waste dangerous goods if leachate produced does not contain any of the contaminants listed in Schedule "B" at a concentration higher than that specified in Schedule "B". The spent blasting medium shall be transported from the project site to an approved waste disposal site.

(ii) Waste Dangerous Goods

The spent structural steel blasting medium is classified as waste dangerous goods if it produces a leachate containing any of the contaminants listed in Schedule "B" at a concentration in excess of that specified in Schedule "B". The contractor or agency shall obtain agreement and approval from the Nova Scotia Department of the Environment for treatment and/or disposal of the spent blasting medium.

(c) The interprovincial transportation of waste dangerous goods must be carried out in compliance with the Federal Transportation of Dangerous Goods Act.

(d) Waste dangerous goods shall be stored under cover in a secure area (fenced) until proper disposal arrangements are made.

DATED; the day of , 1996.

Peter Underwood
Deputy Minister of Environment

SCHEDULE "A"
MINIMUM ENCLOSURE REQUIREMENTS FOR
APPLICATION AND REMOVAL OF PROTECTIVE COATINGS

TABLE 1 - LEAD FREE PAINTS

COATING OPERATION	SITE CLASSIFICATION*			
	A	B	C	D
MANUAL CLEANING	1	2A	2B	2B
MANUAL PAINTING (brush, roller)	1	2A	2A	2A
BLAST CLEANING and/or SPRAY PAINTING	1	3	3	3

TABLE 2 - LEAD PAINTS

COATING OPERATION	SITE CLASSIFICATION*			
	A	B	C	D
MANUAL CLEANING	2A	2B	2B	2B
MANUAL PAINTING (brush, roller)	1	2A	2A	2A
BLAST CLEANING and/or SPRAY PAINTING	2B	3	3	SITE ASSESSMENT BY DOE

SITE CLASSIFICATION: A. NO RESIDENCE OR PERMANENT WATERCOURSE WITHIN 200m.
B. RESIDENCE 0R PERMANENT WATERCOURSE >100m, <200m.
C. RESIDENCE OR PERMANENT WATERCOURSE <100m.
D. PUBLIC INSTITUTION OR POTABLE WATER SUPPLY, OUTDOOR PUBLIC RECREATIONAL AREA OR SENSITIVE PROCESSING/ TREATMENT FACILITY <300m.

* Note: Department inspectors may require a higher level of enclosure than listed in the above tables for protection of sensitive areas.

SCHEDULE "B"

LEACHATE QUALITY CRITERIA

CONTAMINANT	CONCENTRATION (milligrams per litre)
Barium	100
Cadmium	0.5
Chromium	5
Lead	5

Pit and Quarry Requirements

The Contractor is advised that all work on this contract must conform to the Nova Scotia Department of Environment (DE) *Pit & Quarry Guidelines (Revised May 1999)* as contained in Appendix "B" of the Standard Specification. The Contractor must adhere to the following specific requirements with respect to environmental and occupational health and safety issues related to aggregate operations and pit and quarry rehabilitation.

1. Aggregate Operations:

The Contractor shall comply with the ***Nova Scotia Occupational Safety General Regulations, Sections 174 to 189*** with respect to the operation of pits and quarries (Surface Mine Workings).

Prior to the commencement of any work in a pit or quarry, the Contractor shall provide the Engineer with a copy of all environmental approvals for existing aggregate operations as well as a copy of the notification letter (at least two (2) weeks before the aggregate operations are to begin or resume) to the Department of Labour and Workforce Development Director of Occupational Health and Safety ***and to the Department of Transportation and Infrastructure Renewal's Project Engineer***, describing the Contractor's intention to begin or resume operations in the pit or quarry.

2. Rehabilitation:

When aggregate requirements under this Contract have been fulfilled, it is the Contractor's responsibility to properly abandon and rehabilitate pits and quarries as follows:

(1) Access points to pits and quarries shall be removed to prevent vehicular entry.

(2) Depressions that hold water shall be re-graded such that the maximum depth of standing water is one (1) metre. If this requirement is not achievable, two egress points from the location(s) involved shall be provided.

(3) All areas (in material other than solid rock) shall be re-graded to a minimum 2:1 (horizontal:vertical) inclination.

(4) The working face of pits and quarries (solid rock) shall be re-graded to a minimum 1:1 inclination. If there is standing water that is greater than one (1) metre in depth adjacent to the working face, the working face shall be re-graded to 1.5:1.

(5) Exposed overburden shall be re-vegetated. At project completion, re-vegetated areas shall consist of 80 % (percent) turf cover. At the Engineer's discretion, the 80% turf cover requirement may be waived, provided that hydro-seeding has been carried out in accordance with Division 7, Section 5 of the Standard Specification.

(6) Where there is potential for erosion of channels/ditches (including access roads ditches) leading from the pit or quarry to a watercourse, channels/ditches shall be lined with Clear Stone C1, in accordance with Division 3, Section 4 of the Standard Specification.

(7) Stockpiles of aggregate must be removed or leveled off, unless the Contractor has provided the Engineer with written confirmation that the one or both of the following conditions have been met:

(a) The pit or quarry landowner has obtained ***approval under Part V of the Nova Scotia Environment Act*** to continue operations in the pit or quarry.

Landowners are required to submit completed applications to DE. All aspects of the application must be complete, including scale drawings showing the area that will be disturbed, nearby residences, property boundaries, watercourses, wells, etc. Applications shall be accompanied by the appropriate security as well as letters of permission from adjacent property owners and details of pre-blast surveys and blast design work that has been carried out. ***DE will not accept applications for sites that exceed four (4) hectares in area (i.e. such sites are required to be registered as an undertaking under the Environmental Assessment process).***

A letter issued by DE accompanied by verification of appropriate security (held by DE), indicating that the application has been received, shall be considered acceptable proof that the permitting process has been initiated.

(b) The remaining aggregate from that site will be used ***(on a Department of Transportation and Infrastructure Renewal project) within a period of 60 days following completion of work on the original Contract for which the aggregate source was manufactured.***

3. <u>Associated Costs for Rehabilitation</u>:

All costs associated with aggregate operations as well as pit and quarry rehabilitation shall be borne by the Contractor. If the Contractor has failed to comply with the requirements described in **2. Rehabilitation**, the Engineer will have the rehabilitation remedied and the Department will retain appropriate funds ($10,000 per hectare) for rehabilitation as herein described from the sum due to the Contractor from the Minister for accepted work on this Contract.

1.0 80-20 RULE

The following is the practice to be adhered to by all Contractors working on Department Contracts and shall apply to materials, as noted in the following, hauled after 12:00 noon, local time, on the date of the Letting.

1.1 Hiring of Local Trucks.

The 80-20 rule shall apply to the hiring of local trucks for Department operations. At least 80% of the trucks hired on NSTIR Contracts shall be private trucks hired, on a rotational basis, through the local branch of the Truckers Association of Nova Scotia, so that all trucks in the area receive a relatively equal amount of work. This is referred to as the 80-20 rule. The Contractor shall make every reasonable effort to balance the interests of the private trucks hired with the Contractor's requirement to accomplish the Work in an efficient and cost effective manner.

1.2 Dispute Resolution.

In matters of disagreement between the Trucking Industry and the Contractor, the Engineer is empowered to adjudicate the dispute. The complaint shall be put in writing and presented to the Engineer by the Local President of the Truckers Association or the Contractor. The Engineer shall investigate the complaint and within 20 days shall present a resolution of the problem. This resolution shall not be limited in scope and shall be focused on ensuring the spirit of the Contract with respect to the hiring and payment of local truck within specified area is upheld.

1.3 Hauling of Granular Materials and Asphalt Concrete.

The 80-20 rule applies to hauling of all granular materials (including rock fill and loose laid rip rap) and asphalt concrete from a pit, crusher or asphalt plant for a Department Contract. Department Truck Rates to apply.

1.4 Hauling Materials To Produce Granular Materials.

The 80-20 rule applies to the hauling of all material which is to be used to produce granular material including stone chips (with exception of material to be used to produce asphalt concrete). Department Truck Rates apply.

1.5 Hauling of Stone Chips for Seals.

The 80-20 rule applies to the hauling of stone chips for seals from the site where the stone chips are manufactured to a stockpile location on or near the Contract and also from the stockpile on or near the Contract to the spreader. Department Truck Rates apply.

1.6 Hauling of Aggregates for Micro Surfacing.

The 80-20 rule applies to the hauling of aggregate for Micro Surfacing from the site where the aggregate is manufactured to a stockpile location on or near the Contract. Department Truck Rates apply.

1.7 Hauling of Excavation or Borrow Material.

- **Section of Road Not Designated.** The 80-20 rule applies to the hauling of excavation and/or borrow material on a Contract where the section of road under Contract is not designated. Department Truck Rates apply.

- **Part or All of Section of Road Designated.** The 80-20 rule applies to the hauling of excavation and/or borrow material over a non-designated section of highway for a Contract where all or a portion of the section of road under Contract is designated. Department Truck Rates apply.

1.8 Hauling of Common and/or Borrow Material.

The 80-20 rule does not apply to hauling of common and/or borrow material for a Contract where the section of road under contract is designated, and the movement of material is confined to the designated limits. Department Truck Rates do not apply.

1.9 Hauling of Blend Sand.

The 80-20 rule does not apply to the hauling of material (including blend sand) to be processed into asphalt concrete. Department Truck Rates do not apply.

1.10 One Truck Only.

If only one truck is required on a Contract the Contractor may use a truck of their own choice. However, to comply with the 80-20 rule, before the Contractor could use another truck of their choice they would have to have a minimum of 8 private trucks employed on the Contract provided, of course, if private trucks were available. Under normal circumstances, upon start up, the Contractor would be expected to provide their own truck first followed by 8 private trucks, before providing another of their own trucks.

1.11 General.

Granular material is deemed to include all classes of gravel, Special Gravel, Gravel Borrow, Rock Fill, Loose Laid Rip Rap and Fill Against Structure material.

Where Department rates apply, rates paid to all owners of trucks in the employ of the Contractor, Sub-contractor, or of any person doing or contemplating doing, the whole or any part of The Work contemplated by the Contractor, shall be at least equal to the rates of pay fixed by the Minister from time to time. It should be noted, however, that the rate to be used when hauling items for which the Contractor is paid on a per tonne basis shall be the tonne-km rate unless otherwise stated in the Special Provisions. The utilization of Tonne Kilometre Rates and/or Hourly Rates shall be mutually agreed upon between the Contractor and the TANS representative at the pre-construction meeting.

The rates paid to all labourers or other persons in the employ of the Contractor, Sub-contractor, or of any person doing, the whole or any part of The Work for the Contractor shall be at least equal to the rates of pay that may be fixed by the Minister from time to time.

Workers shall not be required to work longer hours than those fixed by the custom of the trade in the district where The Work is carried on, except for the protection of life or property, or in case of other emergencies. In the event of a dispute arising as to wages, or what are the current hours fixed by the custom of the trade, it shall be determined by the Minister whose decision shall be final.

1.12 Removal of Asphalt from Overweight Trucks.

It shall be the joint responsibility of the paving Contractor and trucker to load the proper amount of asphalt concrete into each truck. Any excess amount that is removed shall be the joint responsibility of the paving Contractor and the trucker. The removal of the excess material shall be accomplished in an manner that is consistent with the Occupational Health & Safety Act and also shall not impact on the integrity, or promote segregation, of the hot mix asphalt.

2.0 OVERHAUL RATES

Haul, m	$ per m^3
300 - 599	0.50
600 - 899	0.61
900 - 1199	0.72
1200 - 1499	1.01
1500 - 1799	1.18
1800 - 3199	1.59
3200 - 4799	1.98
4800 - 6399	2.37
For each increment of 1600 m, the rate increases by $0.39 per m^3.	

3.0 GRAVEL IN STOCKPILE

The Contractor is advised that the current rate of $3.02 per tonne will apply to Gravel in Stockpile as referred to in Division 3 Sections 2, 3, and 4, and Division 4 Section 4.

4.0 PILOT VEHICLE

Circumstances may arise in certain signing procedures that warrant the use of a Pilot Vehicle by the Contractor. When the use of a Pilot Vehicle is approved by the Engineer, the rate to be paid for the Pilot Vehicle including the operator and all operating costs, will be $20.50 per hour.

5.0 COLD WEATHER CONCRETE

5.1 Special Protection. $4.84 per cubic metre of concrete placed.

5.2 Special Protection with Insulation. $24.40 per cubic metre of concrete placed.

5.3 Complete Housing with Heat. $49.60 per cubic metre of concrete placed.

6.0 TRUCK RATES

6.1 Cubic Metre Kilometre Rates

Km	$/Tonne	Km	$/Tonne	Km	$/Tonne	Km	$/Tonne
1	3.16	26	8.14	51	13.42	76	19.03
2	3.50	27	8.31	52	13.64	77	19.28
3	3.76	28	8.46	53	13.89	78	19.46
4	4.06	29	8.66	54	14.09	79	19.67
5	4.33	30	8.85	55	14.26	80	20.07
6	4.55	31	9.04	56	14.48	81	20.27
7	4.77	32	9.34	57	14.83	82	20.51
8	4.96	33	9.52	58	15.05	83	20.69
9	5.16	34	9.74	59	15.23	84	20.90
10	5.39	35	9.92	60	15.43	85	21.12
11	5.63	36	10.12	61	15.63	86	21.32
12	5.76	37	10.32	62	15.84	87	21.74
13	5.99	38	10.52	63	16.04	88	21.94
14	6.24	39	10.70	64	16.25	89	22.15
15	6.32	40	10.91	65	16.59	90	22.39
16	6.45	41	11.21	66	16.82	91	22.59
17	6.65	42	11.41	67	17.04	92	22.79
18	6.79	43	11.62	68	17.23	93	23.01
19	6.95	44	11.81	69	17.43	94	23.42
20	7.14	45	12.01	70	17.64	95	23.63
21	7.31	46	12.21	71	17.84	96	23.86
22	7.42	47	12.39	72	18.23	97	24.09
23	7.66	48	12.61	73	18.43	98	24.27
24	7.84	49	12.95	74	18.64	99	24.49
25	8.00	50	13.19	75	18.85	100	24.72

6.2 Tonne Kilometre Rates - Gravel

Km	$/Tonne	Km	$/Tonne	Km	$/Tonne	Km	$/Tonne
1	1.97	26	5.08	51	8.37	76	11.92
2	2.18	27	5.19	52	8.52	77	12.08
3	2.37	28	5.28	53	8.67	78	12.21
4	2.53	29	5.39	54	8.81	79	12.36
5	2.68	30	5.56	55	8.94	80	12.53
6	2.84	31	5.68	56	9.09	81	12.66
7	2.99	32	5.80	57	9.23	82	12.79
8	3.08	33	5.91	58	9.37	83	12.97
9	3.23	34	6.08	59	9.52	84	13.10
10	3.36	35	6.20	60	9.64	85	13.23
11	3.51	36	6.33	61	9.79	86	13.38
12	3.62	37	6.43	62	9.93	87	13.55
13	3.71	38	6.61	63	10.06	88	13.68
14	3.85	39	6.72	64	10.20	89	13.83
15	3.94	40	6.86	65	10.33	90	14.01
16	4.05	41	6.95	66	10.50	91	14.15
17	4.15	42	7.12	67	10.63	92	14.29
18	4.25	43	7.26	68	10.77	93	14.45
19	4.36	44	7.39	69	10.92	94	14.59
20	4.45	45	7.51	70	11.04	95	14.76
21	4.55	46	7.67	71	11.18	96	14.90
22	4.67	47	7.80	72	11.35	97	15.04
23	4.74	48	7.91	73	11.50	98	15.20
24	4.86	49	8.05	74	11.62	99	15.34
25	4.97	50	8.23	75	11.81	100	15.50

6.2 Tonne Kilometre Rates - Gravel - Continued

Km	$/Tonne	Km	$/Tonne	Km	$/Tonne	Km	$/Tonne
101	15.66	126	19.66	151	23.90	176	28.44
102	15.83	127	19.84	152	24.09	177	28.63
103	15.98	128	19.97	153	24.24	178	28.82
104	16.14	129	20.13	154	24.42	179	29.02
105	16.28	130	20.31	155	24.60	180	29.21
106	16.44	131	20.49	156	24.79	181	29.39
107	16.59	132	20.63	157	24.96	182	28.56
108	16.77	133	20.80	158	25.14	183	29.78
109	16.92	134	20.97	159	25.29	184	29.96
110	17.08	135	21.13	160	25.49	185	30.17
111	17.23	136	21.32	161	25.69	186	30.37
112	17.40	137	21.50	162	25.85	187	30.55
113	17.52	138	21.65	163	26.04	188	30.73
114	17.70	139	21.83	164	26.22	189	30.92
115	17.87	140	21.97	165	26.39	190	31.12
116	18.03	141	22.16	166	26.58	191	31.33
117	18.18	142	22.34	167	26.78	192	31.53
118	18.34	143	22.51	168	26.94	193	31.73
119	18.51	144	22.67	169	27.13	194	31.91
120	18.64	145	22.86	170	27.31	195	32.13
121	18.83	146	23.03	171	27.52	196	32.33
122	18.99	147	23.20	172	27.71	197	32.51
123	19.16	148	23.38	173	27.89	198	32.70
124	19.32	149	23.56	174	28.08	199	32.91
125	19.48	150	23.73	175	28.26	200	33.12

6.2 Tonne Kilometre Rates - Gravel - Continued

Km	$/Tonne	Km	$/Tonne	Km	$/Tonne	Km	$/Tonne
201	33.33	226	38.24	251	43.19	276	48.12
202	33.52	227	38.45	252	43.39	277	48.32
203	33.71	228	38.66	253	43.58	278	48.53
204	33.89	229	38.85	254	43.77	279	48.71
205	34.11	230	39.04	255	43.98	280	48.93
206	34.32	231	39.22	256	44.18	281	49.10
207	34.50	232	39.44	257	44.37	282	49.32
208	34.70	233	39.63	258	44.57	283	49.50
209	34.89	234	39.84	259	44.78	284	49.70
210	35.11	235	40.03	260	44.96	285	49.90
211	35.29	236	40.22	261	45.15	286	50.10
212	35.48	237	40.43	262	45.36	287	50.30
213	35.70	238	40.63	263	45.56	288	50.48
214	35.88	239	40.81	264	45.76	289	50.69
215	36.07	240	41.03	265	45.95	290	50.90
216	36.29	241	41.21	266	46.16	291	51.10
217	36.49	242	41.42	267	46.35	292	51.28
218	36.68	243	41.62	268	46.55	293	51.48
219	36.86	244	41.80	269	46.74	294	51.68
220	37.07	245	42.02	270	46.96	295	51.87
221	37.28	246	42.19	271	47.13	296	52.07
222	37.46	247	42.39	272	47.33	297	52.28
223	37.66	248	42.61	273	47.54	298	52.48
224	37.87	249	42.79	274	47.73	299	52.66
225	38.05	250	42.99	275	47.94	300	52.86

The rates will be increased by Ten (10%) Percent for specific rock hauling operations involving Loose Laid Rip-Rap, Armour Rock or Rock Fill. The hourly rate will only be increased by Ten (10%) Percent for trucks operating with full loads.

6.3 Tonne Kilometre Rates - Asphalt

Km	$/Tonne	Km	$/Tonne	Km	$/Tonne	Km	$/Tonne
1	3.60	26	6.86	51	10.37	76	14.11
2	3.83	27	6.98	52	10.54	77	14.24
3	4.00	28	7.15	53	10.70	78	14.38
4	4.18	29	7.26	54	10.84	79	14.56
5	4.35	30	7.40	55	11.00	80	14.72
6	4.51	31	7.53	56	11.13	81	14.86
7	4.64	32	7.68	57	11.27	82	15.00
8	4.74	33	7.81	58	11.40	83	15.18
9	4.88	34	7.92	59	11.57	84	15.32
10	4.99	35	8.04	60	11.71	85	15.47
11	5.11	36	8.23	61	11.85	86	15.64
12	5.23	37	8.33	62	12.01	87	15.82
13	5.33	38	8.49	63	12.16	88	15.96
14	5.43	39	8.60	64	12.28	89	16.11
15	5.56	40	8.75	65	12.44	90	16.27
16	5.66	41	8.88	66	12.61	91	16.42
17	5.77	42	9.04	67	12.74	92	16.58
18	5.88	43	9.15	68	12.90	93	16.73
19	5.99	44	9.33	69	13.04	94	16.90
20	6.11	45	9.47	70	13.20	95	17.07
21	6.22	46	9.59	71	13.34	96	17.22
22	6.33	47	9.73	72	13.49	97	17.37
23	6.45	48	9.88	73	13.65	98	17.53
24	6.60	49	10.03	74	13.81	99	17.69
25	6.72	50	10.19	75	13.93	100	17.88

6.3 Tonne Kilometre Rates - Asphalt - Continued

Km	$/Tonne	Km	$/Tonne	Km	$/Tonne	Km	$/Tonne
101	18.03	126	22.21	151	26.69	176	31.47
102	18.20	127	22.39	152	26.87	177	31.66
103	18.34	128	22.53	153	27.05	178	31.85
104	18.51	129	22.74	154	27.22	179	32.05
105	18.66	130	22.89	155	27.43	180	32.27
106	18.83	131	23.06	156	27.60	181	32.46
107	19.00	132	23.25	157	27.81	182	32.67
108	19.17	133	23.43	158	28.00	183	32.86
109	19.33	134	23.60	159	28.17	184	33.07
110	19.50	135	23.78	160	28.36	185	33.27
111	19.67	136	23.96	161	28.55	186	33.48
112	19.85	137	24.13	162	28.74	187	33.68
113	19.98	138	24.31	163	28.92	188	33.89
114	20.16	139	24.47	164	29.12	189	34.10
115	20.32	140	24.67	165	29.33	190	34.32
116	20.51	141	24.86	166	29.53	191	34.51
117	20.67	142	25.02	167	29.70	192	34.71
118	20.84	143	25.21	168	29.90	193	34.92
119	21.01	144	25.40	169	30.10	194	35.13
120	21.19	145	25.57	170	30.28	195	35.33
121	21.34	146	25.76	171	30.48	196	35.54
122	21.52	147	25.94	172	30.69	197	35.76
123	21.68	148	26.12	173	30.88	198	35.98
124	21.85	149	26.31	174	31.07	199	36.18
125	22.05	150	26.49	175	31.27	200	36.38

6.3 Tonne Kilometre Rates - Asphalt - Continued

Km	$/Tonne	Km	$/Tonne	Km	$/Tonne	Km	$/Tonne
201	36.60	226	42.02	251	47.41	276	52.78
202	36.83	227	42.23	252	47.61	277	53.01
203	37.04	228	42.43	253	47.84	278	53.22
204	37.27	229	42.65	254	48.04	279	53.43
205	37.47	230	42.85	255	48.26	280	53.66
206	37.68	231	43.10	256	48.49	281	53.87
207	37.91	232	43.29	257	48.69	282	54.09
208	38.11	233	43.52	258	48.93	283	54.30
209	38.33	234	43.73	259	49.11	284	54.51
210	38.55	235	43.94	260	49.34	285	54.74
211	38.77	236	44.17	261	49.58	286	54.93
212	39.00	237	44.37	262	49.77	287	55.18
213	39.19	238	44.60	263	50.01	288	55.38
214	39.41	239	44.81	264	50.20	289	55.59
215	39.62	240	45.01	265	50.42	290	55.83
216	39.85	241	45.25	266	50.62	291	56.01
217	40.08	242	45.45	267	50.86	292	56.26
218	40.27	243	45.68	268	51.06	293	56.45
219	40.49	244	45.90	269	51.28	294	56.67
220	40.70	245	46.09	270	51.51	295	56.89
221	40.94	246	46.33	271	51.70	296	57.09
222	41.15	247	46.52	272	51.94	297	57.34
223	41.35	248	46.76	273	52.14	298	57.54
224	41.57	249	46.97	274	52.36	299	57.77
225	41.78	250	47.16	275	52.58	300	57.96

6.4 Hourly Rate

For all truck/trailer configurations, registered to their maximum allowable weight, payment for all work compensated on an hourly basis shall be at a rate of $21.45 per axle per hour.

7.0 TRUCK RATES - SERVICE TRUCKS

7.1 Service Truck - Including Driver

This rate to be used when other rates do not apply, i.e. partial loads, intermittent use.

Truck one (1) tonne and under - $14.00 per hour
Trucks over one (1) tonne - Minimum hourly rate: $28.00 (3 cubic metres)

7.2 Service Truck - Without Driver

Truck one (1) tonne and under - $8.50 per hour

VALUE ENGINEERING ALTERNATE (VEA)

1.0 General

A **Value Engineering Alternate** (VEA) is an alternate design or modification(s) to a tendered design where a construction cost saving in excess of $50,000 can be achieved, without compromising the integrity and quality of the project. The Contractor has the option of submitting only one VEA for Preliminary Design Review, either with the bid or up to ten working days after the tender is awarded. The VEA will not be considered when awarding the tender. The VEA may be accepted or rejected by the Department at its sole discretion. The proposing of any design does not place the Department under any obligation to accept the design. Net construction savings will be shared equally between the Contractor and the Department. Minimum overall savings will be identified, confirmed and fixed prior to the Department giving approval to a VEA.

Changes which require different right-of-way limits or proposals involving work outside the scope of the tendered contract will not be considered as an acceptable VEA.

The VEA Review will be divided into three stages. Where a VEA is proposed, the Contractor has the option of submitting an informal Concept Submission, in which only a general description of the work is required. Should the Concept Submission be acceptable the Contractor will then submit a Preliminary Design, which requires a review by the Department to ensure it meets the requirements as specified. If the Preliminary Design review is satisfactory, the Contractor shall complete a Detailed Design as specified.

The Contractor shall be responsible for costs associated with reviewing and evaluating the VEA as follows:

- Concept Submission Review (optional) - There will be no cost associated with this step in the procedure.
- Preliminary Design Review - At the time that the preliminary design is submitted, the Contractor shall provide a certified cheque in the amount of $2,000.00.
- Detailed Design Review - At the detailed design review stage, the Contractor shall provide a certified cheque in the amount of $8,000.00.

The costs of the VEA, listed above, will be returned to the Contractor after final acceptance of their VEA. Should the VEA be disapproved, at any stage, all monies submitted will be retained by the Department.

The VEA proposal does not relieve the Contractor of any other contractual obligations.

2.0 Preliminary Design Review

To enable the Department to assess a VEA, the following minimum information shall be provided at the preliminary design review stage:

- Identification of the Contractor's Design Engineers including past project experience and resumes of designated individuals. The Design Engineer of Record must be registered in the Province of Nova Scotia and meet any acceptance criteria the Department may require depending on the nature of the VEA submitted.
- Identification of the Contractor's relevant experience including similar projects.
- Information specific to the VEA, in compliance with overall design criteria, in written and general arrangement drawing form, as follows:
    - Finished roadway elevations on, under and/or through the structure as applicable.
    - Span arrangements.
    - Foundation types.
    - Sections showing superstructure members including deck and curb type and number, type and size of girders.
    - Pier section showing pier type and details of pier foundation.
    - Abutment elevation sections showing abutment type and abutment foundation.
    - General description of construction erection procedure.
    - General description of bearings, deck joints and bridgerail proposed.
    - General description of wingwall type and geometry.
    - General description of materials to be used and finish treatments.
    - Design information to a level that displays a workable solution meeting project requirements.

- Realistic work schedule, including detail design and review stages, compliance with environmental restrictions and other regulatory agencies, and the effect on the project schedule completion dates.
- A detailed cost breakdown similar to the Department's tendered design including unchanged and modified items/prices from the tendered design and new items/prices pertaining to the VEA.
- Life cycle cost analysis for anticipated fifty year life span.

The VEA submission shall include a VEA cover page and VEA contents page as shown later in this document.

Submissions shall be complete, as described above, at the preliminary design review stage enabling the Department to conduct a full assessment for equivalencies, including, but not limited to:

- Functionality
- Serviceability
- Durability
- Maintainability
- Cost
- Aesthetics

If a submission is not complete it may be grounds for immediate rejection.

The Department and Contractor shall agree on the overall net savings as a result of the VEA and jointly sign a 'VEA Agreement', as shown later in this document, prior to approval being given.

Upon receiving the VEA or the award of the tender, whichever occurs last, the Department will require five (5) working days to complete the preliminary design review and inform the Contractor in writing whether the preliminary design has been approved or rejected. If approved the Contractor will submit a detailed design in a time frame commensurate with the level of complexity of the VEA. If rejected, the tendered design will be constructed as specified.

3.0 Detailed Design Review

The Contractor shall be responsible for completing the final detailed design. The design shall be prepared and stamped by a Professional Engineer, accepted under the Preliminary Design review and registered in the Province of Nova Scotia, and shall be complete in all respects, including all drawings and other information required to build the structure. Upon receiving the final complete set of design drawings, the Department will require (20) working days for reviewing the design and drawings. The Contractor may submit the final design drawings in two stages: a) one for the substructure and b) one for the superstructure in which case the Department will require ten (10) working days to review each submission but a minimum of twenty (20) working days in total. The submission for the substructure shall include the superstructure loads. The Department assumes no responsibility for the correctness or adequacy of the design as a result of this review.

The detailed design requirements are as follows:

- The design shall comply with the requirements of the current edition of CAN/CSA-S6. The requirements of this code may be supplemented with other design codes subject to the overall level of safety and loadings required by CAN/CSA-S6 being maintained and the approval of the Department.
- The minimum requirements of the roadway design drawings included with the tender shall be met including but not limited to; roadway alignment, clear roadway width, and environmental mitigation works. Any adjustment to the alignment including all associated works shall be at the Contractor's expense.
- Navigable Waters Protection Act (NWPA) approval for the tendered design will be the responsibility of the Department. Any additional NWPA approvals for the VEA will be the responsibility of the Contractor.
- All Department of Environment (DOE) and Department of Fisheries (DFO) approvals and permits for the tendered design will be the responsibility of the Department. Any additional DOE and DOF or other regulatory approvals and permits for the alternate will be the responsibility of the Contractor.
- Bridge wearing surface and bridge accessories (bridgerail, deck joints, deck and abutment drains, utility ducts, curbs, pier nose plates, etc.) shall be the same or equivalent to those of the tendered design.
- Only new materials shall be permanently used in the VEA.
- The Department's construction and maintenance standards shall be used except as modified and/or supplemented by the Specifications pertaining specifically to the VEA.

4.0 Other Requirements

The Contractor shall be responsible for making any adjustments or alterations at their own cost, for whatever cause, to his submission or design to make the option congruent with the specified requirements. Any portion of construction cannot commence until the design has been approved for that portion of the work.

The Department shall be responsible for contract administration services during construction. The Contractor shall make provision for the involvement of their Design Engineer as Engineer of Record as necessary. If the VEA involves inspection work which is unfamiliar or beyond the capabilities of the Department's staff and a specialist is required, all costs for the additional inspection will be the responsibility of the Contractor.

The cost of the work, as determined by the approved VEA, will be paid on the normal progress payment basis.

The Contractor's 50/50 share of the cost savings, as a result of the VEA and as agreed to prior to the VEA approval, will be paid as a lump sum separate item on the final progress payment.

The Department expressly reserves the right to adopt a VEA for general use in future projects administered by the Department when it determines the VEA is suitable for application to other projects without obligation or compensation of any kind to the Contractor.

VALUE ENGINEERING ALTERNATE (VEA)

Tender No:

Project No:

Project Description:

Nature of VEA:

Value Engineering Alternate Contents

Location
(page and/or plan no. or N/A)

1. Design Team
2. Contractor's relevant experience
3. Finished roadway elevations
4. Span arrangements
5. Foundation types
6. Structure section
7. Pier section
8. Abutment elevation sections
9. Construction erection procedure
10. Bearings, deck joints and bridgerail
11. Wingwall type and geometry
12. Materials used and finish treatments
13. Design calculations
14. Work schedule
15. Detailed cost breakdown
16. Life cycle cost analysis

Submitted by:

Value Engineering Alternate Agreement

I (we) on behalf of the Contractor:

submitting a VEA for the project described as:

Tender No:

Project No:

Project Description:

and I (we) on behalf of the Nova Scotia Department of Transportation and Infrastructure Renewal:

agree that, should the VEA be approved for construction, the construction cost savings of $ will be divided on a 50/50 basis between the Contractor and the Nova Scotia Department of Transportation and Infrastructure Renewal to be paid to the Contractor as a lump sum on the final progress payment.

Contractor:

Nova Scotia Department of Transportation and Infrastructure Renewal:

Witness:

Date:

GLOSSARY OF TERMS

Alkali Aggregate Reactivity (AAR): The reaction of cement alkalis with some forms of silica in fine or coarse aggregates causing disruptive expansion and cracking of concrete.

Anionic: A negatively charged ion in a solution; that portion of a compound which when dissolved (usually in water) tends to move toward the anode under the influence of a direct current.

Asphalt Emulsion: An emulsion of asphalt cement and water which contains a small amount of a surface active agent (emulsifier). Emulsified droplets of asphalt may be of either anionic (negative charge) or cationic (positive charge) type, depending on the surfactant used.

Asphalt Emulsion Prime: An application of a low viscosity asphalt emulsion to an absorbent surface or granular base, in preparation for an asphalt surface course.

Barrier Wall Railing: A railing that does not have to meet the barrier appraisal requirements of CAN/CSA S6, that is fastened to the top of a concrete barrier wall.

Base: Granular materials placed immediately below the pavement.

Bridge. A structure of a span of more than 3 m measured between the abutments and along the centre line of the roadway, and also including multiple spans where the individual spans are more than 3 m. The width of bridges is the distance between the inside faces of curbs (at the top of same) measured at right angles to the centre line of the roadway.

Cationic: A positively charged ion in a solution; that portion of a compound which when dissolved (usually in water) tends to move toward the cathode under the influence of a direct current.

Cementing Materials: (Portland Cement Concrete) A combination of Portland cement and supplementary cementing materials such as fly ash, blast furnace slag or silica fume.

Chipping Hammers: Electric or pneumatic (air operated) impact hammer tools available with a variety of striking points designed to remove brittle material. Chipping hammers shall not exceed 7 kg.

Cold Weather: Those conditions when the air temperature is at or below 5°C. It is also considered to exist when the air temperature is at or is likely to fall below 5°C within 24 hours after concrete placement. Temperature refers to shade temperature.

Concrete Deck Machine: A self-propelled mechanical screed machine on rails equipped with a rotating cylinder screed, an adjustable powered screw auger and a vibrator mounted in front of the screed. It shall have the ability or quality necessary for forward and reverse movement under positive control and the ability to raise the screed above the finished surface without adjusting the legs. The finishing machine shall be capable of obtaining an acceptable surface texture without excessive additional hand finishing.

Culverts: All waterway structures not defined as bridges and having a least dimension of opening of not less than 300 mm.

Curing: (Portland Cement Concrete) Process of maintaining adequate moisture in concrete for a period of time necessary to develop the desired properties of the concrete.

D-Cracking: (Portland Cement Concrete Pavement) A series of closely-spaced, fine, crescent shaped cracks in the concrete surface usually paralleling a joint or major crack and usually curving across slab corners. For ‘D’ cracks the crescent is concave in relation to the slab corners or joints.

Deck: That portion of the bridge which directly supports vehicle and pedestrian traffic and includes slab, curbs, gutters, sidewalks and parapets.

Dowel Bars: Smooth round steel bars placed across transverse joints usually at a spacing of 300 mm. These bars provide load transfer while permitting a joint to open and close.

EPWS: End Product Warranty Specification.

Flat and Elongated Particles: This characteristic is the percentage by mass of coarse aggregate that have a maximum to minimum dimension ratio greater than four.

Fly Ash: Finely divided residue that results from the combustion of pulverized coal.

Hot Weather: Those conditions when the air temperature is at or above 27°C. It is also considered to exist when the air temperature is at or is likely to rise above 27ºC within 24 hours. Temperature refers to shade temperature.

Isolation and Expansion Joints: Joints placed to allow movement of the pavement without damaging adjacent pavements, intersecting streets, drainage structures or other fixed objects.

Jack Hammers: Electric or pneumatic (air operated) impact hammer tools available with a variety of striking points designed to demolish or remove brittle material. Jack hammers shall be 14.0 kg maximum mass.

Layer (Reinforcing Steel): Two or more reinforcing bars placed in a plane parallel to a concrete face.

Load Transfer: (Portland Cement Concrete Pavements) Is the effective transfer of traffic loads from one side of the joint to the other. Load transfer across joints is developed either by aggregate interlock or by using dowel bars.

Longitudinal Joints: (Portland Cement Concrete Pavements) Joints parallel to the pavement centerline that control cracking.

Mat: (Reinforcing Steel) Transverse and longitudinal layers of reinforcing steel tied together.

Metal Traffic Barrier: A metal barrier system mounted on a structure that has undergone the barrier appraisal requirements of CAN/CSA S6 and has been accepted by the Engineer.

Non-Structural Concrete: Concrete that is non-reinforced, and used in components that are not designed to withstand heavy loads or that is used as fill material in excavations.

Parapet Wall Railing: A railing that does not have to meet the barrier appraisal requirements of CAN/CSA S6 that is fastened to the top of a parapet wall.

Portland Cement: The product obtained by pulverizing clinker consisting essentially of hydraulic calcium silicates to which calcium sulfate, limestone, water and processing additions may be added at the option of the Manufacturer.

Polymer: A large molecule made by the repetitive combination of a large number of simpler, identical units called monomers.

Railing: The term “railing”, referring to all types of railing, is used within this specification without specific reference to barrier wall railing, pedestrian railing, bicycle railing, parapet wall railing or metal traffic barrier railing.

Ready Mixed Concrete: Concrete that is completely batched at the plant and completely mixed in a truck at the plant, or while in transit.

Reclaimed Asphalt Pavement (RAP): An asphalt pavement that has been scarified and pulverized or crushed. No attempt is made to control gradation, except for maximum particle size. The resulting asphalt aggregate mix may be recycled.

Recycle: The reuse (usually after processing) of a material that has already served its first intended purpose.

Rehabilitation: Any modification, alteration or improvement to a structure or its components which is designed to correct defects or deficiencies.

Roller Compacted Concrete (RCC): RCC is a zero-slump concrete mixture that is mixed in a pug mill or stationary mixer, placed and roller compacted.

Silica Fume: Finely divided residue resulting from the production of silicon or silicon containing alloys.

Single Chip Seal: A wearing surface consisting of a uniform application of a rapid setting (RS or CRS) or medium setting (MS or CMS) or high float asphalt emulsion to a prepared surface followed by a uniform application of cover

aggregate, which is then rolled.

Slopes. The inclined graded areas extending from the shoulders to the natural undisturbed surface of the ground.

Stationary Mixer: A non-mobile mixer installed at a central mix plant for the purpose of mixing concrete.

Straight Edge: The straight edge shall be commercially fabricated metal for the intended purpose and be at least 3 m long. The straight edge shall be free from defects and kept straight and true at all times.

Subbase: Granular materials placed immediately below the base and above the subgrade.

Subgrade: That portion of the roadbed upon which the subbase (or base in the case where subbase granulars are not used) is to be placed.

Substructure: All that part of the structure below the bridge seats or below the springing line of arches. Back walls and parapets of abutments and wing walls shall be considered as part of the substructure.

Superstructure: All that part of the structure above the bridge seats or above the springing lines of arches, including the flooring, and not included in the substructure.

Surface Treatment: A chip seal applied to a prepared consolidated gravel, crushed stone, water bound macadam, stabilized soil or similar base.

Tack Coat: A spray application of asphalt emulsion to an existing asphalt or Portland Cement concrete surface prior to an asphalt overlay or patch to provide a bond between new and existing pavement layers.

Tie Bar: Deformed bar placed transverse to longitudinal joint to prevent individual slabs from separating.

Tining: Small grooves of specified dimension which are hand or machine made in the concrete surface in the transverse direction.

Transverse Construction Joints: (Asphalt Concrete Paving) Joints installed at the temporary end of a paving operation. Whenever possible, these joints should be installed at the location of a planned joint.

Transverse Contraction Joints: Joints that are constructed transverse to the centerline and spaced to control cracking from stresses caused by shrinkage, from moisture and thermal changes. Typically transverse contraction joints are oriented at right angles to the centerline and edge of the pavement lanes.

Unshrinkable Backfill: A mixture of aggregate, cement, water and fly ash (when desired) to create a controlled density, low strength, flowable material. Unshrinkable fill is self-consolidating and rigid setting and may be substituted for compacted gravel for backfill and structural fills.

WS: Warranty Specification.

Smoothness Testing & Remedial Measures
(Portland Cement Concrete)

1.0 **Profilograph Surface Test:** The smoothness of the finished surface of the pavement will be determined by using a Profilograph over each designated lane. The finished surface of the pavement shall be tested and corrected to a smoothness as specified or a price adjustment will apply. All corrections outlined in the following paragraphs shall be made by the contractor at their expense**.**

1.0.1 Profile Index:

The Profile Index for each lane is the cumulative profile reading, normally measured in the outer wheel path, reported in mm per 100 m section using a California type profilograph and a 5 mm blanking band.

2.0 **Equipment:** The smoothness profile, that is the Profile Index (PRI), will be determined using a California type profilograph. The profile is recorded full scale, vertically. The profilograph will be moved longitudinally along the pavement at a speed no greater than 5 km per hour to minimize bounce. The results of the profilograph test will be evaluated as outlined in the California Test 526 (as modified by NSTPW to metric units or as noted otherwise herein).

3.0 **Price Adjustment Schedule:** Price adjustments will be applied based on the square metres of the final pavement surface as outlined in Table 2 of this specification. The price adjustment may be omitted or modified from the requirements stated herein for various portions of the roadway as stated in the Special Provisions or as otherwise directed by the Engineer.

4.0 **Testing:** The profile will terminate 10 m from the end of each bridge deck, or from a joint between existing pavement and the new pavement. Pavement profiles will be taken at approximately the outer wheel path for every lane of traffic or as directed by the Engineer. Tapers will be excluded from testing unless otherwise directed by the Engineer.

4.0.1 Testing and Evaluation:

Profilograph testing will be scheduled to be completed within one day after completion of the pavement, whenever practicable. Generally, the outer wheel path for each lane (or as directed by the Engineer) will be tested in 100 m sections on the surface course using the Profilograph.

4.0.2 Retesting

Method Specification: The Contractor may request (once only) the retesting of 100 m section(s) and the Department will arrange for the retesting. If the retesting determines the PRI or “deviations” are equal to or greater than the original the Contractor will pay all costs associated with retesting. If the retesting determines the PRI or “deviations” are less than the original the Department will pay all costs associated with retesting.

End Product Specification: The Department may request (once only) the retesting of 100 m section(s) and the Contractor will arrange for the retesting. If the retesting determines the PRI or “deviations” are greater than the original the Contractor will pay all costs associated with retesting. If the retesting determines the PRI or “deviations” are equal to or less than the original the Department will pay all costs associated with retesting.

All profilograph graphical printouts (tapes) will be printed in duplicate and signed off (initialized) by the Project Engineer, or designate, at the time of testing. One printout shall be provided to the Project Engineer, or designate, at the time of testing.

5.0 **Corrective Action:**

5.0.1 “Deviations” Greater Than 8 mm in 7.6 m.

Within each 100 m section, all individual “deviations” greater than 8 mm in 7.6 m as measured by the Profilograph in the final surface may be corrected to reduce the “deviation” or the Contractor may elect to accept a penalty as per Table 1. The “deviations” are automatically labelled by the Profilograph.

5.0.2 Testing Corrections to ADeviations@ Greater Than 8 mm in 7.6 m.

On those sections where corrections are made, the pavement will be tested to determine the “deviations”. Any “deviations” greater than 8 mm in 7.6 m may be corrected to reduce the “deviation” or the Contractor may elect to accept a penalty as per Table 1.

TABLE 1 - “DEVIATIONS” GREATER THAN 8 mm in 7.6 m.

“DEVIATION”, mm	PRICE ADJUSTMENT
8 - 9	- $500
9.1 - 10	- $700
10.1 - 11	- $900
11.1 - 12	- $1100
12.1 - 13	- $1300
13.1 - 14	- $1550
14.1 - 15	- $1850
15.1 - 16	- $2200
16.1 - 17	- $2600
17.1 - 18	- $3050
EACH ADDITIONAL 1 mm INCREMENT ABOVE 18	NO. OF INCREMENTS x -$1000 + (-$3050)

5.0.3 Initial PRI Greater Than 12 mm per 100 m

Any 100 m section having an initial PRI greater than 12 mm per 100 m may be corrected to reduce the PRI or the Contractor may elect to accept an adjusted price as outlined in the Price Adjustment Schedule in Table 2

5.0.4 Testing Corrections to PRI

On those sections where corrections are made, the pavement will be tested to determine the final PRI. Any 100 m section still having a PRI greater than 12 mm per 100 m shall be subjected to price adjustments as outlined in Table 2

5.0.5 Corrections

All corrections shall be made at the Contractor's expense.

5.0.6 Retesting of Repairs

All retesting of repairs, shall be made with the same Profilograph used to perform the original testing, and shall be performed at the Contractor’s expense.

5.0.7 Portland Cement Concrete Pavement

Where corrections are required, they shall be made using an approved profiling device or by removing

and replacing the pavement as approved by the Engineer. Bush hammers or other impact devices will not be permitted.

Where corrections are made, the Contractor shall re-establish the surface texture to provide a uniform texture equal in roughness to the surrounding uncorrected pavement.

5.0.8 Time Limits for Corrective Work:

Corrections are to be done within ten (10) calendar days of completion of the paving/repaving or the penalties will be assessed as noted in Tables 1 and Table 2.

Repairs conducted after the contract completion date are subject to the requirements of the Late Completion Clause stipulated in the Contract Special Provisions.

5.0.9 Costs to be Borne by Contractor:

All costs associated with corrective actions and/or repairs shall be borne by the Contractor, including but not limited to, such items as cold milling, overlaying, removing and disposal, and replacing. The Contractor shall supply all plant, labour, equipment, materials, traffic control and incidentals required to complete the work to the satisfaction of the Engineer.

TABLE 2 - Price Adjustment Schedule

PROFILE INDEX PRI (MM/100M)	PRICE ADJUSTMENT, $ PER SQUARE METRE
#4.0	$0.338
4.1 - 5.5 incl.	$0.270
5.6 - 7.0	$0.203
7.1 - 8.5	$0.135
8.6 - 10.0	$0.068
10.1 - 12.0	$0.000
12.1 - 15.0	- $0.270
15.1 - 18.0	- $0.540
18.1 - 21.0	- $0.810
21.1 - 22.5	- $1.080
22.6 - 24.0	- $1.350
24.1 - 25.5	- $1.620
25.6 - 27.0	- $1.890
27.1 - 28.5	- $2.160
28.6 - 30.0	- $2.430
EACH ADDITIONAL 1.4 mm INCREMENT ABOVE 30.0	NO. OF INCREMENTS x -$1.270 +(-$2.430)

Safety Document Submission

Prior to commencement of construction and maintenance work, the contracted party (Contractor) is required to provide a Safety Document that meets the following requirements:

1. Safety Document Submission:

i. The Safety Document submission made by the Contractor applies to the construction and maintenance work of this specific project and related work sites. The Contractor shall submit **one (1) copy** of the Safety Document to the Department representative responsible for the administration of the Contract at least **three (3) working days** prior to the Pre-Job meeting. Work on the project shall not commence nor shall material be delivered on-site prior to submission of the Safety Document. Written approval to commence will be based on the acceptance of the Safety Document by the Department representative responsible for the administration of the Contract.

ii. Included in the Safety Document submission (under Heading #1 Certificate of Recognition) will be a copy of the company's Certificate of Recognition, issued jointly by the Workers' Compensation Board of Nova Scotia (WCB) and an occupational health and safety organization approved by the WCB, or a valid Letter of Good Standing from an occupational health and safety organization approved by TIR indicating that the Contractor is 'In the Process' of qualifying for the Certificate of Recognition.

iii. Where changes to the methods and procedures used in the execution of construction and maintenance work are required, the Safety Document must be modified. Provide a detailed description of your company's process for requesting a change(s) or modification(s). Any change and/or modification must be submitted in writing to the Department representative responsible for the administration of the Contract, and be agreed to in writing, prior to implementation of the changes.

2. Safety Document Organization: The Safety Document shall be submitted in the form of an instructional manual as follows:

i. Place in binders of commercial quality, accommodating 8½" x 11" paper size.

ii. Cover: Identify binder with typed or printed title "Project Safety Document" and note the title of project and the name of the contracted party submitting the document.

iii. Provide tabbed fly leaf for each separate heading, with typed heading on tab.

iv. Where drawings are within the safety document, provide with reinforced punched binder tab. Bind in with text. Fold in larger drawings to size of text pages.

v. Arrange content under Safety Document Headings specified in Section 3.

A Safety Document not meeting the format outlined above will be considered unacceptable and be returned to the Contractor.

3. Safety Document Headings:

i. Certificate of Recognition: Place, under this heading, a copy of the company's Certificate of Recognition showing the company is in Good Standing, or a copy of a valid Letter of Good Standing indicating the company is 'In the Process' or 'Audit Pending' for qualifying for the Certificate of Recognition.
   a) Company Safety Policy: Only required when 'In the Process' or 'Audit Pending'. Include information pertaining to the company's policy and commitment to Occupational Health and Safety, including the responsibilities of management, supervisors and workers.
   b) Company Safety Rules in General Terms: Only required when 'In the Process' or 'Audit Pending'. Include information of a general, global nature, applying to every work environment where the company has staff and pertaining to rules directing compliance to policy. For example, use of safety equipment and CSA approval on such items, use of alcohol or non-prescription drugs, reporting of injuries, etc.

ii. Hazard Assessment and Control: Place, under this heading, information identifying potential hazards specific to this project. For initial acceptance, the Contractor may submit a work type specific hazard assessment and control. Following the pre-job meeting, the Contractor **must** submit a site specific hazard assessment and control for each individual site (road/location) prior to commencement of work. Include control methodologies and copies of safe work practices and/or job procedures for critical tasks associated with the work type, and all material safety data sheets (MSDS) for major products associated with the work type. The Contractor must keep copies of all company safe work practices, job procedures and MSDSs, in a binder, on site at all times. Describe how supplementary information will be communicated with respect to any additional potential hazards that are identified during the execution of the work.

iii. Supervision: Place, under this heading, information on how the project will be supervised and how the project will be monitored for compliance with OHS requirements, including the activities of sub-contractors. Include the name(s) and responsibilities of the site supervisor(s) and their percentage of time spent on site.

iv. Employee Safety Training: Place, under this heading, documentation respecting the competence of employees who will be working on this specific project. Specifically:

a) Include assurance that all employees, supervisors and managers have met all of the specified skills and OHS training requirements necessary so as to be considered "competent" to perform their duties as defined by the Occupational Safety General Regulations. This should include sub-contractors.
b) Where the Occupational Safety General Regulations require "designated competent" persons to undertake certain duties (i.e., signalers, operating hoists and mobile equipment, rigging, operating grinders, welding/cutting/burning and soldering, electrical safety) include a signed list of all workers on site who are designated and what tasks they are designated to complete. This should include subcontractors.

v. Project - Joint Occupational Health & Safety Committee/Representative: Place, under this heading, the committee member's names when a JOHS Committee is deemed necessary under the OHS Act. Where a JOHS Committee is not required, name a safety representative, or representatives (one being an alternate), who is/are **not** connected with the management of the project.

vi. Emergency Action Plan: Place, under this heading, information detailing action to be taken in the event of various emergencies. Arrange content under the following sub-headings:

a) First Aid: Include the name(s) of the on-site First Aider(s), their level of training (e.g., Emergency or Standard) and an expiry date, as well as the size(s) and location(s) of the First Aid Station(s) on site.
b) Contact of Emergency Support Groups: Include relevant information including phone location for emergency use, the emergency telephone numbers and their location for the various organizations, such as (but not limited to) DEL, local hospital, EMO, NS Power, Municipal offices, which must be contacted in case of an emergency, and staff training in procedures. Listing 911 only is **not** acceptable.
c) Cessation of Work: Include relevant information respecting how work cessation during emergencies is handled and communicated to persons present on site.

1.0 DESCRIPTION

This specification applies to the final lift (surface course) of all newly placed asphalt concrete pavement where the following conditions are met:

i. The contract documents do not include a smoothness specification exemption for the section of roadway under contract.
ii. The contract contains one or more individual sections equal to or exceeding 500 metres in length.
iii. The contract includes at least two opportunities for the Contractor to improve smoothness; one of which is the surface asphalt lift with acceptable minimum thickness as defined in Section 2.4.
iv. The final lift (surface course) is placed between April 15th and December 31st.

If The Work consists of only one opportunity for the Contractor to improve smoothness (e.g. a single lift of asphalt concrete pavement over an existing asphalt surface), the specification shall be applicable only if the section of roadway has a pre-construction IRI value less than 3.00 mm/m (as measured by the Department or their representative), provided that conditions i, ii and iv, as stated above, have been met.

2.0 DEFINITIONS

2.1 Roadway Smoothness Category. In the contract documents, the smoothness category that applies for a particular section of roadway will be classified as either Category A, Category B or Category C. The category defined will apply to the entire section of roadway under contract. Roadway categories are determined solely at the Department's discretion based on several factors, including but not necessarily limited to: roadway classification, geometry, access points (intersections, driveways), and the presence of other physical features that may impact the ability to achieve pavement smoothness.

2.2 International Roughness Index (IRI). IRI is a statistical measurement used to determine the amount of roughness in a measured longitudinal profile. IRI shall be measured in mm/m and reported to two (2) decimal places for all procedures relating to this specification.

2.3 Pre-construction IRI. The pre-construction IRI refers to the overall average IRI for the section(s) of original roadway under contract. Pre-construction IRI measurements will be made by the Department or its designated representative prior to tendering.

2.4 Opportunities to Improve Pavement Smoothness. Opportunities for a Contractor to improve pavement smoothness shall include the following: a new lift of asphalt concrete pavement (with minimum thickness equal to or greater than 3 x the nominal aggregate size; exclusive of tolerances on EPS contracts), an asphalt concrete levelling course, cold planing, pulverization, gravelling, gravel or RAP inter-layer (sandwich), asphalt concrete recycling.

2.5 Reporting Interval. The reporting interval for this specification shall be 100 metres for overall IRI, and 10 metres for localized roughness.

2.6 Localized Roughness. Localized roughness is reported in 10 metre intervals where the IRI exceeds an established value as set out in Table 6.2 of this specification, for a particular roadway category.

2.7 Segment. A segment of Roadway shall be defined by the full lane width (including paved shoulders) over a defined length. The segment length shall be 10 metres for localized roughness. The segment length shall be 100 metres for overall IRI, however, shorter segment lengths may exist as outlined in Item 5.3.

2.8 Project Chainage. The distance as measured by the High Speed Profiler will be referenced to the contract stake chainage but will be the only chainage deemed accurate and acceptable for the smoothness specification.

3.0 REFERENCES

All reference standards shall be current issue or latest revision at the first date of Tender advertisement. This specification refers to the following standards, specifications or publications:

- ASTM E 950 Standard Test Method for Measuring the Longitudinal Profile of Traveled Surfaces with an Accelerometer Established Inertial Profiling Reference
- NSTPW Standard Specification - Highway Construction and Maintenance and latest revisions: Division 4,

Section 4
- NSTPW Standard Specification - Highway Construction and Maintenance and latest revisions: Division 4, Section 19
- TM HCS-007 – Method of Test for Calibrating, Correlating, and Conducting Surface Smoothness Measurements Using an Inertial Profiler

4.0 EQUIPMENT

A Class 1 inertial laser profiler will be used for all smoothness measurements under this specification as per Test Method HCS-007. The equipment will be installed and operated in accordance with the manufacturer's recommendations and ASTM E 950.

5.0 SMOOTHNESS TESTING PROCEDURES

The Department or its designated representative will conduct smoothness testing in accordance with ASTM E 950. The Department's smoothness testing results will be used in determining payment adjustments and areas requiring Corrective Work.

5.1 Testing Schedule. Smoothness testing will be conducted within 10 calendar days following completion of final paving, provided there are no situations present which restrict access to the test site with the profiler equipment. Additional time may be required to conduct testing if weather conditions are unfavorable. Efforts will be made to collect smoothness data within the 10 day period, however, in the event of inclement weather, smoothness testing may be delayed until conditions are favorable. Such delays shall not constitute grounds for a claim from the Contractor.

5.2 Profile Measurements. The profiler will conduct three (3) complete passes in each lane, recording the right and left wheel path IRI values simultaneously at 10 metre intervals. The final IRI will be the average of the three passes reported at 10 metre intervals. The 100 metre interval averages will then be computed from the 10 metre interval average IRI values. The point at skewed pavement locations where testing will start/end will be the where the full pavement width occurs across all lanes including paved shoulders.

5.3 Exclusions. The 10 metre segments at both ends of the section under contract will be excluded from smoothness calculations. Bridges, underpass structures and overpass structures located within any 10 metre segment, including the 10 metre segments immediately before and after the structure shall be excluded from payment adjustments under this specification.

Individual contract sections less than 500 metres in length or areas requiring hand work, tapers, intersections, gore areas, aprons, etc. will be excluded from this specification.

Individual 10 metre segments exhibiting roughness, which can be directly attributed to physical features of the roadway including iron works or curb/gutter match-ins, will be excluded from payment adjustments.

6.0 PAYMENT ADJUSTMENTS

The Engineer will provide the Contractor with a copy of the smoothness test results, including detailed payment adjustment summaries and Compulsory Corrective Work requirements, within 10 calendar days of original smoothness testing.

6.1 100 Metre Segments. Payment adjustments for 100 metre segments will be calculated based on the overall average IRI in mm/m for each 100 metre segment in each lane in accordance with Table 6.1.

Table 6.1

	Payment Adjustment for each 100 metre Segment in each Lane		
IRI (mm/m)	**Category A**	**Category B**	**Category C**
0.00 - 0.10	$1500.00	$950.00	$1010.00
0.11 - 0.20	$1340.00	$860.00	$920.00
0.21 - 0.30	$1160.00	$770.00	$830.00
0.31 - 0.40	$980.00	$670.00	$740.00
0.41 - 0.50	$800.00	$570.00	$650.00
0.51 - 0.60	$610.00	$470.00	$560.00
0.61 - 0.70	$410.00	$370.00	$460.00
0.71 - 0.80	$200.00	$270.00	$360.00
0.81 - 0.90	($20.00)	$160.00	$260.00
0.91 - 1.00	($250.00)	$50.00	$150.00
1.01 - 1.10	($490.00)	($70.00)	$50.00
1.11 - 1.20	($760.00)	($190.00)	($60.00)
1.21 - 1.30	($1040.00)	($320.00)	($190.00)
1.31 - 1.40	($1350.00)	($450.00)	($310.00)
1.41 - 1.50	($1700.00)	($590.00)	($440.00)
1.51 - 1.60	($2110.00)	($740.00)	($570.00)
1.61 - 1.70	($2630.00)	($900.00)	($720.00)
1.71 - 1.80	($3800.00)	($1070.00)	($870.00)
1.81 - 1.90	($4690.00)	($1260.00)	($1040.00)
1.91 - 2.00	($4700.00)	($1480.00)	($1220.00)
2.01 - 2.10	($4700.00)	($1720.00)	($1430.00)
2.11 - 2.20	($4700.00)	($2040.00)	($1670.00)
2.21 - 2.30	($4700.00)	($2750.00)	($1980.00)
2.31 - 2.40	($4700.00)	($3290.00)	($2670.00)
2.41 - 2.50	($4700.00)	($3300.00)	($3190.00)
2.51 - 3.00	($4700.00)	($3300.00)	($3200.00)

6.2 Localized Roughness. With the exception of areas described in Item 5.3, each 10 metre segment with an IRI value greater than those shown in Table 6.2 shall be defined as localized roughness, resulting in negative payment adjustments. The total localized roughness payment adjustment shall be the numerical summation of all the individual localized roughness payment adjustments for the defined section of

Roadway.

Table 6.2

Roadway Classification	Localized Roughness IRI (mm/m) for 10 metre Segments	Payment Adjustment (for each occurrence)
Category A	> 1.10	($250)
Category B	> 1.40	($250)
Category C	> 1.50	($250)

6.3 Total Payment Adjustments. The total payment adjustment shall be the summation of all the individual payment adjustments for each 100 metre segment in each lane, including localized roughness payment adjustments. If the total 100 metre segment payment adjustment is a positive value (bonus), the Contractor will be assessed the total 100 metre segment payment adjustment, and the total localized roughness payment adjustment for the defined section of roadway. The corresponding amount will be paid to the Contractor on the final estimate.

If the total 100 metre segment payment adjustment is a negative value (penalty), the Contractor will be assessed either the total 100 metre segment payment adjustment or the total localized roughness payment adjustment, whichever is numerically less (i.e. whichever results in a greater penalty to the Contractor). The two penalties shall not be applied in summation. The corresponding amount will be recovered from the Contractor on the final estimate.

6.4 Segments Less Than 100 Metres. For segments less than 100 metres in length, price adjustments will be determined from 10 metre segments that are not subject to exclusions as described in Item 5.3. Payment adjustments under Item 6.1 and Item 6.2 shall apply to these areas based on the actual number of 10 metre segments that are not excluded. Price adjustments shall be prorated based on the number of non-excluded 10 metre segments in the 100 metre segment, as detailed in Table 6.1.

Example 1: Category A Roadway
80 metre Segment (Station 7+720 - 7+800)
Exclusions apply in 4 of the individual 10 m segments (20 m bridge + 10 m at each end)

10 Meter Segment	IRI (mm/m)	Exclusion Applies? (yes/no)	Localized Roughness Payment Adjustment	Average IRI over 60 metre Segment	IRI Payment Adjustment (See Table 6.1)	Total Payment Adjustment (for this 60 metre Segment)
7+720 - 7+730	0.34	No	$0	(0.34 + 0.23 + 0.28 + 1.12)/4 = 0.49	+$800 x 4/10 = +$320	+$320 - $250 = +$70
7+730 - 7+740	0.23	No	$0			
7+740 - 7+750	0.28	No	$0			
7+750 - 7+760	1.15	Yes (Bridge Approach)	$0			
7+760 - 7+770	1.86	Yes (Bridge)	$0			
7+770 - 7+780	2.43	Yes (Bridge)	$0			
7+780 - 7+790	0.91	Yes (Bridge Approach)	$0			
7+790 - 7+800	1.12	No	-$250			

Example 2: Category B Roadway
30 metre Segment (Station 6+420 - 6+450) at end of paving section
Exclusions Apply in 1 of the individual 10 m segments

10 Meter Segment	IRI (mm/m)	Exclusion Applies? (yes/no)	Localized Roughness Payment Adjustment	Average IRI over 30 metre Segment	IRI Payment Adjustment (See Table 6.1)	Total Payment Adjustment (for this 30 metre Segment)
6+420 - 6+430	0.88	No	$0	(0.88 + 1.45)/2 = 1.16	-$190 x 2/10 = -$38	-$38 - $250 = -$288
6+430 - 6+440	1.45	No	-$250			
6+440 - 6+450	1.65	Yes (Manhole)	$0			

7.0 CORRECTIVE WORK

Corrective Work shall include Compulsory Corrective Work or Mandatory Penalties as defined in Items 7.1 and 7.2. All Corrective Work shall be subject to a Mandatory Penalty, unless otherwise directed by the Engineer. Corrective work shall be carried out as defined in Item 7.3 and at the Contractor's expense. The Contractor shall only be allowed one (1) attempt to perform Compulsory Corrective Work.

7.1 Compulsory Corrective Work. Except for areas defined in Item 5.3, all 10 metre segments with an IRI > 3.00 mm/m shall be subject to a Mandatory Penalty unless otherwise directed by the Engineer.

7.1.1 Mandatory Penalty. Where Compulsory Corrective Work is indicated, the Contractor shall be subject to a $4000.00 Mandatory Penalty for each occurrence.

The Department reserves the right to require the Contractor to perform Corrective Work at the Engineer's discretion.

7.2 Optional Corrective Work. The Contractor shall be permitted to carry out corrective work via diamond grinding on any 100 metre segment with average IRI values as defined in Table 7.2.

Table 7.2

	Category A	Category B	Category C
I (mm/m) on 100 m Segments where Corrective Work is Permitted	1.80 - 3.00	2.30 - 3.00	2.40 - 3.00

7.3 Corrective Work Procedures. Corrective work shall consist of Removal and Replacement of the surface course of asphalt concrete pavement. The minimum length of any repair area shall be 10 metres.

7.3.1 Removal and Replacement. On each of the 10 metre segments affected, the Contractor shall remove (by cold planing) and replace the full width of the lane and the full depth of the surface course of asphalt concrete pavement affected, including paved shoulders.

7.3.2 Asphalt Concrete Mix Requirements. The asphalt concrete mix used to construct the surface course shall conform to either Division 4, Section 4 or Division 4, Section 19 of the Department's Standard Specification, as stated in the Contract.

7.3.3 Incidental Corrective Work. Corrective Work may result in additional incidental costs, including but not limited to: tack coat, additional shoulder gravelling, guardrail adjustments, re-application of pavement markings, etc. Such work shall be carried out in accordance with the Department's specifications and at the Contractor's expense.

7.3.4 Disposal of Asphalt Concrete. Asphalt concrete that has been removed as a result of Corrective Work undertaken by the Contractor shall become the property of the Contractor to haul, stockpile or otherwise dispose of in an environmentally acceptable manner, at the Contractor's expense.

7.5 Costs for Corrective Work. All costs associated with Corrective Work, including retesting, shall be the responsibility of the Contractor.

8.0 APPEALS

The Contractor may appeal the original smoothness test results only once, for either the entire section under contract if the overall price adjustment is a negative value (penalty), or for one or more of the 10 metre segments where Compulsory Corrective Work apply or for one or more of the 100 metre segments where Optional Corrective Work apply.

8.1 Timing of Appeals. Appeals shall be received by the Engineer within 48 hours of the Contractor's receipt of the original smoothness test results.

8.2 Appeal of Compulsory/Optional Corrective Work Segments. The Department will retest each of the 100 metre segments which contain appealed Compulsory or Optional Corrective Work segments.

Retesting will be conducted in accordance with Item 5.0 of this specification, within 10 calendar days of receipt of written appeal notification. Efforts will be made to collect smoothness data within the 10 day period, however, in the event of inclement weather, smoothness testing may have to be delayed until conditions are favorable. Such delays shall not constitute grounds for a claim from the Contractor.

New IRI summaries, including the results of the appealed area(s), will be completed in accordance with Item 5.2, and the results will be used to recalculate payment adjustments and identify areas requiring Corrective Work. These results shall be binding and no further appeals will be granted.

If the new test results, after the appeal testing, verify that one or more of the segments no longer requires Corrective Work, the Department shall be responsible for all appeal testing costs. Otherwise, the Contractor shall be responsible for all appeal testing costs.

8.3 Appeal of Entire Section. The Department will retest the entire section under contract, in accordance with Item 5.0 of this specification, within 10 calendar days of receipt of written appeal notification. Efforts will be made to collect smoothness data within the 10 day period, however, in the event of inclement weather, smoothness testing may have to be delayed until conditions are favorable. Such delays shall not constitute grounds for a claim from the Contractor.

New IRI summaries, using only the new test results, will be completed for the entire section, in accordance with Item 5.2, and the results will be used to recalculate payment adjustments and identify areas requiring corrective work for the entire section. The new results shall be binding and no further appeals will be granted.

If the new test results, after the appeal testing, verify that there is still a negative overall payment adjustment (penalty), the Contractor shall be responsible for all appeal testing costs.